Exhibit A

Proposed Reliability Standards

Exhibit A-1

Proposed Reliability Standard PRC-004-5

PRC-004-5 Clean

A. Introduction

1. **Title: Protection System Misoperation Identification and Correction**

2. **Number:** PRC-004-5

3. **Purpose:** Identify and correct the causes of Misoperations of Protection Systems for Bulk Electric System (BES) Elements.

4. **Applicability:**

   4.1. Functional Entities:

   4.1.1 Transmission Owner

   4.1.2 Generator Owner

   4.1.3 Distribution Provider

   4.2. Facilities:

   4.2.1 Protection Systems for BES Elements, with the following exclusions:

   4.2.1.1 Non-protective functions that are embedded within a Protection System.

   4.2.1.2 Protective functions intended to operate as a control function during switching.[1]

   4.2.1.3 Special Protection Systems (SPS).

   4.2.1.4 Remedial Action Schemes (RAS).

   4.2.1.5 Protection Systems of individual dispersed power producing resources identified under Inclusion I4 of the BES definition where the Misoperations affected an aggregate nameplate rating of less than or equal to 75 MVA of BES Facilities.

   4.2.2 Underfrequency load shedding (UFLS) that is intended to trip one or more BES Elements.

   4.2.3 Undervoltage load shedding (UVLS) that is intended to trip one or more BES Elements.

5. **Effective Date:** See Project 2008-02.2 Implementation Plan.

.

[1] For additional information and examples, see the "Non-Protective Functions" and "Control Functions" sections in the Application Guidelines.

B. Requirements and Measures

R1. Each Transmission Owner, Generator Owner, and Distribution Provider that owns a BES interrupting device that operated under the circumstances in Parts 1.1 through 1.3 shall, within 120 calendar days of the BES interrupting device operation, identify whether its Protection System component(s) caused a Misoperation: *[Violation Risk Factor: Medium][Time Horizon: Operations Assessment, Operations Planning]*

1.1 The BES interrupting device operation was caused by a Protection System or by manual intervention in response to a Protection System failure to operate; and

1.2 The BES interrupting device owner owns all or part of the Composite Protection System; and

1.3 The BES interrupting device owner identified that its Protection System component(s) caused the BES interrupting device(s) operation or was caused by manual intervention in response to its Protection System failure to operate.

M1. Each Transmission Owner, Generator Owner, and Distribution Provider shall have dated evidence that demonstrates it identified the Misoperation of its Protection System component(s), if any, that meet the circumstances in Requirement R1, Parts 1.1, 1.2, and 1.3 within the allotted time period. Acceptable evidence for Requirement R1, including Parts 1.1, 1.2, and 1.3 may include, but is not limited to the following dated documentation (electronic or hardcopy format): reports, databases, spreadsheets, emails, facsimiles, lists, logs, records, declarations, analyses of sequence of events, relay targets, Disturbance Monitoring Equipment (DME) records, test results, or transmittals.

R2. Each Transmission Owner, Generator Owner, and Distribution Provider that owns a BES interrupting device that operated shall, within 120 calendar days of the BES interrupting device operation, provide notification as described in Parts 2.1 and 2.2. *[Violation Risk Factor: Medium][Time Horizon: Operations Assessment, Operations Planning]*

2.1 For a BES interrupting device operation by a Composite Protection System or by manual intervention in response to a Protection System failure to operate, notification of the operation shall be provided to the other owner(s) that share Misoperation identification responsibility for the Composite Protection System under the following circumstances:

2.1.1 The BES interrupting device owner shares the Composite Protection System ownership with any other owner; and

2.1.2 The BES interrupting device owner has determined that a Misoperation occurred or cannot rule out a Misoperation; and

2.1.3 The BES interrupting device owner has determined that its Protection System component(s) did not cause the BES interrupting device(s) operation or cannot determine whether its Protection System components caused the BES interrupting device(s) operation.

2.2 For a BES interrupting device operation by a Protection System component intended to operate as backup protection for a condition on another entity's BES Element, notification of the operation shall be provided to the other Protection System owner(s) for which that backup protection was provided.

M2. Each Transmission Owner, Generator Owner, and Distribution Provider shall have dated evidence that demonstrates notification to the other owner(s), within the allotted time period for either Requirement R2, Part 2.1, including subparts 2.1.1, 2.1.2, and 2.1.3 and Requirement R2, Part 2.2. Acceptable evidence for Requirement R2, including Parts 2.1 and 2.2 may include, but is not limited to the following dated documentation (electronic or hardcopy format): emails, facsimiles, or transmittals.

R3. Each Transmission Owner, Generator Owner, and Distribution Provider that receives notification, pursuant to Requirement R2 shall, within the later of 60 calendar days of notification or 120 calendar days of the BES interrupting device(s) operation, identify whether its Protection System component(s) caused a Misoperation. *[Violation Risk Factor: Medium][Time Horizon: Operations Assessment, Operations Planning]*

M3. Each Transmission Owner, Generator Owner, and Distribution Provider shall have dated evidence that demonstrates it identified whether its Protection System component(s) caused a Misoperation within the allotted time period. Acceptable evidence for Requirement R3 may include, but is not limited to the following dated documentation (electronic or hardcopy format): reports, databases, spreadsheets, emails, facsimiles, lists, logs, records, declarations, analyses of sequence of events, relay targets, DME records, test results, or transmittals.

R4. Each Transmission Owner, Generator Owner, and Distribution Provider that has not determined the cause(s) of a Misoperation, for a Misoperation identified in accordance with Requirement R1 or R3, shall perform investigative action(s) to determine the cause(s) of the Misoperation at least once every two full calendar quarters after the Misoperation was first identified, until one of the following completes the investigation: *[Violation Risk Factor: Medium] [Time Horizon: Operations Assessment, Operations Planning]*

- The identification of the cause(s) of the Misoperation; or
- A declaration that no cause was identified.

M4. Each Transmission Owner, Generator Owner, and Distribution Provider shall have dated evidence that demonstrates it performed at least one investigative action according to Requirement R4 every two full calendar quarters until a cause is identified or a declaration is made. Acceptable evidence for Requirement R4 may include, but is not limited to the following dated documentation (electronic or hardcopy format): reports, databases, spreadsheets, emails, facsimiles, lists, logs, records, declarations, analyses of sequence of events, relay targets, DME records, test results, or transmittals.

R5. Each Transmission Owner, Generator Owner, and Distribution Provider that owns the Protection System component(s) that caused the Misoperation shall, within 60 calendar days of first identifying a cause of the Misoperation: [*Violation Risk Factor: Medium*] [*Time Horizon: Operations Planning, Long-Term Planning*]

- Develop a Corrective Action Plan (CAP) for the identified Protection System component(s), and an evaluation of the CAP's applicability to the entity's other Protection Systems including other locations; or
- Explain in a declaration why corrective actions are beyond the entity's control or would not improve BES reliability, and that no further corrective actions will be taken.

M5. Each Transmission Owner, Generator Owner, and Distribution Provider shall have dated evidence that demonstrates it developed a CAP and an evaluation of the CAP's applicability to other Protection Systems and locations, or a declaration in accordance with Requirement R5. Acceptable evidence for Requirement R5 may include, but is not limited to the following dated documentation (electronic or hardcopy format): CAP and evaluation, or declaration.

R6. Each Transmission Owner, Generator Owner, and Distribution Provider shall implement each CAP developed in Requirement R5, and update each CAP if actions or timetables change, until completed. *[Violation Risk Factor: Medium][Time Horizon: Operations Planning, Long-Term Planning]*

M6. Each Transmission Owner, Generator Owner, and Distribution Provider shall have dated evidence that demonstrates it implemented each CAP, including updating actions or timetables. Acceptable evidence for Requirement R6 may include, but is not limited to the following dated documentation (electronic or hardcopy format): records that document the implementation of each CAP and the completion of actions for each CAP including revision history of each CAP. Evidence may also include work management program records, work orders, and maintenance records.

C. Compliance

1. Compliance Monitoring Process

1.1. Compliance Enforcement Authority

As defined in the NERC Rules of Procedure, "Compliance Enforcement Authority" (CEA) means NERC or the Regional Entity in their respective roles of monitoring and enforcing compliance with the NERC Reliability Standards.

1.2. Evidence Retention

The following evidence retention periods identify the period of time an entity is required to retain specific evidence to demonstrate compliance. For instances where the evidence retention period specified below is shorter than the time since the last audit, the CEA may ask an entity to provide other evidence to show that it was compliant for the full time period since the last audit.

The Transmission Owner, Generator Owner, and Distribution Provider shall keep data or evidence to show compliance as identified below unless directed by its CEA to retain specific evidence for a longer period of time as part of an investigation.

The Transmission Owner, Generator Owner, and Distribution Provider shall retain evidence of Requirements R1, R2, R3, and R4, Measures M1, M2, M3, and M4 for a minimum of 12 calendar months following the completion of each Requirement.

The Transmission Owner, Generator Owner, and Distribution Provider shall retain evidence of Requirement R5, Measure M5, including any supporting analysis per Requirements R1, R2, R3, and R4, for a minimum of 12 calendar months following completion of each CAP, completion of each evaluation, and completion of each declaration.

The Transmission Owner, Generator Owner, and Distribution Provider shall retain evidence of Requirement R6, Measure M6 for a minimum of 12 calendar months following completion of each CAP.

If a Transmission Owner, Generator Owner, or Distribution Provider is found non-compliant, it shall keep information related to the non-compliance until mitigation is complete and approved, or for the time specified above, whichever is longer.

The CEA shall keep the last audit records and all requested and submitted subsequent audit records.

1.3. Compliance Monitoring and Assessment Processes

Compliance Audit

Self-Certification

Spot Checking

Compliance Investigation

Self-Reporting

Complaint

1.4. Additional Compliance Information

None**.**

D. Table of Compliance Elements

R#	Time Horizon	VRF	Violation Severity Levels			
			Lower VSL	Moderate VSL	High VSL	Severe VSL
R1	Operations Assessment, Operations Planning	Medium	The responsible entity identified whether its Protection System component(s) caused a Misoperation in accordance with Requirement R1, but in more than 120 calendar days and less than or equal to 150 calendar days of the BES interrupting device operation.	The responsible entity identified whether its Protection System component(s) caused a Misoperation in accordance with Requirement R1, but in more than 150 calendar days and less than or equal to 165 calendar days of the BES interrupting device operation.	The responsible entity identified whether its Protection System component(s) caused a Misoperation in accordance with Requirement R1, but in more than 165 calendar days and less than or equal to 180 calendar days of the BES interrupting device operation.	The responsible entity identified whether its Protection System component(s) caused a Misoperation in accordance with Requirement R1, but in more than 180 calendar days of the BES interrupting device operation. OR The responsible entity failed to identify whether its Protection System component(s) caused a Misoperation in accordance with Requirement R1.

R #	Time Horizon	VRF	Violation Severity Levels			
			Lower VSL	Moderate VSL	High VSL	Severe VSL
R2	Operations Assessment, Operations Planning	Medium	The responsible entity notified the other owner(s) of the Protection System component(s) in accordance with Requirement R2, but in more than 120 calendar days and less than or equal to 150 calendar days of the BES interrupting device operation.	The responsible entity notified the other owner(s) of the Protection System component(s) in accordance with Requirement R2, but in more than 150 calendar days and less than or equal to 165 calendar days of the BES interrupting device operation.	The responsible entity notified the other owner(s) of the Protection System component(s) in accordance with Requirement R2, but in more than 165 calendar days and less than or equal to 180 calendar days of the BES interrupting device operation.	The responsible entity notified the other owner(s) of the Protection System component(s) in accordance with Requirement R2, but in more than 180 calendar days of the BES interrupting device operation. OR The responsible entity failed to notify one or more of the other owner(s) of the Protection System component(s) in accordance with Requirement R2.

R#	Time Horizon	VRF	Violation Severity Levels			
			Lower VSL	Moderate VSL	High VSL	Severe VSL
R3	Operations Assessment, Operations Planning	Medium	The responsible entity identified whether or not its Protection System component(s) caused a Misoperation in accordance with Requirement R3, but was less than or equal to 30 calendar days late.	The responsible entity identified whether or not its Protection System component(s) caused a Misoperation in accordance with Requirement R3, but was greater than 30 calendar days and less than or equal to 45 calendar days late.	The responsible entity identified whether or not its Protection System component(s) caused a Misoperation in accordance with Requirement R3, but was greater than 45 calendar days and less than or equal to 60 calendar days late.	The responsible entity identified whether or not its Protection System component(s) caused a Misoperation in accordance with Requirement R3, but was greater than 60 calendar days late. OR The responsible entity failed to identify whether or not a Misoperation of its Protection System component(s) occurred in accordance with Requirement R3.

R #	Time Horizon	VRF	Violation Severity Levels			
			Lower VSL	Moderate VSL	High VSL	Severe VSL
R4	Operations Assessment, Operations Planning	Medium	The responsible entity performed at least one investigative action in accordance with Requirement R4, but was less than or equal to one calendar quarter late.	The responsible entity performed at least one investigative action in accordance with Requirement R4, but was greater than one calendar quarter and less than or equal to two calendar quarters late.	The responsible entity performed at least one investigative action in accordance with Requirement R4, but was greater than two calendar quarters and less than or equal to three calendar quarters late.	The responsible entity performed at least one investigative action in accordance with Requirement R4, but was more than three calendar quarters late. OR The responsible entity failed to perform investigative action(s) in accordance with Requirement R4.

R#	Time Horizon	VRF	Violation Severity Levels			
			Lower VSL	Moderate VSL	High VSL	Severe VSL
R5	Operations Planning, Long-Term Planning	Medium	The responsible entity developed a CAP, or explained in a declaration in accordance with Requirement R5, but in more than 60 calendar days and less than or equal to 70 calendar days of first identifying a cause of the Misoperation. OR (See next page)	The responsible entity developed a CAP, or explained in a declaration in accordance with Requirement R5, but in more than 70 calendar days and less than or equal to 80 calendar days of first identifying a cause of the Misoperation. OR (See next page)	The responsible entity developed a CAP, or explained in a declaration in accordance with Requirement R5, but in more than 80 calendar days and less than or equal to 90 calendar days of first identifying a cause of the Misoperation. OR (See next page)	The responsible entity developed a CAP, or explained in a declaration in accordance with Requirement R5, but in more than 90 calendar days of first identifying a cause of the Misoperation. OR The responsible entity failed to develop a CAP or explain in a declaration in accordance with Requirement R5. OR (See next page)

R #	Time Horizon	VRF	Violation Severity Levels			
			Lower VSL	Moderate VSL	High VSL	Severe VSL
R5	(Continued)		The responsible entity developed an evaluation in accordance with Requirement R5, but in more than 60 calendar days and less than or equal to 70 calendar days of first identifying a cause of the Misoperation.	The responsible entity developed an evaluation in accordance with Requirement R5, but in more than 70 calendar days and less than or equal to 80 calendar days of first identifying a cause of the Misoperation.	The responsible entity developed an evaluation in accordance with Requirement R5, but in more than 80 calendar days and less than or equal to 90 calendar days of first identifying a cause of the Misoperation.	The responsible entity developed an evaluation in accordance with Requirement R5, but in more than 90 calendar days of first identifying a cause of the Misoperation. OR The responsible entity failed to develop an evaluation in accordance with Requirement R5.
R6	Operations Planning, Long-Term Planning	Medium	The responsible entity implemented, but failed to update a CAP, when actions or timetables changed, in accordance with Requirement R6.	N/A	N/A	The responsible entity failed to implement a CAP in accordance with Requirement R6.

E. Regional Variances

None.

F. Interpretations

None.

G. Associated Documents

NERC System Protection and Controls Subcommittee of the NERC Planning Committee, Assessment of Standards: PRC-003-1 – Regional Procedure for Analysis of Misoperations of Transmission and Generation Protection Systems, PRC-004-1 – Analysis and Mitigation of Transmission and Generation Protection Misoperations, PRC-016-1 – Special Protection System Misoperations, May 22, 2009.[2]

Version History

Version	Date	Action	Change Tracking
0	April 1, 2005	Effective Date	New
1	December 1, 2005	1. Changed incorrect use of certain hyphens (-) to "en dash" (–) and "em dash (—)." 2. Added "periods" to items where appropriate. 3. Changed "Timeframe" to "Time Frame" in item D, 1.2.	01/20/06
1a	February 17, 2011	Adopted by NERC Board of Trustees	Project 2009-17 interpretation adding Appendix 1- Interpretation regarding applicability of standard to protection of radially connected transformers
1a	September 26, 2011	Appended FERC- approved interpretation of R1 and R3 to version 1	FERC's Order approving the interpretation of R1 and R3 is effective as of September 26, 2011

[2] (http://www.nerc.com/comm/PC/System%20Protection%20and%20Control%20Subcommittee%20SPCS%20DL/PRC-003-004-016%20Report.pdf).

Version	Date	Action	Change Tracking
2	August 5, 2010	Adpoted by NERC Board of Trustees	Project 2010-12 modifications to address Order No. 693 Directives contained in paragraph 1469
2a	September 26, 2011	Appended FERC-approved interpretation of R1 and R3 to version 2	FERC's Order approving the interpretation of R1 and R3 is effective as of September 26, 2011
2.1a	February 9, 2012	Adopted by NERC Board of Trustees	Errata change under Project 2010-07 to add "…and generator interconnection Facility…"
3	August 14, 2014	Adopted by NERC Board of Trustees	Revision under Project 2010-05.1
4	November 13, 2014	Adopted by NERC Board of Trustees	Applicability revised in Project 2014-01 to clarify application of Requirements to BES dispersed power producing resources
5	May 7, 2015	Adopted by NERC Board of Trustees	Revision under Project 2008-02.2

Guidelines and Technical Basis

Introduction

This standard addresses the reliability issues identified in the letter[3] from Gerry Cauley, NERC President and CEO, dated January 7, 2011.

> "Nearly all major system failures, excluding perhaps those caused by severe weather, have misoperations of relays or automatic controls as a factor contributing to the propagation of the failure. …Relays can misoperate, either operate when not needed or fail to operate when needed, for a number of reasons. First, the device could experience an internal failure – but this is rare. Most commonly, relays fail to operate correctly due to incorrect settings, improper coordination (of timing and set points) with other devices, ineffective maintenance and testing, or failure of communications channels or power supplies. Preventable errors can be introduced by field personnel and their supervisors or more programmatically by the organization."

The standard also addresses the findings in the *2011 Risk Assessment of Reliability Performance*[4]; July 2011.

> "…a number of multiple outage events were initiated by protection system Misoperations. These events, which go beyond their design expectations and operating procedures, represent a tangible threat to reliability. A deeper review of the root causes of dependent and common mode events, which include three or more automatic outages, is a high priority for NERC and the industry."

The *State of Reliability 2014*[5] report continued to identify Protection System Misoperations as a significant contributor to automatic transmission outage severity. The report recommended completion of the development of PRC-004-3 as part of the solution to address Protection System Misoperations.

Definitions

The Misoperation definition is based on the IEEE/PSRC Working Group I3 "Transmission Protective Relay System Performance Measuring Methodology[6]." Misoperations of a Protection System include failure to operate, slowness in operating, or operating when not required either during a Fault or non-Fault condition.

---

[3] (http://www.nerc.com/pa/Stand/Project%20201005%20Protection%20System%20Misoperations%20DL/20110209130708-Cauley%20letter.pdf).

[4] "2011 Risk Assessment of Reliability Performance." NERC. (http://www.nerc.com/files/2011_RARPR_FINAL.pdf. July 2011). Pg. 3.

[5] "State of Reliability 2014." NERC. (http://www.nerc.com/pa/Stand/Pages/RelaibilityCoordinationProject20066.aspx). May 2014. Pg. 18 of 106.

[6] "Transmission Protective Relay System Performance Measuring Methodology." Working Group I3 of Power System Relaying Committee of IEEE Power Engineering Society. 1999.

For reference, a "Protection System" is defined in the *Glossary of Terms Used in NERC Reliability Standards* ("NERC Glossary") as:

- Protective relays which respond to electrical quantities,
- Communications systems necessary for correct operation of protective functions,
- Voltage and current sensing devices providing inputs to protective relays,
- Station dc supply associated with protective functions (including station batteries, battery chargers, and non-battery-based dc supply), and
- Control circuitry associated with protective functions through the trip coil(s) of the circuit breakers or other interrupting devices.

A BES interrupting device is a BES Element, typically a circuit breaker or circuit switcher that has the capability to interrupt fault current. Although BES interrupting device mechanisms are not part of a Protection System, the standard uses the operation of a BES interrupting device by a Protection System to initiate the review for Misoperation.

The following two definitions are being proposed for inclusion in the NERC Glossary:

> **Composite Protection System –** *The total complement of Protection System(s) that function collectively to protect an Element. Backup protection provided by a different Element's Protection System(s) is excluded.*

The Composite Protection System definition is based on the principle that an Element's multiple layers of protection are intended to function collectively. This definition has been introduced in this standard and incorporated into the proposed definition of Misoperation to clarify that the overall performance of an Element's total complement of protection should be considered while evaluating an operation.

Composite Protection System – Line Example

The Composite Protection System of the Alpha-Beta line (Circuit #123) is comprised of current differential, permissive overreaching transfer trip (POTT), step distance (classic zone 1, zone 2, and zone 3), instantaneous-overcurrent, time-overcurrent, out-of-step, and overvoltage protection. The protection is housed at the Alpha and Beta substations, and includes the associated relays, communications systems, voltage and current sensing devices, DC supplies, and control circuitry.

Composite Protection System – Transformer Example

The Composite Protection System of the Alpha transformer (#2) is comprised of internal differential, overall differential, instantaneous-overcurrent, and time-overcurrent protection. The protection is housed at the Alpha substation, and includes the associated relays, voltage and current sensing devices, DC supplies, and control circuitry.

Composite Protection System – Generator Example

The Composite Protection System of the Beta generator (#3) is comprised of generator differential, overall differential, overcurrent, stator ground, reverse power, volts per hertz, loss-of-field, and undervoltage protection. The protection is housed at the Beta generating plant and at the Beta substation, and includes the associated relays, voltage and current sensing devices, DC supplies, and control circuitry.

Composite Protection System – Breaker Failure Example

Breaker failure protection provides backup protection for the breaker, and therefore is part of the breaker's Composite Protection System. Considering breaker failure protection to be part of another Element's Composite Protection System could lead to an incorrect conclusion that a breaker failure operation automatically satisfies the "Slow Trip" criteria of the Misoperation definition.

- An example of a correct operation of the breaker's Composite Protection System is when the breaker failure relaying tripped because the line relaying operated, but the breaker failed to clear the Fault. The breaker failure relaying operated because of a failed trip coil. The failed trip coil caused a Misoperation of the line's Composite Protection System.
- An example of a correct operation of the breaker's Composite Protection System is when the breaker failure relaying tripped because the line relaying operated, but the breaker failed to clear the Fault. Only the breaker failure relaying operated because of a failed breaker mechanism. This was not a Misoperation because the breaker mechanism is not part of the breaker's Composite Protection System.
- An example of an "Unnecessary Trip – During Fault" is when the breaker failure relaying tripped at the same time as the line relaying during a Fault. The Misoperation was due to the breaker failure timer being set to zero.

Misoperation – *The failure a Composite Protection System to operate as intended for protection purposes. Any of the following is a Misoperation:*

1. **Failure to Trip – During Fault** – *A failure of a Composite Protection System to operate for a Fault condition for which it is designed. The failure of a Protection System component is not a Misoperation as long as the performance of the Composite Protection System is correct.*
2. ***Failure to Trip – Other Than Fault*** *– A failure of a Composite Protection System to operate for a non-Fault condition for which it is designed, such as a power swing, undervoltage, overexcitation, or loss of excitation. The failure of a Protection System component is not a Misoperation as long as the performance of the Composite Protection System is correct.*

3. ***Slow Trip – During Fault*** *– A Composite Protection System operation that is slower than required for a Fault condition if the duration of its operating time resulted in the operation of at least one other Element's Composite Protection System.*
4. ***Slow Trip – Other Than Fault*** *– A Composite Protection System operation that is slower than required for a non-Fault condition, such as a power swing, undervoltage, overexcitation, or loss of excitation, if the duration of its operating time resulted in the operation of at least one other Element's Composite Protection System.*
5. ***Unnecessary Trip – During Fault*** *– An unnecessary Composite Protection System operation for a Fault condition on another Element.*
6. ***Unnecessary Trip – Other Than Fault*** *– An unnecessary Composite Protection System operation for a non-Fault condition. A Composite Protection System operation that is caused by personnel during on-site maintenance, testing, inspection, construction, or commissioning activities is not a Misoperation.*

The Misoperation definition is based on the principle that an Element's total complement of protection is intended to operate dependably and securely.

- Failure to automatically reclose after a Fault condition is not included as a Misoperation because reclosing equipment is not included within the definition of Protection System.
- A breaker failure operation does not, in itself, constitute a Misoperation.
- A remote backup operation resulting from a "Failure to Trip" or a "Slow Trip" does not, in itself, constitute a Misoperation.

This proposed definition of Misoperation provides additional clarity over the current version. A Misoperation is the failure of a Composite Protection System to operate as intended for protection purposes. The definition includes six categories which provide further differentiation of what constitutes a Misoperation. These categories are discussed in greater detail in the following sections.

Failure to Trip – During Fault

This category of Misoperation typically results in the Fault condition being cleared by remote backup Protection System operation.

> **Example 1a:** A failure of a transformer's Composite Protection System to operate for a transformer Fault is a Misoperation.
>
> **Example 1b:** A failure of a "primary" transformer relay (or any other component) to operate for a transformer Fault is not a "Failure to Trip – During Fault" Misoperation as long as another component of the transformer's Composite Protection System operated.
>
> **Example 1c:** A lack of target information does not by itself constitute a Misoperation. When a high-speed pilot system does not target because a high-speed zone element trips first, it would not in and of itself be a Misoperation.

Example 1d: A failure of an overall differential relay to operate is not a “Failure to Trip – During Fault” Misoperation as long as another component such as a generator differential relay operated.

Example 1e: The Composite Protection System for a bus does not operate during a bus Fault which results in the operation of all local transformer Protection Systems connected to that bus and all remote line Protection Systems connected to that bus isolating the faulted bus from the grid. The operation of the local transformer Protection Systems and the operation of all remote line Protection Systems correctly provided backup protection. There is one “Failure to Trip – During Fault” Misoperation of the bus Composite Protection System.

In analyzing the Protection System for Misoperation, the entity must also consider whether the “Slow Trip – During Fault” category applies to the operation.

Failure to Trip – Other Than Fault

This category of Misoperation may have resulted in operator intervention. The “Failure to Trip – Other Than Fault” conditions cited in the definition are examples only, and do not constitute an all-inclusive list.

Example 2a: A failure of a generator's Composite Protection System to operate for an unintentional loss of field condition is a Misoperation.

Example 2b: A failure of an overexcitation relay (or any other component) is not a "Failure to Trip – Other Than Fault" Misoperation as long as the generator's Composite Protection System operated as intended isolating the generator from the BES.

In analyzing the Protection System for Misoperation, the entity must also consider whether the “Slow Trip – Other Than Fault” category applies to the operation.

Slow Trip – During Fault

This category of Misoperation typically results in remote backup Protection System operation before the Fault is cleared.

Example 3a: A Composite Protection System that is slower than required for a Fault condition is a Misoperation if the duration of its operating time resulted in the operation of at least one other Element’s Composite Protection System. The current differential element of a multiple function relay failed to operate for a line Fault. The same relay's time-overcurrent element operated after a time delay. However, an adjacent line also operated from a time-overcurrent element. The faulted line's time-overcurrent element was found to be set to trip too slowly.

Example 3b: A failure of a breaker's Composite Protection System to operate as quickly as intended to meet the expected critical Fault clearing time for a line Fault in conjunction with a breaker failure (i.e., stuck breaker) is a Misoperation if it resulted in an unintended operation of at least one other Element's Composite Protection System. If a generating unit's Composite Protection System operates due to instability caused by the slow trip of the breaker's Composite Protection System, it is not an "Unnecessary Trip – During Fault" Misoperation of the generating unit's Composite Protection System. This event would be a "Slow Trip – During Fault" Misoperation of the breaker's Composite Protection System.

Example 3c: A line connected to a generation interconnection station is protected with two independent high-speed pilot systems. The Composite Protection System for this line also includes step distance and time-overcurrent schemes in addition to the two pilot systems. During a Fault on this line, the two pilot systems fail to operate and the time-overcurrent scheme operates clearing the Fault with no generating units or other Elements tripping (i.e., no over-trips). This event is not a Misoperation.

The phrase "slower than required" means the duration of its operating time resulted in the operation of at least one other Element's Composite Protection System. It would be impractical to provide a precise tolerance in the definition that would be applicable to every type of Protection System. Rather, the owner(s) reviewing each Protection System operation should understand whether the speed and outcome of its Protection System operation met their objective. The intent is not to require documentation of exact Protection System operation times, but to assure consideration of relay coordination and system stability by the owner(s) reviewing each Protection System operation.

The phrase "resulted in the operation of any other Composite Protection System" refers to the need to ensure that relaying operates in the proper or planned sequence (i.e., the primary relaying for a faulted Element operates before the remote backup relaying for the faulted Element).

In analyzing the Protection System for Misoperation, the entity must also consider the "Unnecessary Trip – During Fault" category to determine if an "unnecessary trip" applies to the Protection System operation of an Element other than the faulted Element.

If a coordination error was at the local terminal (i.e., set too slow), then it was a "Slow Trip," category of Misoperation at the local terminal.

Slow Trip – Other Than Fault

The phrase "slower than required" means the duration of its operating time resulted in the operation of at least one other Element's Composite Protection System. It would be impractical to provide a precise tolerance in the definition that would be applicable to every type of Protection System. Rather, the owner(s) reviewing each Protection System operation should understand whether the speed and outcome of its Protection System operation met their objective. The intent is not to require documentation of exact Protection System operation

times, but to assure consideration of relay coordination and system stability by the owner(s) reviewing each Protection System operation.

> **Example 4:** A phase to phase fault occurred on the terminals of a generator. The generator's Composite Protection System and a transmission line's Composite Protection System both operated in response to the fault. It was found during subsequent investigation that the generator protection contained an inappropriate time delay. This caused the transmission line's correctly set overreaching zone of protection to operate. This was a Misoperation of the generator's Composite Protection System, but not of the transmission line's Composite Protection System.

The "Slow Trip – Other Than Fault" conditions cited in the definition are examples only, and do not constitute an all-inclusive list.

Unnecessary Trip – During Fault

An operation of a properly coordinated remote Protection System is not in and of itself a Misoperation if the Fault has persisted for a sufficient time to allow the correct operation of the Composite Protection System of the faulted Element to clear the Fault. A BES interrupting device failure, a "failure to trip" Misoperation, or a "slow trip" Misoperation may result in a proper remote Protection System operation.

> **Example 5:** An operation of a transformer's Composite Protection System which trips (i.e., over-trips) for a properly cleared line Fault is a Misoperation. The Fault is cleared properly by the faulted equipment's Composite Protection System (i.e., line relaying) without the need for an external Protection System operation resulting in an unnecessary trip of the transformer protection; therefore, the transformer Protection System operation is a Misoperation.
>
> **Example 5b:** An operation of a line's Composite Protection System which trips (i.e., over-trips) for a properly cleared Fault on a different line is a Misoperation. The Fault is cleared properly by the faulted line's Composite Protection System (i.e., line relaying); however, elsewhere in the system, a carrier blocking signal is not transmitted (e.g., carrier ON/OFF switch found in OFF position) resulting in the operation of a remote Protection System, single-end trip of a non-faulted line. The operation of the Protection System for the non-faulted line is an unnecessary trip during a Fault. Therefore, the non-faulted line Protection System operation is an "Unnecessary Trip – During Fault" Misoperation.
>
> **Example 5c:** If a coordination error was at the remote terminal (i.e., set too fast), then it was an "Unnecessary Trip – During Fault" category of Misoperation at the remote terminal.

Unnecessary Trip – Other Than Fault

Unnecessary trips for non-Fault conditions include but are not limited to: power swings, overexcitation, loss of excitation, frequency excursions, and normal operations.

> **Example 6a:** An operation of a line's Composite Protection System due to a relay failure during normal operation is a Misoperation.
>
> **Example 6b:** Tripping a generator by the operation of the loss of field protection during an off-nominal frequency condition while the field is intact is a Misoperation assuming the Composite Protection System was not intended to operate under this condition.
>
> **Example 6c:** An impedance line relay trip for a power swing that entered the relay's characteristic is a Misoperation if the power swing was stable and the relay operated because power swing blocking was enabled and should have prevented the trip, but did not.
>
> **Example 6d:** Tripping a generator operating at normal load by the operation of a reverse power protection relay due to a relay failure is a Misoperation.

Additionally, an operation that occurs during a non-Fault condition but was initiated directly by on-site (i.e., real-time) maintenance, testing, inspection, construction, or commissioning is not a Misoperation.

> **Example 6e:** A BES interrupting device operation that occurs at the remote end of a line during a non-Fault condition because a direct transfer trip was initiated by system maintenance and testing activities at the local end of the line is not a Misoperation because of the maintenance exclusion in category 6 of the definition of "Misoperation."

The "on-site" activities at one location that initiates a trip to another location are included in this exemption. This includes operation of a Protection System when energizing equipment to facilitate measurements, such as verification of current circuits as a part of performing commissioning; however, once the maintenance, testing, inspection, construction, or commissioning activity associated with the Protection System is complete, the "on-site" Misoperation exclusion no longer applies, regardless of the presence of on-site personnel.

Special Cases

Protection System operations for these cases would not be a Misoperation.

> **Example 7a:** A generator Protection System operation prior to closing the unit breaker(s) is not a Misoperation provided no in-service Elements are tripped.

This type of operation is not a Misoperation because the generating unit is not synchronized and is isolated from the BES. Protection System operations that occur when the protected Element is out of service and that do not trip any in-service Elements are not Misoperations.

In some cases where zones of protection overlap, the owner(s) of Elements may decide to allow a Protection System to operate faster in order to gain better overall Protection System performance for an Element.

Example 7b: The high-side of a transformer connected to a line may be within the zone of protection of the supplying line's relaying. In this case, the line relaying is planned to protect the area of the high-side of the transformer and into its primary winding. In order to provide faster protection for the line, the line relaying may be designed and set to operate without direct coordination (or coordination is waived) with local protection for Faults on the high-side of the connected transformer. Therefore, the operation of the line relaying for a high-side transformer Fault operated as intended and would not be a Misoperation.

Below are examples of conditions that would be a Misoperation.

Example7c: A 230 kV shunt capacitor bank was released for operational service. The capacitor bank trips due to a settings error in the capacitor bank differential relay upon energization.

Example 7d: A 230/115 kV BES transformer bank trips out when being re-energized due to an incorrect operation of the transformer differential relay for inrush after being released for operational service. Only the high-side breaker opens since the low-side breaker had not yet been closed.

Non-Protective Functions

BES interrupting device operations which are initiated by non-protective functions, such as those associated with generator controls, excitation controls, or turbine/boiler controls, static voltampere-reactive compensators (SVC), flexible ac transmission systems (FACTS), high-voltage dc (HVdc) transmission systems, circuit breaker mechanisms, or other facility control systems are not operations of a Protection System. The standard is not applicable to non-protective functions such as automation (e.g., data collection) or control functions that are embedded within a Protection System.

Control Functions

The entity must make a determination as to whether the standard is applicable to each operation of its Protection System in accordance with the provided exclusions in the standard's Applicability, see Section 4.2.1. The subject matter experts (SME) developing this standard recognize that entities use Protection Systems as part of a routine practice to control BES Elements. This standard is not applicable to operation of protective functions within a Protection System when intended for controlling a BES Element as a part of an entity's process or planned switching sequence. The following are examples of conditions to which this standard is not applicable:

Example 8a: The reverse power protective function that operates to remove a generating unit from service using the entity's normal or routine process.

Example 8b: The reverse power relay enables a permissive trip and the generator operator trips the unit.

The standard is not applicable to operation of the protective relay because its operation is intended as a control function as part of a controlled shutdown sequence for the generator. However, the standard remains applicable to operation of the reverse power relay when it operates for conditions not associated with the controlled shutdown sequence, such as a motoring condition caused by a trip of the prime mover.

The following is another example of a condition to which this standard is not applicable:

> **Example 8c:** Operation of a capacitor bank interrupting device for voltage control using functions embedded within a microprocessor based relay that is part of a Protection System.

The above are examples only, and do not constitute an all-inclusive list to which the standard is not applicable.

Extenuating Circumstances

In the event of a natural disaster or other extenuating circumstances, the December 20, 2012 Sanction Guidelines of the North American Electric Reliability Corporation, Section 2.8, Extenuating Circumstances, reads: “In unique extenuating circumstances causing or contributing to the violation, such as significant natural disasters, NERC or the Regional Entity may significantly reduce or eliminate Penalties.” The Regional Entities to whom NERC has delegated authority will consider extenuating circumstances when considering any sanctions in relation to the timelines outlined in this standard.

The volume of Protection System operations tend to be sporadic. If a high rate of Protection System operations is not sustained, utilities will have an opportunity to catch up within the 120 day period.

Requirement Time Periods

The time periods within all the Requirements are distinct and separate. The applicable entity in Requirement R1 has 120 calendar days to identify whether a BES interrupting device operation is a Misoperation. Once the applicable entity has identified a Misoperation, it has completed its performance under Requirement R1. Identified Misoperations without an identified cause become subject to Requirement R4 and any subsequent Requirements as necessary. Identified Misoperations with an identified cause become subject to Requirement R5 and any subsequent Requirements as necessary.

In Requirement R2, the applicable entity has 120 calendar days, based on the date of the BES interrupting device operation, to provide notification to the other Protection System owners that meet the circumstances in Parts 2.1 and 2.2. For the case of an applicable entity that was notified (R3), it has the later of 120 calendar days from the date of the BES interrupting device operation or 60 calendar days of notification to identify whether its Protection System components caused a Misoperation.

Once a Misoperation is identified in either Requirement R1 or R3, and the applicable entity did not identify the cause(s) of the Misoperation, the time period for performing at least one investigative action every two full calendar quarters begins. The time period(s) in Requirement R4 resets upon each period. When the applicable entity's investigative actions identify the cause of the identified Misoperation or the applicable entity declares that no cause was found, the applicable entity has completed its performance in Requirement R4.

The time period in Requirement R5 begins when the Misoperation cause is first identified. The applicable entity is allotted 60 calendar days to perform one of the two activities listed in Requirement R5 (e.g., CAP or declaration) to complete its performance under Requirement R5.

Requirement R6 time period is determined by the actions and the associated timetable to complete those actions identified in the CAP. The time periods contained in the CAP may change from time to time and the applicable entity is required to update the timetable when it changes.

Time periods provided in the Requirements are intended to provide a reasonable amount of time to perform each Requirement. Performing activities in the least amount of time facilitates prompt identification of Misoperations, notification to other Protection System owners, identification of the cause(s), correction of the cause(s), and that important information is retained that may be lost due to time.

Requirement R1

This Requirement initiates a review of each BES interrupting device operation to identify whether or not a Misoperation may have occurred. Since the BES interrupting device owner typically monitors and tracks device operations, the owner is the logical starting point for identifying Misoperations of Protection Systems for BES Elements. A review is required when (1) a BES interrupting device operates that is caused by a Protection System or by manual intervention in response to a Protection System failure to operate, (2) regardless of whether the owner owns all or part of the Protection System component(s), and (3) the owner identified its Protection System component(s) as causing the BES interrupting device operation or was caused by manual intervention in response to its Protection System failure to operate.

Since most Misoperations result in the operation of one or more BES interrupting devices, these operations initiate a review to identify any Misoperation. If an Element is manually isolated in response to a failure to operate, the manual isolation of the Element triggers a review for Misoperation.

> **Example R1a:** The failure of a loss of field relay on a generating unit where an operator takes action to isolate the unit.

Manual intervention may indicate a Misoperation has occurred, thus requiring the initiation of an investigation by the BES interrupting device owner.

For the case where a BES interrupting device did not operate and remote clearing occurs due to the failure of a Composite Protection System to operate, the BES interrupting device owner would still review the operation under Requirement R1. However, if the BES interrupting device

owner determines that its Protection System component operated as backup protection for a condition on another entity's BES Element, the owner would provide notification of the operation to the other Protection System owner(s) under Requirement R2, Part 2.2.

Protection Systems are made of many components. These components may be owned by different entities. For example, a Generator Owner may own a current transformer that sends information to a Transmission Owner's differential relay. All of these components and many more are part of a Protection System. It is expected that all of the owners will communicate with each other, sharing information freely, so that Protection System operations can be analyzed, Misoperations identified, and corrective actions taken.

Each entity is expected to use judgment to identify those Protection System operations that meet the definition of Misoperation regardless of the level of ownership. A combination of available information from resources such as counters, relay targets, Supervisory Control and Data Acquisition (SCADA) systems, or DME would typically be used to determine whether or not a Misoperation occurred. The intent of the standard is to classify an operation as a Misoperation if the available information leads to that conclusion. In many cases, it will not be necessary to leverage all available data to determine whether or not a Misoperation occurred. The standard also allows an entity to classify an operation as a Misoperation if entity is not sure. The entity may decide to identify the operation as a Misoperation to satisfy Requirement R1 and continue its investigation for a cause of the Misoperation under Requirement R4. If the continued investigative actions are inconclusive, the entity may declare no cause found and end its investigation. The entity is allotted 120 calendar days from the date of its BES interrupting device operation to identify whether its Protection System component(s) caused a Misoperation.

The Protection System operation may be documented in a variety of ways such as in a report, database, spreadsheet, or list. The documentation may be organized in a variety of ways such as by BES interrupting device, protected Element, or Composite Protection System.

Repeated operations which occur during the same automatic reclosing sequence do not need a separate identification under Requirement R1. Repeated Misoperations which occur during the same 24-hour period do not need a separate identification under Requirement R1. This is consistent with the NERC *Misoperations Report*[7] which states:

> "In order to avoid skewing the data with these repeated events, the NERC SPCS should clarify, in the next annual update of the misoperation template, that all misoperations due to the same equipment and cause within a 24 hour period be recorded as one misoperation."

The following is an example of a condition that is not a Misoperation.

[7] "Misoperations Report." Reporting Multiple Occurrences. NERC Protection System Misoperations Task Force. (http://www.nerc.com/docs/pc/psmtf/PSMTF_Report.pdf). April 1, 2013. Pg. 37 of 40.

> **Example R1b:** A high impedance Fault occurs within a transformer. The sudden pressure relaying detects and operates for the Fault, but the differential relaying did not operate due to the low Fault current levels. This is not a Misoperation because the Composite Protection System was not required to operate because the Fault was cleared by the sudden pressure relay.

Requirement R2

Requirement R2 ensures notification of those who have a role in identifying Misoperations, but were not accounted for within Requirement R1. In the case of multi-entity ownership, the entity that owns the BES interrupting device that operated is expected to use judgment to identify those Protection System operations that meet the definition of Misoperation under Requirement R1; however, if the entity that owns a BES interrupting device determines that its Protection System component(s) did not cause the BES interrupting device(s) operation or cannot determine whether its Protection System components caused the BES interrupting device(s) operation, it must notify the other Protection System owner(s) that share Misoperation identification responsibility when the criteria in Requirement R2 is met.

This Requirement does not preclude the Protection System owners from initially communicating and working together to determine whether a Misoperation occurred and, if so, the cause. The BES interrupting device owner is only required to officially notify the other owners when it: (1) shares the Composite Protection System ownership with other entity(ies), (2) determines that a Misoperation occurred or cannot rule out a Misoperation, and (3) determines its Protection System component(s) did not cause a Misoperation or is unsure. Officially notifying the other owners without performing a preliminary review may unnecessarily burden the other owners with compliance obligations under Requirement R3, redirect valuable resources, and add little benefit to reliability. The BES interrupting device owner should officially notify other owners when appropriate within the established time period.

The following is an example of a notification to another Protection System owner:

> **Example R2a:** Circuit breakers A and B at the Charlie station tripped from directional comparison blocking (DCB) relaying on 03/03/2014 at 15:43 UTC during an external Fault. As discussed last week, the fault records indicate that a problem with your equipment (failure to transmit) caused the operation.

> **Example R2b:** A generator unit tripped out immediately upon synchronizing to the grid due to a Misoperation of its overcurrent protection. The Transmission Owner owns the 230 kV generator breaker that operated. The Transmission Owner, as the owner of the BES interrupting device after determining that its Protection System components did not cause the Misoperation, notified the Generator Owner of the operation. The Generator Owner investigated and determined that its Protection System components caused the Misoperation. In this example, the Generator Owner's Protection System components did cause the Misoperation. As the owner of the Protection System components that caused the Misoperation, the Generator Owner is responsible for creating and implementing the CAP.

A Composite Protection System owned by different functional entities within the same registered entity does not necessarily satisfy the notification criteria in Part 2.1.1 of Requirement R2. For example, if the same personnel within a registered entity perform the Misoperation identification for both the Generator Owner and Transmission Owner functions, then the Misoperation identification would be completely covered in Requirement R1, and therefore notification would not be required. However, if the Misoperation identification is handled by different groups, then notification would be required because the Misoperation identification would not necessarily be covered in Requirement R1.

> **Example R2c:** Line A Composite Protection System (owned by entity 1) failed to operate for an internal Fault. As a result, the zone 3 portion of Line B's Composite Protection System (owned by entity 2) and zone 3 portion of Line C's Composite Protection System (owned by entity 3) operated to clear the Fault. Entity 2 and 3 notified entity 1 of the remote zone 3 operation.

For the case where a BES interrupting device operates to provide backup protection for a non-BES Element, the entity reviewing the operation is not required to notify the other owners of Protection Systems for non-BES Elements. No notification is required because this Reliability Standard is not applicable to Protection Systems for non-BES Elements.

Requirement R3

For Requirement R3 (i.e., notification received), the entity that also owns a portion of the Composite Protection System is expected to use judgment to identify whether the Protection System operation is a Misoperation. A combination of available information from resources such as counters, relay targets, SCADA, DME, and information from the other owner(s) would typically be used to determine whether or not a Misoperation occurred. The intent of the standard is to classify an operation as a Misoperation if the available information leads to that conclusion. In many cases, it will not be necessary to leverage all available data to determine whether or not a Misoperation occurred. The standard also allows an entity to classify an operation as a Misoperation if an entity is not sure. The entity may decide to identify the operation as a Misoperation to satisfy Requirement R1 and continue its investigation for a cause of the Misoperation under Requirement R4. If the continued investigative actions are inconclusive, the entity may declare no cause found and end its investigation.

The entity that is notified by the BES interrupting device owner is allotted the later of 60 calendar days from receipt of notification or 120 calendar days from the BES interrupting device operation date to determine if its portion of the Composite Protection System caused the Protection System operation. It is expected that in most cases of a jointly owned Protection System, the entity making notification would have been in communication with the other owner(s) early in the process. This means that the shorter 60 calendar days only comes into play if the notification occurs in the second half of the 120 calendar days allotted to the BES interrupting device owner in Requirement R1.

The Protection System review may be organized in a variety of ways such as in a report, database, spreadsheet, or list. The documentation may be organized in a variety of ways such as by BES interrupting device, protected Element, or Composite Protection System. The BES interrupting device owner's notification received may be documented in a variety of ways such as an email or a facsimile.

Requirement R4

The entity in Requirement R4 (i.e., cause identification), whether it is the entity that owns the BES interrupting device or an entity that was notified, is expected to use due diligence in taking investigative action(s) to determine the cause(s) of an identified Misoperation for its portion of the Composite Protection System. The SMEs developing this standard recognize there will be cases where the cause(s) of a Misoperation will not be revealed during the allotted time periods in Requirements R1 or R3; therefore, Requirement R4 provides the entity a mechanism to continue its investigative work to determine the cause(s) of the Misoperation when the cause is not known.

A combination of available information from resources such as counters, relay targets, SCADA, DME, test results, and studies would typically be used to determine the cause of the Misoperation. At least one investigative action must be performed every two full calendar quarters until the investigation is completed.

The following is an example of investigative actions taken to determine the cause of an identified Misoperation:

> **Example R4a**: A Misoperation was identified on 03/18/2014. A line outage to test the Protection System was scheduled on 03/24/2014 for 12/15/2014 as the first investigative action (i.e., beyond the next two full calendar quarters) due to summer peak conditions. The protection engineer contacted the manufacturer on 04/10/2014 (i.e., within two full calendar quarters) to obtain any known issues. The engineer reviewed manufacturer's documents on 05/27/2014. The outage schedule was confirmed on 08/29/2014 and was taken on 12/15/2014. Testing was completed on 12/16/2014 (i.e., in the second two full quarters) revealing the microprocessor relay as the cause of the Misoperation. A CAP is being developed to replace the relay.

Periodic action minimizes compliance burdens and focuses the entity's effort on determining the cause(s) of the Misoperation while providing measurable evidence. The SMEs recognize

that certain planned investigative actions may require months or years to schedule and complete; therefore, the entity is only required to perform at least one investigative action every two full calendar quarters. If an investigative action is performed in the first quarter of a calendar year, the next investigative action would need to be performed by the end of the third calendar quarter. If an investigative action is performed in the last quarter of a calendar year, the next investigative action would need to be performed by the end of the second calendar quarter of the following calendar year. Investigative actions may include a variety of actions, such as reviewing DME records, performing or reviewing studies, completing relay calibration or testing, requesting manufacturer review, requesting an outage, or confirming a schedule.

The entity's investigation is complete when it identifies the cause of the Misoperation or makes a declaration that no cause was determined. The declaration is intended to be used if the entity determines that investigative actions have been exhausted or have not provided direction for identifying the Misoperation cause. Historically, approximately 12% of Misoperations are unknown or unexplainable.[8]

Although the entity only has to document its specific investigative actions taken to determine the cause(s) of an identified Misoperation, the entity should consider the benefits of formally organizing (e.g., in a report or database) its actions and findings. Well documented investigative actions and findings may be helpful in future investigations of a similar event or circumstances. A thorough report or database may contain a detailed description of the event, information gathered, investigative actions, findings, possible causes, identified causes, and conclusions. Multiple owners of a Composite Protection System might consider working together to produce a common report for their mutual benefit.

The following are examples of a declaration where no cause was determined:

> **Example R4b**: A Misoperation was identified on 04/11/2014. All relays at station A and B functioned properly during testing on 08/26/2014 as the first investigative action. The carrier system functioned properly during testing on 08/27/2014. The carrier coupling equipment functioned properly during testing on 08/28/2014. A settings review completed on 09/03/2014 indicated the relay settings were proper. Since the equipment involved in the operation functioned properly during testing, the settings were reviewed and found to be correct, and the equipment at station A and station B is already monitored. The investigation is being closed because no cause was found.
>
> **Example R4c:** A Misoperation was identified on 03/22/2014. The protection scheme was replaced before the cause was identified. The power line carrier or PLC based protection was replaced with fiber-optic based protection with an in-service date of 04/16/2014. The new system will be monitored for recurrence of the Misoperation.

[8] NERC System Protection and Control Subcommittee. Misoperations Report. April 1, 2013. (http://www.nerc.com/docs/pc/psmtf/PSMTF_Report.pdf). Figure 15: NERC Wide Misoperations by Cause Code. Pg. 22 of 40.

Requirement R5

Resolving the causes of Protection System Misoperations benefits BES reliability by preventing recurrence. The Corrective Action Plan (CAP) is an established tool for resolving operational problems. The NERC Glossary defines a Corrective Action Plan as, *"A list of actions and an associated timetable for implementation to remedy a specific problem."* Since a CAP addresses specific problems, the determination of what went wrong needs to be completed before developing a CAP. When the Misoperation cause is identified in Requirement R1, R3 or R4, Requirement R5 requires Protection System owner(s) to develop a CAP, or explain why corrective actions are beyond the entity's control or would not improve BES reliability. The entity must develop the CAP or make a declaration why additional actions are beyond the entity's control or would not improve BES reliability and that no further corrective actions will be taken within 60 calendar days of first determining a cause.

The SMEs developing this standard recognize there may be multiple causes for a Misoperation. In these circumstances, the CAP would include a remedy for the identified causes. The CAP may be revised if additional causes are found; therefore, the entity has the option to create a single or multiple CAP(s) to correct multiple causes of a Misoperation. The 60 calendar day period for developing a CAP (or declaration) is established on the basis of industry experience which includes operational coordination timeframes, time to consider alternative solutions, coordination of resources, and development of a schedule.

The development of a CAP is intended to document the specific corrective actions needed to be taken to prevent Misoperation recurrence, the timetable for executing such actions, and an evaluation of the CAP's applicability to the entity's other Protection Systems including other locations. The evaluation of these other Protection Systems aims to reduce the risk and likelihood of similar Misoperations in other Protection Systems. The Protection System owner is responsible for determining the extent of its evaluation concerning other Protection Systems and locations. The evaluation may result in the owner including actions to address Protection Systems at other locations or the reasoning for not taking any action. The CAP and an evaluation of other Protection Systems including other locations must be developed to complete Requirement R5.

The following is an example of a CAP for a relay Misoperation that was applying a standing trip due to a failed capacitor within the relay and the evaluation of the cause at similar locations which determined capacitor replacement was not necessary.

For completion of each CAP in Examples R5a through R5d, please see Examples R6a through R6d.

> **Example R5a:** Actions: Remove the relay from service. Replace capacitor in the relay. Test the relay. Return to service or replace by 07/01/2014.
>
> Applicability to other Protection Systems: This type of impedance relay has not been experiencing problems and is systematically being replaced with microprocessor relays as Protection Systems are modernized. Therefore, it was assessed that a program for wholesale preemptive replacement of capacitors in this type of impedance relay does not need to be established for the system.

The following is an example of a CAP for a relay Misoperation that was applying a standing trip due to a failed capacitor within the relay and the evaluation of the cause at similar locations which determined the capacitors need preemptive correction action.

> **Example R5b:** Actions: Remove the relay from service. Replace capacitor in the relay. Test the relay. Return to service or replace by 07/01/2014.
>
> Applicability to other Protection Systems: This type of impedance relay is suspected to have previously tripped at other locations because of the same type of capacitor issue. Based on the evaluation, a program should be established by 12/01/2014 for wholesale preemptive replacement of capacitors in this type of impedance relay.

The following is an example of a CAP for a relay Misoperation that was applying a standing trip due to a failed capacitor within the relay and the evaluation of the cause at similar locations which determined the capacitors need preemptive correction action.

> **Example R5c:** Actions: Remove the relay from service. Replace capacitor in the relay. Test the relay. Return to service or replace by 07/01/2014.
>
> Applicability to other Protection Systems: This type of impedance relay is suspected to have previously tripped at other locations because of the same type of capacitor issue. Based on the evaluation, the preemptive replacement of capacitors in this type of impedance relay should be pursued for the identified stations A through I by 04/30/2015.
>
> A plan is being developed to replace the impedance relay capacitors at stations A, B, and C by 09/01/2014. A second plan is being developed to replace the impedance relay capacitors at stations D, E, and F by 11/01/2014. The last plan will replace the impedance relay capacitors at stations G, H, and I by 02/01/2015.

The following is an example of a CAP for a relay Misoperation that was due to a version 2 firmware problem and the evaluation of the cause at similar locations which determined the firmware needs preemptive correction action.

> **Example R5d:** Actions: Provide the manufacturer fault records. Install new firmware pending manufacturer results by 10/01/2014.
>
> Applicability to other Protection Systems: Based on the evaluation of other locations and a risk assessment, the newer firmware version 3 should be installed at all installations that are identified to be version 2. Twelve relays were identified across the system. Proposed completion date is 12/31/2014.

The following are examples of a declaration made where corrective actions are beyond the entity's control or would not improve BES reliability and that no further corrective actions will be taken.

> **Example R5e:** The cause of the Misoperation was due to a non-registered entity communications provider problem.

> **Example R5f:** The cause of the Misoperation was due to a transmission transformer tapped industrial customer who initiated a direct transfer trip to a registered entity's transmission breaker.

In situations where a Misoperation cause emanates from a non-registered outside entity, there may be limited influence an entity can exert on an outside entity and is considered outside of an entity's control.

The following are examples of declarations made why corrective actions would not improve BES reliability.

> **Example R5g:** The investigation showed that the Misoperation occurred due to transients associated with energizing transformer ABC at Station Y. Studies show that de-sensitizing the relay to the recorded transients may cause the relay to fail to operate as intended during power system oscillations.
>
> **Example R5h:** As a result of an operation that left a portion of the power system in an electrical island condition, circuit XYZ within that island tripped, resulting in loss of load within the island. Subsequent investigation showed an overfrequency condition persisted after the formation of that island and the XYZ line protective relay operated. Since this relay was operating outside of its designed frequency range and would not be subject to this condition when line XYZ is operated normally connected to the BES, no corrective action will be taken because BES reliability would not be improved.
>
> **Example R5i:** During a major ice storm, four of six circuits were lost at Station A. Subsequent to the loss of these circuits, a skywire (i.e., shield wire) broke near station A on line AB (between Station A and B) resulting in a phase-phase Fault. The protection scheme utilized for both protection groups is a permissive overreaching transfer trip (POTT). The Line AB protection at Station B tripped timed for this event (i.e., Slow Trip – During Fault) even though this line had been identified as requiring high speed clearing. A weak infeed condition was created at Station A due to the loss of 4 transmission circuits resulting in the absence of a permissive signal on Line AB from Station A during this Fault. No corrective action will be taken for this Misoperation as even under N-1 conditions, there is normally enough infeed at Station A to send a proper permissive signal to station B. Any changes to the protection scheme to account for this would not improve BES reliability.

A declaration why corrective actions are beyond the entity's control or would not improve BES reliability should include the Misoperation cause and the justification for taking no corrective action. Furthermore, a declaration that no further corrective actions will be taken is expected to be used sparingly.

Requirement R6

To achieve the stated purpose of this standard, which is to identify and correct the causes of Misoperations of Protection Systems for BES Elements, the responsible entity is required to implement a CAP that addresses the specific problem (i.e., cause(s) of the Misoperation)

through completion. Protection System owners are required in the implementation of a CAP to update it when actions or timetable change, until completed. Accomplishing this objective is intended to reduce the occurrence of future Misoperations of a similar nature, thereby improving reliability and minimizing risk to the BES.

The following is an example of a completed CAP for a relay Misoperation that was applying a standing trip (See also, Example R5a).

> **Example R6a:** Actions: The impedance relay was removed from service on 06/02/2014 because it was applying a standing trip. A failed capacitor was found within the impedance relay and replaced. The impedance relay functioned properly during testing after the capacitor was replaced. The impedance relay was returned to service on 06/05/2014.
>
> CAP completed on 06/25/2014.

The following is an example of a completed CAP for a relay Misoperation that was applying a standing trip that resulted in the correction and the establishment of a program for further replacements (See also, Example R5b).

> **Example R6b:** Actions: The impedance relay was removed from service on 06/02/2014 because it was applying a standing trip. A failed capacitor was found within the impedance relay and replaced. The impedance relay functioned properly during testing after the capacitor was replaced. The impedance relay was returned to service on 06/05/2014.
>
> A program for wholesale preemptive replacement of capacitors in this type of impedance relay was established on 10/28/2014.
>
> CAP completed on 10/28/2014.

The following is an example of a completed CAP of corrective actions with a timetable that required updating for a failed relay and preemptive actions for similar installations (See also, Example R5c).

> **Example R6c:** Actions: The impedance relay was removed from service on 06/02/2014 because it was applying a standing trip. A failed capacitor was found within the impedance relay and replaced. The impedance relay functioned properly during testing after the capacitor was replaced. The impedance relay was returned to service on 06/05/2014.
>
> The impedance relay capacitor replacement was completed at stations A, B, and C on 08/16/2014. The impedance relay capacitor replacement was completed at stations D, E, and F on 10/24/2014. The impedance relay capacitor replacement for stations G, H, and I were postponed due to resource rescheduling from a scheduled 02/01/15 completion to 04/01/2015 completion. Capacitor replacement was completed on 03/09/2015 at stations G, H, and I. All stations identified in the evaluation have been completed.
>
> CAP completed on 03/09/2015.

The following is an example of a completed CAP for corrective actions with updated actions for a firmware problem and preemptive actions for similar installations. (See also, Example R5d).

> **Example R6d:** Actions: fault records were provided to the manufacturer on 06/04/2014. The manufacturer responded that the Misoperation was caused by a bug in version 2 firmware, and recommended installing version 3 firmware. Version 3 firmware was installed on 08/12/2014.
>
> Nine of the twelve relays were updated to version 3 firmware on 09/23/2014. The manufacturer provided a subsequent update which was determined to be beneficial for the remaining relays. The remaining three of twelve relays identified as having the version 2 firmware were updated to version 3.01 firmware on 11/10/2014.
>
> CAP completed on 11/10/2014.

The CAP is complete when all of the actions identified within the CAP have been completed.

Process Flow Chart: Below is a graphical representation demonstrating the relationships between Requirements:

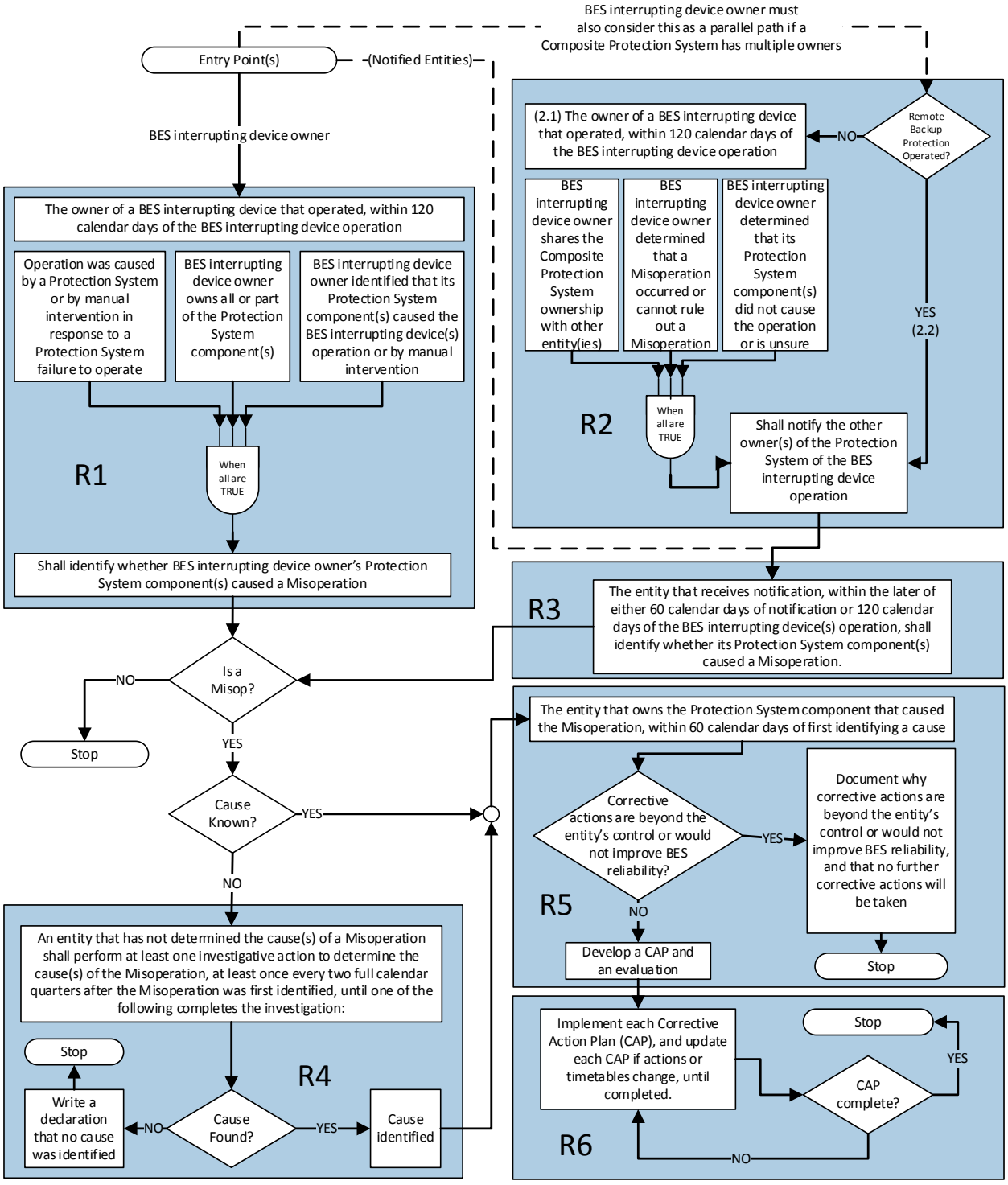
BES interrupting device owner must also consider this as a parallel path if a Composite Protection System has multiple owners
Entry Point(s)
(Notified Entities)
BES interrupting device owner
The owner of a BES interrupting device that operated, within 120 calendar days of the BES interrupting device operation
Operation was caused by a Protection System or by manual intervention in response to a Protection System failure to operate
BES interrupting device owner owns all or part of the Protection System component(s)
BES interrupting device owner identified that its Protection System component(s) caused the BES interrupting device(s) operation or by manual intervention
R1
When all are TRUE
Shall identify whether BES interrupting device owner's Protection System component(s) caused a Misoperation
Is a Misop?
NO
Stop
YES
Cause Known?
YES
NO
An entity that has not determined the cause(s) of a Misoperation shall perform at least one investigative action to determine the cause(s) of the Misoperation, at least once every two full calendar quarters after the Misoperation was first identified, until one of the following completes the investigation:
Stop
R4
Write a declaration that no cause was identified
NO
Cause Found?
YES
Cause identified
(2.1) The owner of a BES interrupting device that operated, within 120 calendar days of the BES interrupting device operation
NO
Remote Backup Protection Operated?
YES (2.2)
BES interrupting device owner shares the Composite Protection System ownership with other entity(ies)
BES interrupting device owner determined that a Misoperation occurred or cannot rule out a Misoperation
BES interrupting device owner determined that its Protection System component(s) did not cause the operation or is unsure
R2
When all are TRUE
Shall notify the other owner(s) of the Protection System of the BES interrupting device operation
R3
The entity that receives notification, within the later of either 60 calendar days of notification or 120 calendar days of the BES interrupting device(s) operation, shall identify whether its Protection System component(s) caused a Misoperation.
The entity that owns the Protection System component that caused the Misoperation, within 60 calendar days of first identifying a cause
Corrective actions are beyond the entity's control or would not improve BES reliability?
YES
Document why corrective actions are beyond the entity's control or would not improve BES reliability, and that no further corrective actions will be taken
Stop
R5
NO
Develop a CAP and an evaluation
Implement each Corrective Action Plan (CAP), and update each CAP if actions or timetables change, until completed.
Stop
YES
CAP complete?
R6
NO

Rationale

During development of this standard, text boxes were embedded within the standard to explain the rationale for various parts of the standard. Upon BOT approval, the text from the rationale text boxes was moved to this section.

Rationale for Introduction

The only revisions made to version of PRC-004-4 are revisions to section 4.2 Facilities to clarify applicability of the Requirements of the standard at generator Facilities. These applicability revisions are intended to clarify and provide for consistent application of the Requirements to BES generator Facilities included in the BES through Inclusion I4 – Dispersed Power Producing Resources.

Rationale for Applicability

Misoperations occurring on the Protection Systems of individual generation resources identified under Inclusion I4 of the BES definition do not have a material impact on BES reliability when considered individually; however, the aggregate capability of these resources may impact BES reliability if a number of Protection Systems on the individual power producing resources incorrectly operated or failed to operate as designed during a system event. To recognize the potential for the Protection Systems of individual power producing resources to affect the reliability of the BES, 4.2.1.5 of the Facilities section reflects the threshold consistent with the revised BES definition. See FERC Order Approving Revised Definition, P 20, Docket No. RD14-2-000. The intent of 4.2.1.5 of the Facilities section is to exclude from the standard requirements these Protection Systems for “common- mode failure” type scenarios affecting less than or equal to 75 MVA aggregated nameplate generating capability at these dispersed generating facilities.

PRC-004-5 Redline

A. Introduction

1. **Title: Protection System Misoperation Identification and Correction**

2. **Number:** PRC-004-54

3. **Purpose:** Identify and correct the causes of Misoperations of Protection Systems for Bulk Electric System (BES) Elements.

4. **Applicability:**

   4.1. Functional Entities:

   4.1.1 Transmission Owner

   4.1.2 Generator Owner

   4.1.3 Distribution Provider

   4.2. Facilities:

   4.2.1 Protection Systems for BES Elements, with the following exclusions:

   4.2.1.1 Non-protective functions that are embedded within a Protection System.

   4.2.1.2 Protective functions intended to operate as a control function during switching.[1]

   4.2.1.3 Special Protection Systems (SPS).

   4.2.1.4 Remedial Action Schemes (RAS).

   4.2.1.5 Protection Systems of individual dispersed power producing resources identified under Inclusion I4 of the BES definition where the Misoperations affected an aggregate nameplate rating of less than or equal to 75 MVA of BES Facilities.

   4.2.2 Underfrequency load shedding (UFLS) that is intended to trip one or more BES Elements.

~~**5. Background:**~~

~~A key factor for BES reliability is the correct performance of Protection Systems. The monitoring of Protection System events for BES Elements, as well as identifying and correcting the causes of Misoperations, will improve Protection System performance. This Reliability Standard PRC-004-3 – Protection System Misoperation Identification and Correction is a revision of PRC-004-2.1a – Analysis and Mitigation of Transmission and Generation Protection System Misoperations. The Reliability Standard PRC-003-1 – Regional Procedure for Analysis of Misoperations of Transmission and Generation Protection Systems requires Regional Entities to establish procedures for analysis of~~

[1] For additional information and examples, see the "Non-Protective Functions" and "Control Functions" sections in the Application Guidelines.

Misoperations. In the FERC Order No. 693, the Commission identified PRC-003-0 as a "fill-in-the-blank" standard. The Order stated that because the regional procedures had not been submitted, the Commission proposed not to approve or remand PRC-003-0. Because PRC-003-0 (now PRC-003-1) is not enforceable, there is not a mandatory requirement for Regional Entity procedures to support the Requirements of PRC-004-2.1a. This is a potential reliability gap; consequently, PRC-004-3 combines the reliability intent of the two legacy standards PRC-003-1 and PRC-004-2.1a.

This project includes revising the existing definition of Misoperation, which reads:

Misoperation

- Any failure of a Protection System element to operate within the specified time when a fault or abnormal condition occurs within a zone of protection.
- Any operation for a fault not within a zone of protection (other than operation as backup protection for a fault in an adjacent zone that is not cleared within a specified time for the protection for that zone).
- Any unintentional Protection System operation when no fault or other abnormal condition has occurred unrelated to on-site maintenance and testing activity.

In general, this definition needed more specificity and clarity. The terms "specified time" and "abnormal condition" are ambiguous. In the third bullet, more clarification is needed as to whether an unintentional Protection System operation for an atypical, yet explainable, condition is a Misoperation.

The SAR for this project also included clarifying reporting requirements. Misoperation data, as currently collected and reported, is not optimal to establish consistent metrics for measuring Protection System performance. As such, the data reporting obligation for this standard is being removed and is being developed under the NERC Rules of Procedure, Section 1600 – Request for Data or Information ("data request"). As a result of the data request, NERC will analyze the data to: develop meaningful metrics; identify trends in Protection System performance that negatively impact reliability; identify remediation techniques; and publicize lessons learned for the industry. The removal of the data collection obligation from the standard does not result in a reduction of reliability. The standard and data request have been developed in a manner such that evidence used for compliance with the standard and data request are intended to be independent of each other.

The proposed Requirements of the revised Reliability Standard PRC-004-3 meet the following objectives:

- Review all Protection System operations on the BES to identify those that are Misoperations of Protection Systems for Facilities that are part of the BES.
- Analyze Misoperations of Protection Systems for Facilities that are part of the BES to identify the cause(s).
- Develop and implement Corrective Action Plans to address the cause(s) of Misoperations of Protection Systems for Facilities that are part of the BES.

~~Misoperations associated with Special Protection Schemes (SPS) and Remedial Action Schemes (RAS) are not addressed in this standard due to their inherent complexities. NERC plans to handle SPS and RAS in the second phase of this project.~~

~~The Western Electric Coordinating Council (WECC) Regional Reliability Standard PRC-004-WECC-1 – Protection System and Remedial Action Scheme Misoperation relates to the reporting of Misoperations of Protection Systems and RAS for a limited set of WECC Paths. The WECC region plans to conduct work to harmonize the regional standard with this continent-wide proposed standard and the second phase of this project concerning SPS and RAS.~~

~~Undervoltage load shedding (UVLS) has not been included in this standard's applicability because Misoperations of UVLS relays are currently addressed by Reliability Standard PRC-022-1 – Under-Voltage Load Shedding Program Performance, Requirement R1.5. Underfrequency load shedding (UFLS) was added to PRC-004-3 to close a gap in reliability as Misoperations of UFLS relays are not covered by a Reliability Standard currently.~~

4.2.3 Undervoltage load shedding (UVLS) that is intended to trip one or more BES Elements.

~~6.~~5. Effective Date~~s~~: See Project 2008-02.2 Implementation Plan.

~~See the Implementation Plan for this Standard~~.

B. Requirements and Measures

R1. Each Transmission Owner, Generator Owner, and Distribution Provider that owns a BES interrupting device that operated under the circumstances in Parts 1.1 through 1.3 shall, within 120 calendar days of the BES interrupting device operation, identify whether its Protection System component(s) caused a Misoperation: *[Violation Risk Factor: Medium][Time Horizon: Operations Assessment, Operations Planning]*

1.1 The BES interrupting device operation was caused by a Protection System or by manual intervention in response to a Protection System failure to operate; and

1.2 The BES interrupting device owner owns all or part of the Composite Protection System; and

1.3 The BES interrupting device owner identified that its Protection System component(s) caused the BES interrupting device(s) operation or was caused by manual intervention in response to its Protection System failure to operate.

M1. Each Transmission Owner, Generator Owner, and Distribution Provider shall have dated evidence that demonstrates it identified the Misoperation of its Protection System component(s), if any, that meet the circumstances in Requirement R1, Parts 1.1, 1.2, and 1.3 within the allotted time period. Acceptable evidence for Requirement R1, including Parts 1.1, 1.2, and 1.3 may include, but is not limited to the following dated documentation (electronic or hardcopy format): reports, databases, spreadsheets, emails, facsimiles, lists, logs, records, declarations, analyses of sequence of events, relay targets, Disturbance Monitoring Equipment (DME) records, test results, or transmittals.

R2. Each Transmission Owner, Generator Owner, and Distribution Provider that owns a BES interrupting device that operated shall, within 120 calendar days of the BES interrupting device operation, provide notification as described in Parts 2.1 and 2.2. *[Violation Risk Factor: Medium][Time Horizon: Operations Assessment, Operations Planning]*

2.1 For a BES interrupting device operation by a Composite Protection System or by manual intervention in response to a Protection System failure to operate, notification of the operation shall be provided to the other owner(s) that share Misoperation identification responsibility for the Composite Protection System under the following circumstances:

2.1.1 The BES interrupting device owner shares the Composite Protection System ownership with any other owner; and

2.1.2 The BES interrupting device owner has determined that a Misoperation occurred or cannot rule out a Misoperation; and

2.1.3 The BES interrupting device owner has determined that its Protection System component(s) did not cause the BES interrupting device(s) operation or cannot determine whether its Protection System components caused the BES interrupting device(s) operation.

2.2 For a BES interrupting device operation by a Protection System component intended to operate as backup protection for a condition on another entity's BES Element, notification of the operation shall be provided to the other Protection System owner(s) for which that backup protection was provided.

M2. Each Transmission Owner, Generator Owner, and Distribution Provider shall have dated evidence that demonstrates notification to the other owner(s), within the allotted time period for either Requirement R2, Part 2.1, including subparts 2.1.1, 2.1.2, and 2.1.3 and Requirement R2, Part 2.2. Acceptable evidence for Requirement R2, including Parts 2.1 and 2.2 may include, but is not limited to the following dated documentation (electronic or hardcopy format): emails, facsimiles, or transmittals.

R3. Each Transmission Owner, Generator Owner, and Distribution Provider that receives notification, pursuant to Requirement R2 shall, within the later of 60 calendar days of notification or 120 calendar days of the BES interrupting device(s) operation, identify whether its Protection System component(s) caused a Misoperation. *[Violation Risk Factor: Medium][Time Horizon: Operations Assessment, Operations Planning]*

M3. Each Transmission Owner, Generator Owner, and Distribution Provider shall have dated evidence that demonstrates it identified whether its Protection System component(s) caused a Misoperation within the allotted time period. Acceptable evidence for Requirement R3 may include, but is not limited to the following dated documentation (electronic or hardcopy format): reports, databases, spreadsheets, emails, facsimiles, lists, logs, records, declarations, analyses of sequence of events, relay targets, DME records, test results, or transmittals.

R4. Each Transmission Owner, Generator Owner, and Distribution Provider that has not determined the cause(s) of a Misoperation, for a Misoperation identified in accordance with Requirement R1 or R3, shall perform investigative action(s) to determine the cause(s) of the Misoperation at least once every two full calendar quarters after the Misoperation was first identified, until one of the following completes the investigation: *[Violation Risk Factor: Medium] [Time Horizon: Operations Assessment, Operations Planning]*

- The identification of the cause(s) of the Misoperation; or
- A declaration that no cause was identified.

M4. Each Transmission Owner, Generator Owner, and Distribution Provider shall have dated evidence that demonstrates it performed at least one investigative action according to Requirement R4 every two full calendar quarters until a cause is identified or a declaration is made. Acceptable evidence for Requirement R4 may include, but is not limited to the following dated documentation (electronic or hardcopy format): reports, databases, spreadsheets, emails, facsimiles, lists, logs, records, declarations, analyses of sequence of events, relay targets, DME records, test results, or transmittals.

R5. Each Transmission Owner, Generator Owner, and Distribution Provider that owns the Protection System component(s) that caused the Misoperation shall, within 60 calendar days of first identifying a cause of the Misoperation: [*Violation Risk Factor: Medium*] [*Time Horizon: Operations Planning, Long-Term Planning*]

- Develop a Corrective Action Plan (CAP) for the identified Protection System component(s), and an evaluation of the CAP's applicability to the entity's other Protection Systems including other locations; or
- Explain in a declaration why corrective actions are beyond the entity's control or would not improve BES reliability, and that no further corrective actions will be taken.

M5. Each Transmission Owner, Generator Owner, and Distribution Provider shall have dated evidence that demonstrates it developed a CAP and an evaluation of the CAP's applicability to other Protection Systems and locations, or a declaration in accordance with Requirement R5. Acceptable evidence for Requirement R5 may include, but is not limited to the following dated documentation (electronic or hardcopy format): CAP and evaluation, or declaration.

R6. Each Transmission Owner, Generator Owner, and Distribution Provider shall implement each CAP developed in Requirement R5, and update each CAP if actions or timetables change, until completed. *[Violation Risk Factor: Medium][Time Horizon: Operations Planning, Long-Term Planning]*

M6. Each Transmission Owner, Generator Owner, and Distribution Provider shall have dated evidence that demonstrates it implemented each CAP, including updating actions or timetables. Acceptable evidence for Requirement R6 may include, but is not limited to the following dated documentation (electronic or hardcopy format): records that document the implementation of each CAP and the completion of actions for each CAP including revision history of each CAP. Evidence may also include work management program records, work orders, and maintenance records.

C. Compliance

1. Compliance Monitoring Process

1.1. Compliance Enforcement Authority

As defined in the NERC Rules of Procedure, "Compliance Enforcement Authority" (CEA) means NERC or the Regional Entity in their respective roles of monitoring and enforcing compliance with the NERC Reliability Standards.

1.2. Evidence Retention

The following evidence retention periods identify the period of time an entity is required to retain specific evidence to demonstrate compliance. For instances where the evidence retention period specified below is shorter than the time since the last audit, the CEA may ask an entity to provide other evidence to show that it was compliant for the full time period since the last audit.

The Transmission Owner, Generator Owner, and Distribution Provider shall keep data or evidence to show compliance as identified below unless directed by its CEA to retain specific evidence for a longer period of time as part of an investigation.

The Transmission Owner, Generator Owner, and Distribution Provider shall retain evidence of Requirements R1, R2, R3, and R4, Measures M1, M2, M3, and M4 for a minimum of 12 calendar months following the completion of each Requirement.

The Transmission Owner, Generator Owner, and Distribution Provider shall retain evidence of Requirement R5, Measure M5, including any supporting analysis per Requirements R1, R2, R3, and R4, for a minimum of 12 calendar months following completion of each CAP, completion of each evaluation, and completion of each declaration.

The Transmission Owner, Generator Owner, and Distribution Provider shall retain evidence of Requirement R6, Measure M6 for a minimum of 12 calendar months following completion of each CAP.

If a Transmission Owner, Generator Owner, or Distribution Provider is found non-compliant, it shall keep information related to the non-compliance until mitigation is complete and approved, or for the time specified above, whichever is longer.

The CEA shall keep the last audit records and all requested and submitted subsequent audit records.

1.3. Compliance Monitoring and Assessment Processes

Compliance Audit

Self-Certification

Spot Checking

Compliance Investigation

Self-Reporting

Complaint

1.4. Additional Compliance Information

None.

D. Table of Compliance Elements

R #	Time Horizon	VRF	Violation Severity Levels			
			Lower VSL	Moderate VSL	High VSL	Severe VSL
R1	Operations Assessment, Operations Planning	Medium	The responsible entity identified whether its Protection System component(s) caused a Misoperation in accordance with Requirement R1, but in more than 120 calendar days and less than or equal to 150 calendar days of the BES interrupting device operation.	The responsible entity identified whether its Protection System component(s) caused a Misoperation in accordance with Requirement R1, but in more than 150 calendar days and less than or equal to 165 calendar days of the BES interrupting device operation.	The responsible entity identified whether its Protection System component(s) caused a Misoperation in accordance with Requirement R1, but in more than 165 calendar days and less than or equal to 180 calendar days of the BES interrupting device operation.	The responsible entity identified whether its Protection System component(s) caused a Misoperation in accordance with Requirement R1, but in more than 180 calendar days of the BES interrupting device operation. OR The responsible entity failed to identify whether its Protection System component(s) caused a Misoperation in accordance with Requirement R1.

R #	Time Horizon	VRF	Violation Severity Levels			
			Lower VSL	Moderate VSL	High VSL	Severe VSL
R2	Operations Assessment, Operations Planning	Medium	The responsible entity notified the other owner(s) of the Protection System component(s) in accordance with Requirement R2, but in more than 120 calendar days and less than or equal to 150 calendar days of the BES interrupting device operation.	The responsible entity notified the other owner(s) of the Protection System component(s) in accordance with Requirement R2, but in more than 150 calendar days and less than or equal to 165 calendar days of the BES interrupting device operation.	The responsible entity notified the other owner(s) of the Protection System component(s) in accordance with Requirement R2, but in more than 165 calendar days and less than or equal to 180 calendar days of the BES interrupting device operation.	The responsible entity notified the other owner(s) of the Protection System component(s) in accordance with Requirement R2, but in more than 180 calendar days of the BES interrupting device operation. OR The responsible entity failed to notify one or more of the other owner(s) of the Protection System component(s) in accordance with Requirement R2.

R #	Time Horizon	VRF	Violation Severity Levels			
			Lower VSL	Moderate VSL	High VSL	Severe VSL
R3	Operations Assessment, Operations Planning	Medium	The responsible entity identified whether or not its Protection System component(s) caused a Misoperation in accordance with Requirement R3, but was less than or equal to 30 calendar days late.	The responsible entity identified whether or not its Protection System component(s) caused a Misoperation in accordance with Requirement R3, but was greater than 30 calendar days and less than or equal to 45 calendar days late.	The responsible entity identified whether or not its Protection System component(s) caused a Misoperation in accordance with Requirement R3, but was greater than 45 calendar days and less than or equal to 60 calendar days late.	The responsible entity identified whether or not its Protection System component(s) caused a Misoperation in accordance with Requirement R3, but was greater than 60 calendar days late. OR The responsible entity failed to identify whether or not a Misoperation of its Protection System component(s) occurred in accordance with Requirement R3.

R #	Time Horizon	VRF	Violation Severity Levels			
			Lower VSL	Moderate VSL	High VSL	Severe VSL
R4	Operations Assessment, Operations Planning	Medium	The responsible entity performed at least one investigative action in accordance with Requirement R4, but was less than or equal to one calendar quarter late.	The responsible entity performed at least one investigative action in accordance with Requirement R4, but was greater than one calendar quarter and less than or equal to two calendar quarters late.	The responsible entity performed at least one investigative action in accordance with Requirement R4, but was greater than two calendar quarters and less than or equal to three calendar quarters late.	The responsible entity performed at least one investigative action in accordance with Requirement R4, but was more than three calendar quarters late. OR The responsible entity failed to perform investigative action(s) in accordance with Requirement R4.

R #	Time Horizon	VRF	Violation Severity Levels			
			Lower VSL	Moderate VSL	High VSL	Severe VSL
R5	Operations Planning, Long-Term Planning	Medium	The responsible entity developed a CAP, or explained in a declaration in accordance with Requirement R5, but in more than 60 calendar days and less than or equal to 70 calendar days of first identifying a cause of the Misoperation. OR (See next page)	The responsible entity developed a CAP, or explained in a declaration in accordance with Requirement R5, but in more than 70 calendar days and less than or equal to 80 calendar days of first identifying a cause of the Misoperation. OR (See next page)	The responsible entity developed a CAP, or explained in a declaration in accordance with Requirement R5, but in more than 80 calendar days and less than or equal to 90 calendar days of first identifying a cause of the Misoperation. OR (See next page)	The responsible entity developed a CAP, or explained in a declaration in accordance with Requirement R5, but in more than 90 calendar days of first identifying a cause of the Misoperation. OR The responsible entity failed to develop a CAP or explain in a declaration in accordance with Requirement R5. OR (See next page)

R #	Time Horizon	VRF	Violation Severity Levels			
			Lower VSL	Moderate VSL	High VSL	Severe VSL
R5	(Continued)		The responsible entity developed an evaluation in accordance with Requirement R5, but in more than 60 calendar days and less than or equal to 70 calendar days of first identifying a cause of the Misoperation.	The responsible entity developed an evaluation in accordance with Requirement R5, but in more than 70 calendar days and less than or equal to 80 calendar days of first identifying a cause of the Misoperation.	The responsible entity developed an evaluation in accordance with Requirement R5, but in more than 80 calendar days and less than or equal to 90 calendar days of first identifying a cause of the Misoperation.	The responsible entity developed an evaluation in accordance with Requirement R5, but in more than 90 calendar days of first identifying a cause of the Misoperation. OR The responsible entity failed to develop an evaluation in accordance with Requirement R5.
R6	Operations Planning, Long-Term Planning	Medium	The responsible entity implemented, but failed to update a CAP, when actions or timetables changed, in accordance with Requirement R6.	N/A	N/A	The responsible entity failed to implement a CAP in accordance with Requirement R6.

E. Regional Variances

None.

F. Interpretations

None.

G. Associated Documents

NERC System Protection and Controls Subcommittee of the NERC Planning Committee, Assessment of Standards: PRC-003-1 – Regional Procedure for Analysis of Misoperations of Transmission and Generation Protection Systems, PRC-004-1 – Analysis and Mitigation of Transmission and Generation Protection Misoperations, PRC-016-1 – Special Protection System Misoperations, May 22, 2009.[2]

Version History

Version	Date	Action	Change Tracking
0	April 1, 2005	Effective Date	New
1	December 1, 2005	1. Changed incorrect use of certain hyphens (-) to "en dash" (–) and "em dash (—)." 2. Added "periods" to items where appropriate. 3. Changed "Timeframe" to "Time Frame" in item D, 1.2.	01/20/06
1a	February 17, 2011	Adopted by NERC Board of Trustees	Project 2009-17 interpretation adding Appendix 1- Interpretation regarding applicability of standard to protection of radially connected transformers
1a	September 26, 2011	Appended FERC- approved interpretation of R1 and R3 to version 1	FERC's Order approving the interpretation of R1 and R3 is effective as of September 26, 2011

[2] (http://www.nerc.com/comm/PC/System%20Protection%20and%20Control%20Subcommittee%20SPCS%20DL/PRC-003-004-016%20Report.pdf-).

Version	Date	Action	Change Tracking
~~2~~		~~Modified to address Order No. 693 Directives contained in paragraph 1469.~~	~~Revised~~
2	August 5, 2010	Adpoted by NERC Board of Trustees	Project 2010-12 modifications to address Order No. 693 Directives contained in paragraph 1469
~~1a~~	~~February 17, 2011~~	~~Added Appendix 1 – Interpretation regarding applicability of standard to protection of radially connected transformers~~	~~Project 2009-17 interpretation~~
~~1a~~	~~February 17, 2011~~	~~Adopted by NERC Board of Trustees~~	
~~1a~~	~~September 26, 2011~~	~~FERC Order issued approving the interpretation of R1 and R3 (FERC's Order is effective as of September 26, 2011)~~	
2a	September 26, 2011	Appended FERC-approved interpretation of R1 and R3 to version 2	FERC's Order approving the interpretation of R1 and R3 is effective as of September 26, 2011
2.1a	February 9, 2012	Adopted by NERC Board of Trustees ~~Errata change: Edited R2 to add "…and generator interconnection Facility…"~~	Errata change under Project 2010-07 to add "…and generator interconnection Facility…"~~Revision under Project 2010-07~~
~~2.1a~~	~~February 9, 2012~~	~~Errata change adopted by NERC Board of Trustees~~	
~~2.1a~~	~~September 19, 2013~~	~~FERC Order issued approving PRC-004-2.1a (approval becomes effective November 25, 2013).~~	

Version	Date	Action	Change Tracking
3	August 14, 2014	Adopted by NERC Board of Trustees	Revision under Project 2010-05.1
4	November 13, 2014	Adopted by NERC Board of Trustees	Applicability revised in Project 2014-01 to clarify application of Requirements to BES dispersed power producing resources
5	May 7, 2015	Adopted by NERC Board of Trustees	Revision under Project 2008-02.2

Guidelines and Technical Basis

Introduction

This standard addresses the reliability issues identified in the letter[3] from Gerry Cauley, NERC President and CEO, dated January 7, 2011.

> "Nearly all major system failures, excluding perhaps those caused by severe weather, have misoperations of relays or automatic controls as a factor contributing to the propagation of the failure. …Relays can misoperate, either operate when not needed or fail to operate when needed, for a number of reasons. First, the device could experience an internal failure – but this is rare. Most commonly, relays fail to operate correctly due to incorrect settings, improper coordination (of timing and set points) with other devices, ineffective maintenance and testing, or failure of communications channels or power supplies. Preventable errors can be introduced by field personnel and their supervisors or more programmatically by the organization."

The standard also addresses the findings in the *2011 Risk Assessment of Reliability Performance*[4]; July 2011.

> "…a number of multiple outage events were initiated by protection system Misoperations. These events, which go beyond their design expectations and operating procedures, represent a tangible threat to reliability. A deeper review of the root causes of dependent and common mode events, which include three or more automatic outages, is a high priority for NERC and the industry."

The *State of Reliability 2014*[5] report continued to identify Protection System Misoperations as a significant contributor to automatic transmission outage severity. The report recommended completion of the development of PRC-004-3 as part of the solution to address Protection System Misoperations.

Definitions

The Misoperation definition is based on the IEEE/PSRC Working Group I3 "Transmission Protective Relay System Performance Measuring Methodology[6]." Misoperations of a Protection System include failure to operate, slowness in operating, or operating when not required either during a Fault or non-Fault condition.

---

[3] (http://www.nerc.com/pa/Stand/Project%20201005%20Protection%20System%20Misoperations%20DL/20110209130708-Cauley%20letter.pdf).

[4] "2011 Risk Assessment of Reliability Performance." NERC. (http://www.nerc.com/files/2011_RARPR_FINAL .pdf. July 2011-). Pg. 3.

[5] "State of Reliability 2014." NERC. (http://www.nerc.com/pa/Stand/Pages/~~RelaibilityCoordinationProject 20066~~RelaibilityCoordinationProject20066.aspx-). May 2014. Pg. 18 of 106.

[6] "Transmission Protective Relay System Performance Measuring Methodology." Working Group I3 of Power System Relaying Committee of IEEE Power Engineering Society. 1999.

For reference, a "Protection System" is defined in the *Glossary of Terms Used in NERC Reliability Standards* ("NERC Glossary") as:

- Protective relays which respond to electrical quantities,
- Communications systems necessary for correct operation of protective functions,
- Voltage and current sensing devices providing inputs to protective relays,
- Station dc supply associated with protective functions (including station batteries, battery chargers, and non-battery-based dc supply), and
- Control circuitry associated with protective functions through the trip coil(s) of the circuit breakers or other interrupting devices.

A BES interrupting device is a BES Element, typically a circuit breaker or circuit switcher that has the capability to interrupt fault current. Although BES interrupting device mechanisms are not part of a Protection System, the standard uses the operation of a BES interrupting device by a Protection System to initiate the review for Misoperation.

The following two definitions are being proposed for inclusion in the NERC Glossary:

> **Composite Protection System –** *The total complement of Protection System(s) that function collectively to protect an Element. Backup protection provided by a different Element's Protection System(s) is excluded.*

The Composite Protection System definition is based on the principle that an Element's multiple layers of protection are intended to function collectively. This definition has been introduced in this standard and incorporated into the proposed definition of Misoperation to clarify that the overall performance of an Element's total complement of protection should be considered while evaluating an operation.

Composite Protection System – Line Example

The Composite Protection System of the Alpha-Beta line (Circuit #123) is comprised of current differential, permissive overreaching transfer trip (POTT), step distance (classic zone 1, zone 2, and zone 3), instantaneous-overcurrent, time-overcurrent, out-of-step, and overvoltage protection. The protection is housed at the Alpha and Beta substations, and includes the associated relays, communications systems, voltage and current sensing devices, DC supplies, and control circuitry.

Composite Protection System – Transformer Example

The Composite Protection System of the Alpha transformer (#2) is comprised of internal differential, overall differential, instantaneous-overcurrent, and time-overcurrent protection. The protection is housed at the Alpha substation, and includes the associated relays, voltage and current sensing devices, DC supplies, and control circuitry.

Composite Protection System – Generator Example

The Composite Protection System of the Beta generator (#3) is comprised of generator differential, overall differential, overcurrent, stator ground, reverse power, volts per hertz, loss-of-field, and undervoltage protection. The protection is housed at the Beta generating plant and at the Beta substation, and includes the associated relays, voltage and current sensing devices, DC supplies, and control circuitry.

Composite Protection System – Breaker Failure Example

Breaker failure protection provides backup protection for the breaker, and therefore is part of the breaker's Composite Protection System. Considering breaker failure protection to be part of another Element's Composite Protection System could lead to an incorrect conclusion that a breaker failure operation automatically satisfies the "Slow Trip" criteria of the Misoperation definition.

- An example of a correct operation of the breaker's Composite Protection System is when the breaker failure relaying tripped because the line relaying operated, but the breaker failed to clear the Fault. The breaker failure relaying operated because of a failed trip coil. The failed trip coil caused a Misoperation of the line's Composite Protection System.
- An example of a correct operation of the breaker's Composite Protection System is when the breaker failure relaying tripped because the line relaying operated, but the breaker failed to clear the Fault. Only the breaker failure relaying operated because of a failed breaker mechanism. This was not a Misoperation because the breaker mechanism is not part of the breaker's Composite Protection System.
- An example of an "Unnecessary Trip – During Fault" is when the breaker failure relaying tripped at the same time as the line relaying during a Fault. The Misoperation was due to the breaker failure timer being set to zero.

Misoperation – *The failure a Composite Protection System to operate as intended for protection purposes. Any of the following is a Misoperation:*

1. **Failure to Trip – During Fault** *– A failure of a Composite Protection System to operate for a Fault condition for which it is designed. The failure of a Protection System component is not a Misoperation as long as the performance of the Composite Protection System is correct.*
2. ***Failure to Trip – Other Than Fault*** *– A failure of a Composite Protection System to operate for a non-Fault condition for which it is designed, such as a power swing, undervoltage, overexcitation, or loss of excitation. The failure of a Protection System component is not a Misoperation as long as the performance of the Composite Protection System is correct.*
3. ***Slow Trip – During Fault*** *– A Composite Protection System operation that is slower than required for a Fault condition if the duration of its operating time resulted in the operation of at least one other Element's Composite Protection System.*

4. ***Slow Trip – Other Than Fault*** *– A Composite Protection System operation that is slower than required for a non-Fault condition, such as a power swing, undervoltage, overexcitation, or loss of excitation, if the duration of its operating time resulted in the operation of at least one other Element's Composite Protection System.*
5. ***Unnecessary Trip – During Fault*** *– An unnecessary Composite Protection System operation for a Fault condition on another Element.*
6. ***Unnecessary Trip – Other Than Fault*** *– An unnecessary Composite Protection System operation for a non-Fault condition. A Composite Protection System operation that is caused by personnel during on-site maintenance, testing, inspection, construction, or commissioning activities is not a Misoperation.*

The Misoperation definition is based on the principle that an Element's total complement of protection is intended to operate dependably and securely.

- Failure to automatically reclose after a Fault condition is not included as a Misoperation because reclosing equipment is not included within the definition of Protection System.
- A breaker failure operation does not, in itself, constitute a Misoperation.
- A remote backup operation resulting from a "Failure to Trip" or a "Slow Trip" does not, in itself, constitute a Misoperation.

This proposed definition of Misoperation provides additional clarity over the current version. A Misoperation is the failure of a Composite Protection System to operate as intended for protection purposes. The definition includes six categories which provide further differentiation of what constitutes a Misoperation. These categories are discussed in greater detail in the following sections.

Failure to Trip – During Fault

This category of Misoperation typically results in the Fault condition being cleared by remote backup Protection System operation.

> **Example 1a:** A failure of a transformer's Composite Protection System to operate for a transformer Fault is a Misoperation.
>
> **Example 1b:** A failure of a "primary" transformer relay (or any other component) to operate for a transformer Fault is not a "Failure to Trip – During Fault" Misoperation as long as another component of the transformer's Composite Protection System operated.
>
> **Example 1c:** A lack of target information does not by itself constitute a Misoperation. When a high-speed pilot system does not target because a high-speed zone element trips first, it would not in and of itself be a Misoperation.
>
> **Example 1d:** A failure of an overall differential relay to operate is not a "Failure to Trip – During Fault" Misoperation as long as another component such as a generator differential relay operated.

Example 1e: The Composite Protection System for a bus does not operate during a bus Fault which results in the operation of all local transformer Protection Systems connected to that bus and all remote line Protection Systems connected to that bus isolating the faulted bus from the grid. The operation of the local transformer Protection Systems and the operation of all remote line Protection Systems correctly provided backup protection. There is one "Failure to Trip – During Fault" Misoperation of the bus Composite Protection System.

In analyzing the Protection System for Misoperation, the entity must also consider whether the "Slow Trip – During Fault" category applies to the operation.

Failure to Trip – Other Than Fault

This category of Misoperation may have resulted in operator intervention. The "Failure to Trip – Other Than Fault" conditions cited in the definition are examples only, and do not constitute an all-inclusive list.

Example 2a: A failure of a generator's Composite Protection System to operate for an unintentional loss of field condition is a Misoperation.

Example 2b: A failure of an overexcitation relay (or any other component) is not a "Failure to Trip – Other Than Fault" Misoperation as long as the generator's Composite Protection System operated as intended isolating the generator from the BES.

In analyzing the Protection System for Misoperation, the entity must also consider whether the "Slow Trip – Other Than Fault" category applies to the operation.

Slow Trip – During Fault

This category of Misoperation typically results in remote backup Protection System operation before the Fault is cleared.

Example 3a: A Composite Protection System that is slower than required for a Fault condition is a Misoperation if the duration of its operating time resulted in the operation of at least one other Element's Composite Protection System. The current differential element of a multiple function relay failed to operate for a line Fault. The same relay's time-overcurrent element operated after a time delay. However, an adjacent line also operated from a time-overcurrent element. The faulted line's time-overcurrent element was found to be set to trip too slowly.

Example 3b: A failure of a breaker's Composite Protection System to operate as quickly as intended to meet the expected critical Fault clearing time for a line Fault in conjunction with a breaker failure (i.e., stuck breaker) is a Misoperation if it resulted in an unintended operation of at least one other Element's Composite Protection System. If a generating unit's Composite Protection System operates due to instability caused by the slow trip of the breaker's Composite Protection System, it is not an "Unnecessary Trip – During Fault" Misoperation of the generating unit's Composite Protection System. This event would be a "Slow Trip – During Fault" Misoperation of the breaker's Composite Protection System.

> **Example 3c:** A line connected to a generation interconnection station is protected with two independent high-speed pilot systems. The Composite Protection System for this line also includes step distance and time-overcurrent schemes in addition to the two pilot systems. During a Fault on this line, the two pilot systems fail to operate and the time-overcurrent scheme operates clearing the Fault with no generating units or other Elements tripping (i.e., no over-trips). This event is not a Misoperation.

The phrase “slower than required” means the duration of its operating time resulted in the operation of at least one other Element’s Composite Protection System. It would be impractical to provide a precise tolerance in the definition that would be applicable to every type of Protection System. Rather, the owner(s) reviewing each Protection System operation should understand whether the speed and outcome of its Protection System operation met their objective. The intent is not to require documentation of exact Protection System operation times, but to assure consideration of relay coordination and system stability by the owner(s) reviewing each Protection System operation.

The phrase “resulted in the operation of any other Composite Protection System” refers to the need to ensure that relaying operates in the proper or planned sequence (i.e., the primary relaying for a faulted Element operates before the remote backup relaying for the faulted Element).

In analyzing the Protection System for Misoperation, the entity must also consider the “Unnecessary Trip – During Fault” category to determine if an “unnecessary trip” applies to the Protection System operation of an Element other than the faulted Element.

If a coordination error was at the local terminal (i.e., set too slow), then it was a "Slow Trip," category of Misoperation at the local terminal.

Slow Trip – Other Than Fault

The phrase “slower than required” means the duration of its operating time resulted in the operation of at least one other Element’s Composite Protection System. It would be impractical to provide a precise tolerance in the definition that would be applicable to every type of Protection System. Rather, the owner(s) reviewing each Protection System operation should understand whether the speed and outcome of its Protection System operation met their objective. The intent is not to require documentation of exact Protection System operation times, but to assure consideration of relay coordination and system stability by the owner(s) reviewing each Protection System operation.

> **Example 4:** A phase to phase fault occurred on the terminals of a generator. The generator's Composite Protection System and a transmission line's Composite Protection System both operated in response to the fault. It was found during subsequent investigation that the generator protection contained an inappropriate time delay. This caused the transmission line's correctly set overreaching zone of protection to operate. This was a Misoperation of the generator’s Composite Protection System, but not of the transmission line’s Composite Protection System.

The “Slow Trip – Other Than Fault” conditions cited in the definition are examples only, and do not constitute an all-inclusive list.

Unnecessary Trip – During Fault

An operation of a properly coordinated remote Protection System is not in and of itself a Misoperation if the Fault has persisted for a sufficient time to allow the correct operation of the Composite Protection System of the faulted Element to clear the Fault. A BES interrupting device failure, a "failure to trip" Misoperation, or a "slow trip" Misoperation may result in a proper remote Protection System operation.

> **Example 5:** An operation of a transformer's Composite Protection System which trips (i.e., over-trips) for a properly cleared line Fault is a Misoperation. The Fault is cleared properly by the faulted equipment's Composite Protection System (i.e., line relaying) without the need for an external Protection System operation resulting in an unnecessary trip of the transformer protection; therefore, the transformer Protection System operation is a Misoperation.
>
> **Example 5b:** An operation of a line's Composite Protection System which trips (i.e., over-trips) for a properly cleared Fault on a different line is a Misoperation. The Fault is cleared properly by the faulted line's Composite Protection System (i.e., line relaying); however, elsewhere in the system, a carrier blocking signal is not transmitted (e.g., carrier ON/OFF switch found in OFF position) resulting in the operation of a remote Protection System, single-end trip of a non-faulted line. The operation of the Protection System for the non-faulted line is an unnecessary trip during a Fault. Therefore, the non-faulted line Protection System operation is an "Unnecessary Trip – During Fault" Misoperation.
>
> **Example 5c:** If a coordination error was at the remote terminal (i.e., set too fast), then it was an "Unnecessary Trip – During Fault" category of Misoperation at the remote terminal.

Unnecessary Trip – Other Than Fault

Unnecessary trips for non-Fault conditions include but are not limited to: power swings, overexcitation, loss of excitation, frequency excursions, and normal operations.

> **Example 6a:** An operation of a line's Composite Protection System due to a relay failure during normal operation is a Misoperation.
>
> **Example 6b:** Tripping a generator by the operation of the loss of field protection during an off-nominal frequency condition while the field is intact is a Misoperation assuming the Composite Protection System was not intended to operate under this condition.
>
> **Example 6c:** An impedance line relay trip for a power swing that entered the relay's characteristic is a Misoperation if the power swing was stable and the relay operated because power swing blocking was enabled and should have prevented the trip, but did not.
>
> **Example 6d:** Tripping a generator operating at normal load by the operation of a reverse power protection relay due to a relay failure is a Misoperation.

Additionally, an operation that occurs during a non-Fault condition but was initiated directly by on-site (i.e., real-time) maintenance, testing, inspection, construction, or commissioning is not a Misoperation.

> **Example 6e:** A BES interrupting device operation that occurs at the remote end of a line during a non-Fault condition because a direct transfer trip was initiated by system maintenance and testing activities at the local end of the line is not a Misoperation because of the maintenance exclusion in category 6 of the definition of "Misoperation."

The "on-site" activities at one location that initiates a trip to another location are included in this exemption. This includes operation of a Protection System when energizing equipment to facilitate measurements, such as verification of current circuits as a part of performing commissioning; however, once the maintenance, testing, inspection, construction, or commissioning activity associated with the Protection System is complete, the "on-site" Misoperation exclusion no longer applies, regardless of the presence of on-site personnel.

Special Cases

Protection System operations for these cases would not be a Misoperation.

> **Example 7a:** A generator Protection System operation prior to closing the unit breaker(s) is not a Misoperation provided no in-service Elements are tripped.

This type of operation is not a Misoperation because the generating unit is not synchronized and is isolated from the BES. Protection System operations that occur when the protected Element is out of service and that do not trip any in-service Elements are not Misoperations.

In some cases where zones of protection overlap, the owner(s) of Elements may decide to allow a Protection System to operate faster in order to gain better overall Protection System performance for an Element.

> **Example 7b:** The high-side of a transformer connected to a line may be within the zone of protection of the supplying line's relaying. In this case, the line relaying is planned to protect the area of the high-side of the transformer and into its primary winding. In order to provide faster protection for the line, the line relaying may be designed and set to operate without direct coordination (or coordination is waived) with local protection for Faults on the high-side of the connected transformer. Therefore, the operation of the line relaying for a high-side transformer Fault operated as intended and would not be a Misoperation.

Below are examples of conditions that would be a Misoperation.

> **Example7c:** A 230 kV shunt capacitor bank was released for operational service. The capacitor bank trips due to a settings error in the capacitor bank differential relay upon energization.
>
> **Example 7d:** A 230/115 kV BES transformer bank trips out when being re-energized due to an incorrect operation of the transformer differential relay for inrush after being released for operational service. Only the high-side breaker opens since the low-side breaker had not yet been closed.

Non-Protective Functions

BES interrupting device operations which are initiated by non-protective functions, such as those associated with generator controls, excitation controls, or turbine/boiler controls, static voltampere-reactive compensators (SVC), flexible ac transmission systems (FACTS), high-voltage dc (HVdc) transmission systems, circuit breaker mechanisms, or other facility control systems are not operations of a Protection System. The standard is not applicable to non-protective functions such as automation (e.g., data collection) or control functions that are embedded within a Protection System.

Control Functions

The entity must make a determination as to whether the standard is applicable to each operation of its Protection System in accordance with the provided exclusions in the standard's Applicability, see Section 4.2.1. The subject matter experts (SME) developing this standard recognize that entities use Protection Systems as part of a routine practice to control BES Elements. This standard is not applicable to operation of protective functions within a Protection System when intended for controlling a BES Element as a part of an entity's process or planned switching sequence. The following are examples of conditions to which this standard is not applicable:

> **Example 8a:** The reverse power protective function that operates to remove a generating unit from service using the entity's normal or routine process.
>
> **Example 8b:** The reverse power relay enables a permissive trip and the generator operator trips the unit.

The standard is not applicable to operation of the protective relay because its operation is intended as a control function as part of a controlled shutdown sequence for the generator. However, the standard remains applicable to operation of the reverse power relay when it operates for conditions not associated with the controlled shutdown sequence, such as a motoring condition caused by a trip of the prime mover.

The following is another example of a condition to which this standard is not applicable:

> **Example 8c:** Operation of a capacitor bank interrupting device for voltage control using functions embedded within a microprocessor based relay that is part of a Protection System.

The above are examples only, and do not constitute an all-inclusive list to which the standard is not applicable.

Extenuating Circumstances

In the event of a natural disaster or other extenuating circumstances, the December 20, 2012 Sanction Guidelines of the North American Electric Reliability Corporation, Section 2.8, Extenuating Circumstances, reads: "In unique extenuating circumstances causing or contributing to the violation, such as significant natural disasters, NERC or the Regional Entity may significantly reduce or eliminate Penalties." The Regional Entities to whom NERC has delegated

authority will consider extenuating circumstances when considering any sanctions in relation to the timelines outlined in this standard.

The volume of Protection System operations tend to be sporadic. If a high rate of Protection System operations is not sustained, utilities will have an opportunity to catch up within the 120 day period.

Requirement Time Periods

The time periods within all the Requirements are distinct and separate. The applicable entity in Requirement R1 has 120 calendar days to identify whether a BES interrupting device operation is a Misoperation. Once the applicable entity has identified a Misoperation, it has completed its performance under Requirement R1. Identified Misoperations without an identified cause become subject to Requirement R4 and any subsequent Requirements as necessary. Identified Misoperations with an identified cause become subject to Requirement R5 and any subsequent Requirements as necessary.

In Requirement R2, the applicable entity has 120 calendar days, based on the date of the BES interrupting device operation, to provide notification to the other Protection System owners that meet the circumstances in Parts 2.1 and 2.2. For the case of an applicable entity that was notified (R3), it has the later of 120 calendar days from the date of the BES interrupting device operation or 60 calendar days of notification to identify whether its Protection System components caused a Misoperation.

Once a Misoperation is identified in either Requirement R1 or R3, and the applicable entity did not identify the cause(s) of the Misoperation, the time period for performing at least one investigative action every two full calendar quarters begins. The time period(s) in Requirement R4 resets upon each period. When the applicable entity's investigative actions identify the cause of the identified Misoperation or the applicable entity declares that no cause was found, the applicable entity has completed its performance in Requirement R4.

The time period in Requirement R5 begins when the Misoperation cause is first identified. The applicable entity is allotted 60 calendar days to perform one of the two activities listed in Requirement R5 (e.g., CAP or declaration) to complete its performance under Requirement R5.

Requirement R6 time period is determined by the actions and the associated timetable to complete those actions identified in the CAP. The time periods contained in the CAP may change from time to time and the applicable entity is required to update the timetable when it changes.

Time periods provided in the Requirements are intended to provide a reasonable amount of time to perform each Requirement. Performing activities in the least amount of time facilitates prompt identification of Misoperations, notification to other Protection System owners, identification of the cause(s), correction of the cause(s), and that important information is retained that may be lost due to time.

Requirement R1

This Requirement initiates a review of each BES interrupting device operation to identify whether or not a Misoperation may have occurred. Since the BES interrupting device owner typically monitors and tracks device operations, the owner is the logical starting point for identifying Misoperations of Protection Systems for BES Elements. A review is required when (1) a BES interrupting device operates that is caused by a Protection System or by manual intervention in response to a Protection System failure to operate, (2) regardless of whether the owner owns all or part of the Protection System component(s), and (3) the owner identified its Protection System component(s) as causing the BES interrupting device operation or was caused by manual intervention in response to its Protection System failure to operate.

Since most Misoperations result in the operation of one or more BES interrupting devices, these operations initiate a review to identify any Misoperation. If an Element is manually isolated in response to a failure to operate, the manual isolation of the Element triggers a review for Misoperation.

> **Example R1a:** The failure of a loss of field relay on a generating unit where an operator takes action to isolate the unit.

Manual intervention may indicate a Misoperation has occurred, thus requiring the initiation of an investigation by the BES interrupting device owner.

For the case where a BES interrupting device did not operate and remote clearing occurs due to the failure of a Composite Protection System to operate, the BES interrupting device owner would still review the operation under Requirement R1. However, if the BES interrupting device owner determines that its Protection System component operated as backup protection for a condition on another entity's BES Element, the owner would provide notification of the operation to the other Protection System owner(s) under Requirement R2, Part 2.2.

Protection Systems are made of many components. These components may be owned by different entities. For example, a Generator Owner may own a current transformer that sends information to a Transmission Owner's differential relay. All of these components and many more are part of a Protection System. It is expected that all of the owners will communicate with each other, sharing information freely, so that Protection System operations can be analyzed, Misoperations identified, and corrective actions taken.

Each entity is expected to use judgment to identify those Protection System operations that meet the definition of Misoperation regardless of the level of ownership. A combination of available information from resources such as counters, relay targets, Supervisory Control and Data Acquisition (SCADA) systems, or DME would typically be used to determine whether or not a Misoperation occurred. The intent of the standard is to classify an operation as a Misoperation if the available information leads to that conclusion. In many cases, it will not be necessary to leverage all available data to determine whether or not a Misoperation occurred. The standard also allows an entity to classify an operation as a Misoperation if entity is not sure. The entity may decide to identify the operation as a Misoperation to satisfy Requirement R1 and continue its investigation for a cause of the Misoperation under Requirement R4. If the continued investigative actions are inconclusive, the entity may declare no cause found and end its investigation. The entity is allotted 120 calendar days from the date of its BES interrupting device operation to identify whether its Protection System component(s) caused a Misoperation.

The Protection System operation may be documented in a variety of ways such as in a report, database, spreadsheet, or list. The documentation may be organized in a variety of ways such as by BES interrupting device, protected Element, or Composite Protection System.

Repeated operations which occur during the same automatic reclosing sequence do not need a separate identification under Requirement R1. Repeated Misoperations which occur during the same 24-hour period do not need a separate identification under Requirement R1. This is consistent with the NERC *Misoperations Report*[7] which states:

> "In order to avoid skewing the data with these repeated events, the NERC SPCS should clarify, in the next annual update of the misoperation template, that all misoperations due to the same equipment and cause within a 24 hour period be recorded as one misoperation."

The following is an example of a condition that is not a Misoperation.

> **Example R1b:** A high impedance Fault occurs within a transformer. The sudden pressure relaying detects and operates for the Fault, but the differential relaying did not operate due to the low Fault current levels. This is not a Misoperation because the Composite Protection System was not required to operate because the Fault was cleared by the sudden pressure relay.

Requirement R2

Requirement R2 ensures notification of those who have a role in identifying Misoperations, but were not accounted for within Requirement R1. In the case of multi-entity ownership, the entity that owns the BES interrupting device that operated is expected to use judgment to identify those Protection System operations that meet the definition of Misoperation under Requirement R1; however, if the entity that owns a BES interrupting device determines that its Protection System component(s) did not cause the BES interrupting device(s) operation or cannot determine whether its Protection System components caused the BES interrupting device(s) operation, it must notify the other Protection System owner(s) that share Misoperation identification responsibility when the criteria in Requirement R2 is met.

This Requirement does not preclude the Protection System owners from initially communicating and working together to determine whether a Misoperation occurred and, if so, the cause. The BES interrupting device owner is only required to officially notify the other owners when it: (1) shares the Composite Protection System ownership with other entity(ies), (2) determines that a Misoperation occurred or cannot rule out a Misoperation, and (3) determines its Protection System component(s) did not cause a Misoperation or is unsure. Officially notifying the other owners without performing a preliminary review may unnecessarily burden the other owners with compliance obligations under Requirement R3, redirect valuable resources, and add little benefit to reliability. The BES interrupting device owner should officially notify other owners when appropriate within the established time period.

[7] "Misoperations Report." Reporting Multiple Occurrences. NERC Protection System Misoperations Task Force. (http://www.nerc.com/docs/pc/psmtf/PSMTF_Report.pdf.). April 1, 2013. pgPg. 37 of 40.

The following is an example of a notification to another Protection System owner:

> **Example R2a:** Circuit breakers A and B at the Charlie station tripped from directional comparison blocking (DCB) relaying on 03/03/2014 at 15:43 UTC during an external Fault. As discussed last week, the fault records indicate that a problem with your equipment (failure to transmit) caused the operation.
>
> **Example R2b:** A generator unit tripped out immediately upon synchronizing to the grid due to a Misoperation of its overcurrent protection. The Transmission Owner owns the 230 kV generator breaker that operated. The Transmission Owner, as the owner of the BES interrupting device after determining that its Protection System components did not cause the Misoperation, notified the Generator Owner of the operation. The Generator Owner investigated and determined that its Protection System components caused the Misoperation. In this example, the Generator Owner's Protection System components did cause the Misoperation. As the owner of the Protection System components that caused the Misoperation, the Generator Owner is responsible for creating and implementing the CAP.

A Composite Protection System owned by different functional entities within the same registered entity does not necessarily satisfy the notification criteria in Part 2.1.1 of Requirement R2. For example, if the same personnel within a registered entity perform the Misoperation identification for both the Generator Owner and Transmission Owner functions, then the Misoperation identification would be completely covered in Requirement R1, and therefore notification would not be required. However, if the Misoperation identification is handled by different groups, then notification would be required because the Misoperation identification would not necessarily be covered in Requirement R1.

> **Example R2c:** Line A Composite Protection System (owned by entity 1) failed to operate for an internal Fault. As a result, the zone 3 portion of Line B's Composite Protection System (owned by entity 2) and zone 3 portion of Line C's Composite Protection System (owned by entity 3) operated to clear the Fault. Entity 2 and 3 notified entity 1 of the remote zone 3 operation.

For the case where a BES interrupting device operates to provide backup protection for a non-BES Element, the entity reviewing the operation is not required to notify the other owners of Protection Systems for non-BES Elements. No notification is required because this Reliability Standard is not applicable to Protection Systems for non-BES Elements.

Requirement R3

For Requirement R3 (i.e., notification received), the entity that also owns a portion of the Composite Protection System is expected to use judgment to identify whether the Protection System operation is a Misoperation. A combination of available information from resources such as counters, relay targets, SCADA, DME, and information from the other owner(s) would typically be used to determine whether or not a Misoperation occurred. The intent of the standard is to classify an operation as a Misoperation if the available information leads to that conclusion. In many cases, it will not be necessary to leverage all available data to determine whether or not a Misoperation occurred. The standard also allows an entity to classify an operation as a Misoperation if an entity is not sure. The entity may decide to identify the operation as a

Misoperation to satisfy Requirement R1 and continue its investigation for a cause of the Misoperation under Requirement R4. If the continued investigative actions are inconclusive, the entity may declare no cause found and end its investigation.

The entity that is notified by the BES interrupting device owner is allotted the later of 60 calendar days from receipt of notification or 120 calendar days from the BES interrupting device operation date to determine if its portion of the Composite Protection System caused the Protection System operation. It is expected that in most cases of a jointly owned Protection System, the entity making notification would have been in communication with the other owner(s) early in the process. This means that the shorter 60 calendar days only comes into play if the notification occurs in the second half of the 120 calendar days allotted to the BES interrupting device owner in Requirement R1.

The Protection System review may be organized in a variety of ways such as in a report, database, spreadsheet, or list. The documentation may be organized in a variety of ways such as by BES interrupting device, protected Element, or Composite Protection System. The BES interrupting device owner's notification received may be documented in a variety of ways such as an email or a facsimile.

Requirement R4

The entity in Requirement R4 (i.e., cause identification), whether it is the entity that owns the BES interrupting device or an entity that was notified, is expected to use due diligence in taking investigative action(s) to determine the cause(s) of an identified Misoperation for its portion of the Composite Protection System. The SMEs developing this standard recognize there will be cases where the cause(s) of a Misoperation will not be revealed during the allotted time periods in Requirements R1 or R3; therefore, Requirement R4 provides the entity a mechanism to continue its investigative work to determine the cause(s) of the Misoperation when the cause is not known.

A combination of available information from resources such as counters, relay targets, SCADA, DME, test results, and studies would typically be used to determine the cause of the Misoperation. At least one investigative action must be performed every two full calendar quarters until the investigation is completed.

The following is an example of investigative actions taken to determine the cause of an identified Misoperation:

> **Example R4a**: A Misoperation was identified on 03/18/2014. A line outage to test the Protection System was scheduled on 03/24/2014 for 12/15/2014 as the first investigative action (i.e., beyond the next two full calendar quarters) due to summer peak conditions. The protection engineer contacted the manufacturer on 04/10/2014 (i.e., within two full calendar quarters) to obtain any known issues. The engineer reviewed manufacturer's documents on 05/27/2014. The outage schedule was confirmed on 08/29/2014 and was taken on 12/15/2014. Testing was completed on 12/16/2014 (i.e., in the second two full quarters) revealing the microprocessor relay as the cause of the Misoperation. A CAP is being developed to replace the relay.

Periodic action minimizes compliance burdens and focuses the entity's effort on determining the cause(s) of the Misoperation while providing measurable evidence. The SMEs recognize that

certain planned investigative actions may require months or years to schedule and complete; therefore, the entity is only required to perform at least one investigative action every two full calendar quarters. If an investigative action is performed in the first quarter of a calendar year, the next investigative action would need to be performed by the end of the third calendar quarter. If an investigative action is performed in the last quarter of a calendar year, the next investigative action would need to be performed by the end of the second calendar quarter of the following calendar year. Investigative actions may include a variety of actions, such as reviewing DME records, performing or reviewing studies, completing relay calibration or testing, requesting manufacturer review, requesting an outage, or confirming a schedule.

The entity's investigation is complete when it identifies the cause of the Misoperation or makes a declaration that no cause was determined. The declaration is intended to be used if the entity determines that investigative actions have been exhausted or have not provided direction for identifying the Misoperation cause. Historically, approximately 12% of Misoperations are unknown or unexplainable.[8]

Although the entity only has to document its specific investigative actions taken to determine the cause(s) of an identified Misoperation, the entity should consider the benefits of formally organizing (e.g., in a report or database) its actions and findings. Well documented investigative actions and findings may be helpful in future investigations of a similar event or circumstances. A thorough report or database may contain a detailed description of the event, information gathered, investigative actions, findings, possible causes, identified causes, and conclusions. Multiple owners of a Composite Protection System might consider working together to produce a common report for their mutual benefit.

The following are examples of a declaration where no cause was determined:

> **Example R4b**: A Misoperation was identified on 04/11/2014. All relays at station A and B functioned properly during testing on 08/26/2014 as the first investigative action. The carrier system functioned properly during testing on 08/27/2014. The carrier coupling equipment functioned properly during testing on 08/28/2014. A settings review completed on 09/03/2014 indicated the relay settings were proper. Since the equipment involved in the operation functioned properly during testing, the settings were reviewed and found to be correct, and the equipment at station A and station B is already monitored. The investigation is being closed because no cause was found.
>
> **Example R4c:** A Misoperation was identified on 03/22/2014. The protection scheme was replaced before the cause was identified. The power line carrier or PLC based protection was replaced with fiber-optic based protection with an in-service date of 04/16/2014. The new system will be monitored for recurrence of the Misoperation.

Requirement R5

Resolving the causes of Protection System Misoperations benefits BES reliability by preventing recurrence. The Corrective Action Plan (CAP) is an established tool for resolving operational

[8] NERC System Protection and Control Subcommittee. Misoperations Report. April 1, 2013~~:~~. (http://www.nerc.com/docs/pc/psmtf/PSMTF_Report.pdf~~-~~). Figure 15: NERC Wide Misoperations by Cause Code. ~~pg~~Pg. 22 of 40.

problems. The NERC Glossary defines a Corrective Action Plan as, *"A list of actions and an associated timetable for implementation to remedy a specific problem."* Since a CAP addresses specific problems, the determination of what went wrong needs to be completed before developing a CAP. When the Misoperation cause is identified in Requirement R1, R3 or R4, Requirement R5 requires Protection System owner(s) to develop a CAP, or explain why corrective actions are beyond the entity's control or would not improve BES reliability. The entity must develop the CAP or make a declaration why additional actions are beyond the entity's control or would not improve BES reliability and that no further corrective actions will be taken within 60 calendar days of first determining a cause.

The SMEs developing this standard recognize there may be multiple causes for a Misoperation. In these circumstances, the CAP would include a remedy for the identified causes. The CAP may be revised if additional causes are found; therefore, the entity has the option to create a single or multiple CAP(s) to correct multiple causes of a Misoperation. The 60 calendar day period for developing a CAP (or declaration) is established on the basis of industry experience which includes operational coordination timeframes, time to consider alternative solutions, coordination of resources, and development of a schedule.

The development of a CAP is intended to document the specific corrective actions needed to be taken to prevent Misoperation recurrence, the timetable for executing such actions, and an evaluation of the CAP's applicability to the entity's other Protection Systems including other locations. The evaluation of these other Protection Systems aims to reduce the risk and likelihood of similar Misoperations in other Protection Systems. The Protection System owner is responsible for determining the extent of its evaluation concerning other Protection Systems and locations. The evaluation may result in the owner including actions to address Protection Systems at other locations or the reasoning for not taking any action. The CAP and an evaluation of other Protection Systems including other locations must be developed to complete Requirement R5.

The following is an example of a CAP for a relay Misoperation that was applying a standing trip due to a failed capacitor within the relay and the evaluation of the cause at similar locations which determined capacitor replacement was not necessary.

For completion of each CAP in Examples R5a through R5d, please see Examples R6a through R6d.

> **Example R5a:** Actions: Remove the relay from service. Replace capacitor in the relay. Test the relay. Return to service or replace by 07/01/2014.
>
> Applicability to other Protection Systems: This type of impedance relay has not been experiencing problems and is systematically being replaced with microprocessor relays as Protection Systems are modernized. Therefore, it was assessed that a program for wholesale preemptive replacement of capacitors in this type of impedance relay does not need to be established for the system.

The following is an example of a CAP for a relay Misoperation that was applying a standing trip due to a failed capacitor within the relay and the evaluation of the cause at similar locations which determined the capacitors need preemptive correction action.

> **Example R5b:** Actions: Remove the relay from service. Replace capacitor in the relay. Test the relay. Return to service or replace by 07/01/2014.

Applicability to other Protection Systems: This type of impedance relay is suspected to have previously tripped at other locations because of the same type of capacitor issue. Based on the evaluation, a program should be established by 12/01/2014 for wholesale preemptive replacement of capacitors in this type of impedance relay.

The following is an example of a CAP for a relay Misoperation that was applying a standing trip due to a failed capacitor within the relay and the evaluation of the cause at similar locations which determined the capacitors need preemptive correction action.

Example R5c: Actions: Remove the relay from service. Replace capacitor in the relay. Test the relay. Return to service or replace by 07/01/2014.

Applicability to other Protection Systems: This type of impedance relay is suspected to have previously tripped at other locations because of the same type of capacitor issue. Based on the evaluation, the preemptive replacement of capacitors in this type of impedance relay should be pursued for the identified stations A through I by 04/30/2015.

A plan is being developed to replace the impedance relay capacitors at stations A, B, and C by 09/01/2014. A second plan is being developed to replace the impedance relay capacitors at stations D, E, and F by 11/01/2014. The last plan will replace the impedance relay capacitors at stations G, H, and I by 02/01/2015.

The following is an example of a CAP for a relay Misoperation that was due to a version 2 firmware problem and the evaluation of the cause at similar locations which determined the firmware needs preemptive correction action.

Example R5d: Actions: Provide the manufacturer fault records. Install new firmware pending manufacturer results by 10/01/2014.

Applicability to other Protection Systems: Based on the evaluation of other locations and a risk assessment, the newer firmware version 3 should be installed at all installations that are identified to be version 2. Twelve relays were identified across the system. Proposed completion date is 12/31/2014.

The following are examples of a declaration made where corrective actions are beyond the entity's control or would not improve BES reliability and that no further corrective actions will be taken.

Example R5e: The cause of the Misoperation was due to a non-registered entity communications provider problem.

Example R5f: The cause of the Misoperation was due to a transmission transformer tapped industrial customer who initiated a direct transfer trip to a registered entity's transmission breaker.

In situations where a Misoperation cause emanates from a non-registered outside entity, there may be limited influence an entity can exert on an outside entity and is considered outside of an entity's control.

The following are examples of declarations made why corrective actions would not improve BES reliability.

> **Example R5g:** The investigation showed that the Misoperation occurred due to transients associated with energizing transformer ABC at Station Y. Studies show that de-sensitizing the relay to the recorded transients may cause the relay to fail to operate as intended during power system oscillations.
>
> **Example R5h:** As a result of an operation that left a portion of the power system in an electrical island condition, circuit XYZ within that island tripped, resulting in loss of load within the island. Subsequent investigation showed an overfrequency condition persisted after the formation of that island and the XYZ line protective relay operated. Since this relay was operating outside of its designed frequency range and would not be subject to this condition when line XYZ is operated normally connected to the BES, no corrective action will be taken because BES reliability would not be improved.
>
> **Example R5i:** During a major ice storm, four of six circuits were lost at Station A. Subsequent to the loss of these circuits, a skywire (i.e., shield wire) broke near station A on line AB (between Station A and B) resulting in a phase-phase Fault. The protection scheme utilized for both protection groups is a permissive overreaching transfer trip (POTT). The Line AB protection at Station B tripped timed for this event (i.e., Slow Trip – During Fault) even though this line had been identified as requiring high speed clearing. A weak infeed condition was created at Station A due to the loss of 4 transmission circuits resulting in the absence of a permissive signal on Line AB from Station A during this Fault. No corrective action will be taken for this Misoperation as even under N-1 conditions, there is normally enough infeed at Station A to send a proper permissive signal to station B. Any changes to the protection scheme to account for this would not improve BES reliability.

A declaration why corrective actions are beyond the entity's control or would not improve BES reliability should include the Misoperation cause and the justification for taking no corrective action. Furthermore, a declaration that no further corrective actions will be taken is expected to be used sparingly.

Requirement R6

To achieve the stated purpose of this standard, which is to identify and correct the causes of Misoperations of Protection Systems for BES Elements, the responsible entity is required to implement a CAP that addresses the specific problem (i.e., cause(s) of the Misoperation) through completion. Protection System owners are required in the implementation of a CAP to update it when actions or timetable change, until completed. Accomplishing this objective is intended to reduce the occurrence of future Misoperations of a similar nature, thereby improving reliability and minimizing risk to the BES.

The following is an example of a completed CAP for a relay Misoperation that was applying a standing trip (See also, Example R5a).

> **Example R6a:** Actions: The impedance relay was removed from service on 06/02/2014 because it was applying a standing trip. A failed capacitor was found within the impedance relay and replaced. The impedance relay functioned properly during testing after the capacitor was replaced. The impedance relay was returned to service on 06/05/2014.
>
> CAP completed on 06/25/2014.

The following is an example of a completed CAP for a relay Misoperation that was applying a standing trip that resulted in the correction and the establishment of a program for further replacements (See also, Example R5b).

> **Example R6b:** Actions: The impedance relay was removed from service on 06/02/2014 because it was applying a standing trip. A failed capacitor was found within the impedance relay and replaced. The impedance relay functioned properly during testing after the capacitor was replaced. The impedance relay was returned to service on 06/05/2014.
>
> A program for wholesale preemptive replacement of capacitors in this type of impedance relay was established on 10/28/2014.
>
> CAP completed on 10/28/2014.

The following is an example of a completed CAP of corrective actions with a timetable that required updating for a failed relay and preemptive actions for similar installations (See also, Example R5c).

> **Example R6c:** Actions: The impedance relay was removed from service on 06/02/2014 because it was applying a standing trip. A failed capacitor was found within the impedance relay and replaced. The impedance relay functioned properly during testing after the capacitor was replaced. The impedance relay was returned to service on 06/05/2014.
>
> The impedance relay capacitor replacement was completed at stations A, B, and C on 08/16/2014. The impedance relay capacitor replacement was completed at stations D, E, and F on 10/24/2014. The impedance relay capacitor replacement for stations G, H, and I were postponed due to resource rescheduling from a scheduled 02/01/15 completion to 04/01/2015 completion. Capacitor replacement was completed on 03/09/2015 at stations G, H, and I. All stations identified in the evaluation have been completed.
>
> CAP completed on 03/09/2015.

The following is an example of a completed CAP for corrective actions with updated actions for a firmware problem and preemptive actions for similar installations. (See also, Example R5d).

> **Example R6d:** Actions: fault records were provided to the manufacturer on 06/04/2014. The manufacturer responded that the Misoperation was caused by a bug in version 2 firmware, and recommended installing version 3 firmware. Version 3 firmware was installed on 08/12/2014.

Nine of the twelve relays were updated to version 3 firmware on 09/23/2014. The manufacturer provided a subsequent update which was determined to be beneficial for the remaining relays. The remaining three of twelve relays identified as having the version 2 firmware were updated to version 3.01 firmware on 11/10/2014.

CAP completed on 11/10/2014.

The CAP is complete when all of the actions identified within the CAP have been completed.

Process Flow Chart: Below is a graphical representation demonstrating the relationships between Requirements:

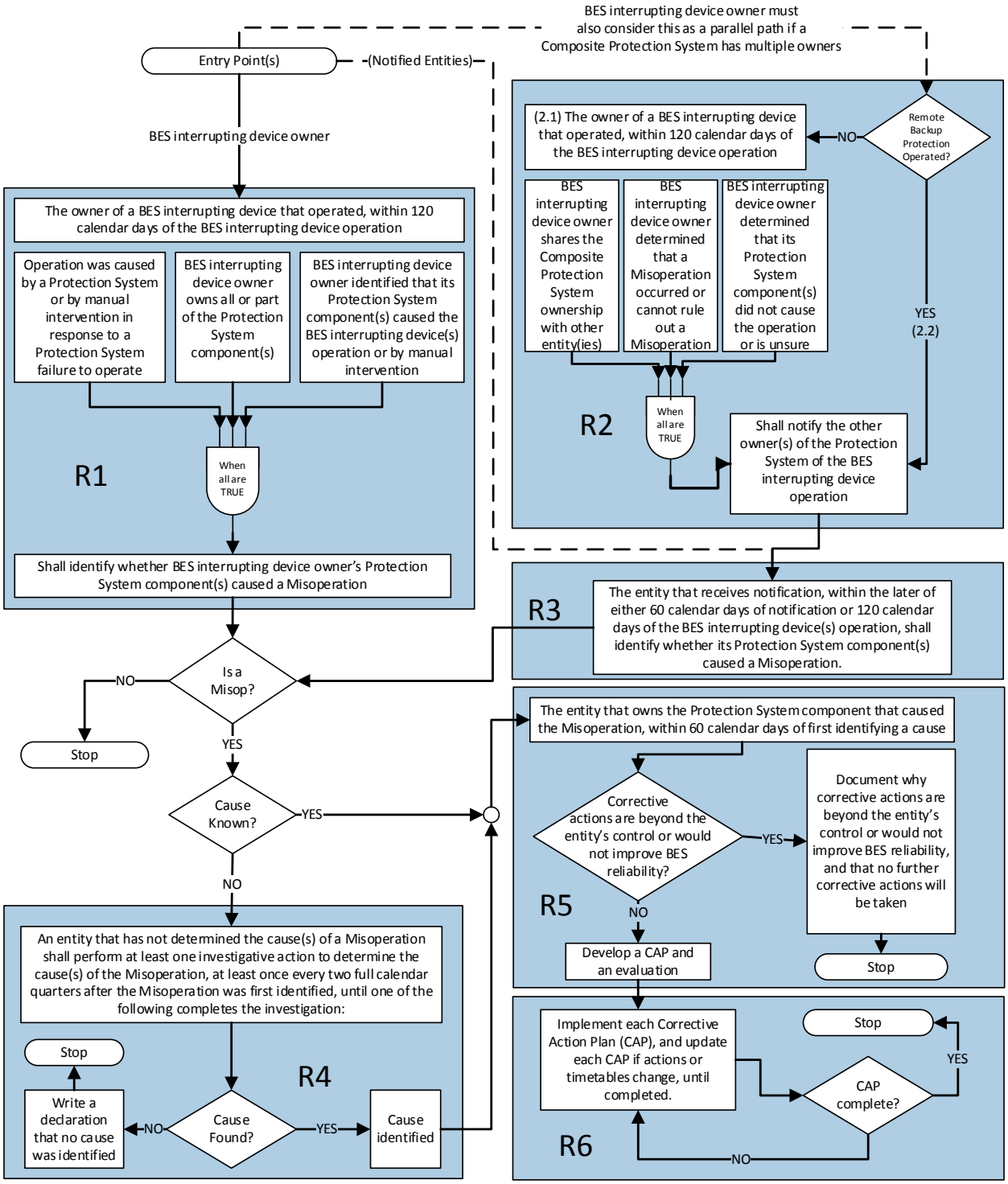

Rationale~~:~~

During development of this standard, text boxes were embedded within the standard to explain the rationale for various parts of the standard. ~~-~~Upon BOT approval, the text from the rationale text boxes was moved to this section.

Rationale for Introduction~~:~~

The only revisions made to ~~this~~ version of PRC-004-4 are revisions to section 4.2 Facilities to clarify applicability of the Requirements of the standard ~~to~~at generator Facilities.~~-~~ These applicability revisions are intended to clarify and provide for consistent application of the Requirements to BES generator Facilities included in the BES through Inclusion I4 – Dispersed Power Producing Resources.

Rationale for Applicability~~:~~

~~Protection Systems that protect BES Elements are integral to the operation and reliability of the BES. Some functions of relays are not used as protection but as control functions or for automation; therefore, any operation of the control function portion or the automation portion of relays is excluded from this standard. See the Application Guidelines for detailed examples of non-protective functions. Special Protection Systems (SPS) and Remedial Action Schemes (RAS) are excluded in this standard because they are planned to be handled in the second phase of Project 2010-05.1 .~~

Misoperations occurring on the Protection Systems of individual generation resources identified under Inclusion I4 of the BES definition do not have a material impact on BES reliability when considered individually; however, the aggregate capability of these resources may impact BES reliability if a number of Protection Systems on the individual power producing resources incorrectly operated or failed to operate as designed during a system event. To recognize the potential for the Protection Systems of individual power producing resources to affect the reliability of the BES, 4.2.1.5 of the Facilities section reflects the threshold consistent with the revised BES definition. ~~-~~See FERC Order Approving Revised Definition, P 20, Docket No. RD14-2-000.~~-~~ The intent of 4.2.1.5 of the Facilities section is to exclude from the standard requirements these Protection Systems for “common- mode failure” type scenarios affecting less than or equal to 75 MVA aggregated nameplate generating capability at these dispersed generating facilities.

~~**Rationale for R1:**~~

~~This Requirement ensures that entities review those Protection System operations meeting the circumstances in all three Parts (1.1, 1.2, and 1.3) and identify any that are Misoperations. The BES interrupting device owner is assigned the responsibility to initiate the review because the owner is in the best position to be aware of the operation. Manual intervention is included as a~~

~~condition that initiates a review. Occasionally, Protection System failures do not yield other Protection System operations and manual intervention is required to isolate the problematic equipment. The 120 calendar day period accounts for the sporadic volumes of Protection System operations, and provides the opportunity to identify any Misoperations which were initially missed.~~

~~Rationale for R2:~~

~~Part 2.1 ensures that the BES interrupting device owner notifies the other owners of the Composite Protection System. The phrase "owner(s) that share Misoperation identification responsibility" allows entities to notify the specific other owners that will actually review the operation to determine if a Misoperation occurred. Part 2.2 ensures that the Protection System owner(s) for which backup protection was provided receives notification, within the same 120 calendar day period as R1. This ensures other entities are notified to review their Protection System components. The expectation is that entities will communicate accordingly and when it is clear that Part 2.1, 2.2, or both are met, the entity would make the notification. It is not intended for entities to automatically and unnecessarily notify other entities before adequate detail is known.~~

~~Rationale for R3:~~

~~When an entity receives notification of a Protection System operation by the BES interrupting device owner, the other Protection System owner is allotted at least 60 calendar days to identify whether it was a Misoperation. A shorter time period is allotted on the basis that the BES interrupting device owner has already performed preliminary work, collaborated with the other owners, and that other owners generally have fewer associated Protection System components.~~

Exhibit A-2

Proposed Reliability Standard PRC-010-2

A. Introduction

1. **Title:** Undervoltage Load Shedding

2. **Number:** PRC-010-2

3. **Purpose:** To establish an integrated and coordinated approach to the design, evaluation, and reliable operation of Undervoltage Load Shedding Programs (UVLS Programs).

4. **Applicability:**

   4.1. Functional Entities:

   4.1.1 Planning Coordinator.

   4.1.2 Transmission Planner.

   4.1.3 Undervoltage load shedding (UVLS) entities – Distribution Providers and Transmission Owners responsible for the ownership, operation, or control of UVLS equipment as required by the UVLS Program established by the Transmission Planner or Planning Coordinator.

5. **Effective Date:** See Project 2008-02.2 Implementation Plan.

B. Requirements and Measures

R1. Each Planning Coordinator or Transmission Planner that is developing a UVLS Program shall evaluate its effectiveness and subsequently provide the UVLS Program's specifications and implementation schedule to the UVLS entities responsible for implementing the UVLS Program. The evaluation shall include, but is not limited to, studies and analyses that show: *[Violation Risk Factor: High] [Time Horizon: Long-term Planning]*

1.1. The implementation of the UVLS Program resolves the identified undervoltage issues that led to its development and design.

1.2. The UVLS Program is integrated through coordination with generator voltage ride-through capabilities and other protection and control systems, including, but not limited to, transmission line protection, autoreclosing, Remedial Action Schemes, and other undervoltage-based load shedding programs.

M1. Acceptable evidence may include, but is not limited to, date-stamped studies and analyses, reports, or other documentation detailing the effectiveness of the UVLS Program, and date-stamped communications showing that the UVLS Program specifications and implementation schedule were provided to UVLS entities.

R2. Each UVLS entity shall adhere to the UVLS Program specifications and implementation schedule determined by its Planning Coordinator or Transmission Planner associated with UVLS Program development per Requirement R1 or with any Corrective Action Plans per Requirement R5. *[Violation Risk Factor: High] [Time Horizon: Long-term Planning]*

M2. Acceptable evidence must include date-stamped documentation on the completion of actions and may include, but is not limited to, identifying the equipment armed with UVLS relays, the UVLS relay settings, associated Load summaries, work management program records, work orders, and maintenance records.

R3. Each Planning Coordinator or Transmission Planner shall perform a comprehensive assessment to evaluate the effectiveness of each of its UVLS Programs at least once every 60 calendar months. Each assessment shall include, but is not limited to, studies and analyses that evaluate whether: *[Violation Risk Factor: Medium] [Time Horizon: Long-term Planning]*

3.1. The UVLS Program resolves the identified undervoltage issues for which the UVLS Program is designed.

3.2. The UVLS Program is integrated through coordination with generator voltage ride-through capabilities and other protection and control systems, including, but not limited to, transmission line protection, autoreclosing, Remedial Action Schemes, and other undervoltage-based load shedding programs.

M3. Acceptable evidence may include, but is not limited to, date-stamped reports or other documentation detailing the assessment of the UVLS Program.

R4. Each Planning Coordinator or Transmission Planner shall, within 12 calendar months of an event that resulted in a voltage excursion for which its UVLS Program was designed to operate, perform an assessment to evaluate: *[Violation Risk Factor: Medium] [Time Horizon: Operations Planning]*

4.1. Whether its UVLS Program resolved the undervoltage issues associated with the event, and

4.2. The performance (i.e., operation and non-operation) of the UVLS Program equipment.

M4. Acceptable evidence may include, but is not limited to, date-stamped event data, event analysis reports, or other documentation detailing the assessment of the UVLS Program and associated equipment.

R5. Each Planning Coordinator or Transmission Planner that identifies deficiencies during an assessment performed in either Requirement R3 or R4 shall develop a Corrective Action Plan to address the deficiencies and subsequently provide the Corrective Action Plan, including an implementation schedule, to UVLS entities within three calendar months of completing the assessment. *[Violation Risk Factor: Medium] [Time Horizon: Operations Planning]*

M5. Acceptable evidence must include a date-stamped Corrective Action Plan that addresses identified deficiencies and may also include date-stamped reports or other documentation supporting the Corrective Action Plan. Evidence should also include date-stamped communications showing that the Corrective Action Plan and an associated implementation schedule were provided to UVLS entities.

R6. Each Planning Coordinator that has a UVLS Program in its area shall update a database containing data necessary to model the UVLS Program(s) in its area for use in event analyses and assessments of the UVLS Program at least once each calendar year. *[Violation Risk Factor: Lower] [Time Horizon: Operations Planning]*

M6. Acceptable evidence may include, but is not limited to, date-stamped spreadsheets, database reports, or other documentation demonstrating a UVLS Program database was updated.

R7. Each UVLS entity shall provide data to its Planning Coordinator according to the format and schedule specified by the Planning Coordinator to support maintenance of a UVLS Program database. *[Violation Risk Factor: Lower] [Time Horizon: Operations Planning]*

M7. Acceptable evidence may include, but is not limited to, date-stamped emails, letters, or other documentation demonstrating data was provided to the Planning Coordinator as specified.

R8. Each Planning Coordinator that has a UVLS Program in its area shall provide its UVLS Program database to other Planning Coordinators and Transmission Planners within its Interconnection, and other functional entities with a reliability need, within 30 calendar days of a written request. *[Violation Risk Factor: Lower] [Time Horizon: Operations Planning]*

M8. Acceptable evidence may include, but is not limited to, date-stamped emails, letters, or other documentation demonstrating that the UVLS Program database was provided within 30 calendar days of receipt of a written request.

C. Compliance

1. Compliance Monitoring Process

1.1. Compliance Enforcement Authority

As defined in the NERC Rules of Procedure, "Compliance Enforcement Authority" means NERC or the Regional Entity in their respective roles of monitoring and enforcing compliance with the NERC Reliability Standards.

1.2. Evidence Retention

The following evidence retention periods identify the period of time an entity is required to retain specific evidence to demonstrate compliance. For instances where the evidence retention period specified below is shorter than the time since the last audit, the Compliance Enforcement Authority may ask an entity to provide other evidence to show that it was compliant for the full-time period since the last audit.

The Planning Coordinator, Transmission Planner, Distribution Provider, and Transmission Owner shall keep data or evidence to show compliance as identified

below unless directed by its Compliance Enforcement Authority to retain specific evidence for a longer period of time as part of an investigation.

The applicable entity shall retain documentation as evidence for six calendar years.

If an applicable entity is found non-compliant, it shall keep information related to the non-compliance until mitigation is complete and approved, or for the time specified above, whichever is longer.

The Compliance Enforcement Authority shall keep the last audit records and all requested and submitted subsequent audit records.

1.3. Compliance Monitoring and Assessment Processes

"Compliance Monitoring and Assessment Processes" refers to the identification of the processes that will be used to evaluate data or information for the purpose of assessing performance or outcomes with the associated reliability standard.

1.4. Additional Compliance Information

None.

Table of Compliance Elements

R #	Time Horizon	VRF	Violation Severity Levels			
			Lower VSL	Moderate VSL	High VSL	Severe VSL
R1	Long-term Planning	High	N/A	N/A	N/A	The applicable entity that developed the UVLS Program failed to evaluate the program's effectiveness and subsequently provide the UVLS Program's specifications and implementation schedule to UVLS entities in accordance with Requirement R1, including the items specified in Parts 1.1 and 1.2.

R #	Time Horizon	VRF	Violation Severity Levels			
			Lower VSL	Moderate VSL	High VSL	Severe VSL
R2	Long-term Planning	High	N/A	N/A	The applicable entity failed to adhere to the UVLS Program specifications in accordance with Requirement R2. OR The applicable entity failed to adhere to the implementation schedule in accordance with Requirement R2.	The applicable entity failed to adhere to the UVLS Program specifications and implementation schedule in accordance with Requirement R2.
R3	Long-term Planning	Medium	N/A	N/A	N/A	The applicable entity failed to perform an assessment at least once during the 60 calendar months in accordance with Requirement R3, including the items specified in Parts 3.1 and 3.2.

R #	Time Horizon	VRF	Violation Severity Levels			
			Lower VSL	Moderate VSL	High VSL	Severe VSL
R4	Operations Planning	Medium	The applicable entity performed an assessment in accordance with Requirement R4 within a time period greater than 12 calendar months but less than or equal to 13 calendar months after an applicable event.	The applicable entity performed an assessment in accordance with Requirement R4 within a time period greater than 13 calendar months but less than or equal to 14 calendar months after an applicable event.	The applicable entity performed an assessment in accordance with Requirement R4 within a time period greater than 14 calendar months but less than or equal to 15 calendar months after an applicable event.	The applicable entity performed an assessment in accordance with Requirement R4 within a time period greater than 15 calendar months after an applicable event. OR The applicable entity failed to perform an assessment in accordance with Requirement R4.

R #	Time Horizon	VRF	Violation Severity Levels			
			Lower VSL	Moderate VSL	High VSL	Severe VSL
R5	Operations Planning	Medium	The applicable entity developed a Corrective Action Plan and provided it to UVLS entities in accordance with Requirement R5 but was late by less than or equal to 15 calendar days.	The applicable entity developed a Corrective Action Plan and provided it to UVLS entities in accordance with Requirement R5 but was late by more than 15 calendar days but less than or equal to 30 calendar days.	The applicable entity developed a Corrective Action Plan and provided it to UVLS entities in accordance with Requirement R5 but was late by more than 30 calendar days but less than or equal to 45 calendar days.	The applicable entity developed a Corrective Action Plan and provided it to UVLS entities in accordance with Requirement R5 but was late by more than 45 calendar days. OR The responsible entity failed to develop a Corrective Action Plan or provide it to UVLS entities in accordance with Requirement R5.

R #	Time Horizon	VRF	Violation Severity Levels			
			Lower VSL	Moderate VSL	High VSL	Severe VSL
R6	Operations Planning	Lower	The applicable entity updated the database in accordance with Requirement R6 but was late by less than or equal to 30 calendar days.	The applicable entity updated the database in accordance with Requirement R6 but was late by more than 30 calendar days but less than or equal to 60 calendar days.	The applicable entity updated the database in accordance with Requirement R6 but was late by more than 60 calendar days but less than or equal to 90 calendar days.	The applicable entity updated the database in accordance with Requirement R6 but was late by more than 90 calendar days. OR The applicable entity failed to update the database in accordance with Requirement R6.

R #	Time Horizon	VRF	Violation Severity Levels			
			Lower VSL	Moderate VSL	High VSL	Severe VSL
R7	Operations Planning	Lower	The applicable entity provided data in accordance with Requirement R7 but was late by less than or equal to 30 calendar days per the specified schedule. OR The applicable entity provided data in accordance with Requirement R7 but the data was not provided according to the specified format.	The applicable entity provided data in accordance with Requirement R7 but was late by more than 30 calendar days but less than or equal to 60 calendar days per the specified schedule.	The applicable entity provided data in accordance with Requirement R7 but was late by more than 60 calendar days but less than or equal to 90 calendar days per the specified schedule.	The applicable entity provided data in accordance with Requirement R7 but was late by more than 90 calendar days per the specified schedule. OR The applicable entity failed to provide data in accordance with Requirement R7.

R #	Time Horizon	VRF	Violation Severity Levels			
			Lower VSL	Moderate VSL	High VSL	Severe VSL
R8	Operations Planning	Lower	The applicable entity provided its UVLS Program database in accordance with Requirement R8 but was late by less than or equal to 15 calendar days.	The applicable entity provided its UVLS Program database in accordance with Requirement R8 but was late by more than 15 calendar days but less than or equal to 30 calendar days.	The applicable entity provided its UVLS Program database in accordance with Requirement R8 but was late by more than 30 calendar days but less than or equal to 45 calendar days.	The applicable entity provided its UVLS Program database in accordance with Requirement R8 but was late by more than 45 calendar days. OR The applicable entity failed to provide its UVLS Program database in accordance with Requirement R8.

D. Regional Variances

None.

E. Interpretations

None.

F. Associated Documents

None.

Version History

Version	Date	Action	Change Tracking
0	February 8, 2005	Adopted by NERC Board of Trustees	
0	April 1, 2005	Effective Date	
0	February 7, 2013	Adopted by NERC Board of Trustees	R2 and associated elements for retirement as part of the Paragraph 81 project (Project 2013-02) pending applicable regulatory approval.
1	November 13, 2014	Adopted by NERC Board of Trustees	Revisions made under Project 2008-02: Undervoltage Load Shedding (UVLS) & Underfrequency Load Shedding (UFLS) to address directive issued in FERC Order No. 763.
2	May 7, 2015	Adopted by NERC Board of Trustees	Revisions made under Project 2008-02.2: Undervoltage Load Shedding (UVLS): Misoperation to include UVLS equipment.

Guidelines and Technical Basis

Introduction

The standard drafting team provides the following discussion to support the approach to the standard. The information is meant to enhance the understanding of the reliability needs and deliverable expectations of each requirement, supported as necessary by technical principles and industry experience.

Guidelines for UVLS Program Definition

The definition for the term, “Undervoltage Load Shedding Program” or “UVLS Program” includes automatic load shedding programs that utilize only voltage inputs at locations where action is taken to shed load. As such, the failure of a single component is unlikely to affect the reliable operation of the program.

The UVLS Program definition excludes centrally controlled undervoltage-based load shedding, which utilizes inputs from multiple locations and may also utilize inputs other than voltages (such as generator reactive reserves, facility loadings, equipment statuses, etc.). The design and characteristics of a centrally controlled undervoltage-based load shedding system are the same as that of a Remedial Action Scheme (RAS), wherein load shedding is the remedial action. Therefore, just like for a RAS, the failure of a single component can compromise the reliable operation of centrally controlled undervoltage-based load shedding.

To ensure that the applicability of the standard includes only those undervoltage-based load shedding systems whose performance has an impact on system reliability, a UVLS Program must mitigate risk of one or more of the following: voltage instability, voltage collapse, or Cascading impacting the Bulk Electric System (BES). An example of a program that would not fall under this category is undervoltage-based load shedding installed to mitigate damage to equipment or local loads that are directly affected by the low voltage event.

Figure 1 below is an example of a BES subsystem for which a UVLS system could be used as a solution to mitigate various issues following the loss of the 345 kV double circuit line between buses A and B. If the consequence of this Contingency does not impact the BES by leading to voltage instability, voltage collapse, or Cascading, a UVLS system (installed at either, or both, bus B and D) used to mitigate this Contingency would not fall under the definition of a UVLS Program. However, if this same UVLS system is used to mitigate an Adverse Reliability Impact outside this contained area, it would be classified as a wide-area undervoltage problem and would fall under the definition of UVLS Program.

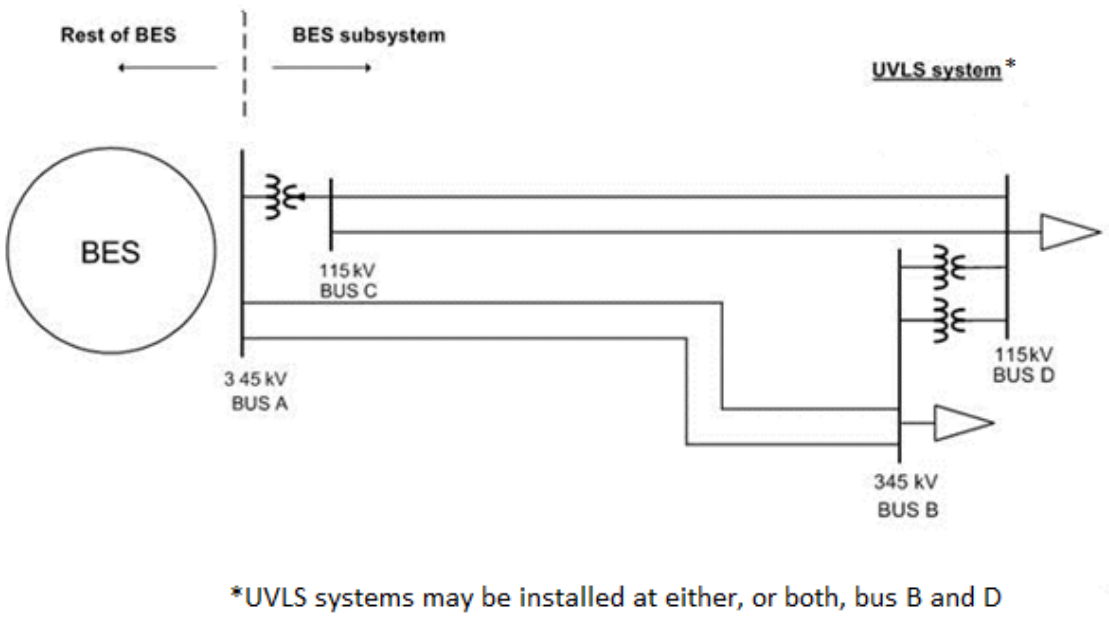

Figure 1: UVLS Subsystem

Guidelines for Requirements

Table 1 provides a high-level overview of the requirements contained in the standard.

Table 1: High-Level Requirement Overview

Requirement	Entity	Evaluate Program Effectiveness	Adhere to Program Specifications and Schedule	Perform Program Assessment (Periodic or Performance)	Develop a CAP to Address Program Deficiencies	Update and/or Share Program Data
R1	PC or TP	X				
R2	UVLS entity		X			
R3	PC or TP	X		X		
R4	PC or TP	X		X		
R5	PC or TP				X	
R6	PC					X
R7	UVLS entity					X
R8	PC					X

Guidelines for Requirement R1

A UVLS Program may be developed and implemented to either serve as a safety net system protection measure against unforeseen extreme Contingencies or to achieve specific system

performance for known transmission Contingencies for which dropping of load is allowed under Transmission Planning (TPL) Reliability Standards. Regardless of the purpose, it is important that the UVLS Program being implemented is effective in terms that it mitigates undervoltage conditions impacting the Bulk Electric System (BES), leading to voltage instability, voltage collapse, or Cascading. Consideration should be given to voltage set points and time delays, rate of voltage decay or recovery, power flow levels, etc. when designing a UVLS Program.

For the UVLS Program to be effective in achieving its goal, it is also necessary that the UVLS Program is coordinated with generator voltage ride-through capabilities and other protection and control systems that may have an impact on the performance of the UVLS Program. Some of these protection and control systems may include, but are not limited to, transmission line protection, RAS, other undervoltage-based load shedding programs, autoreclosing, and controls of shunt capacitors, reactors, and static voltampere-reactive systems (SVSs).

For example, if the purpose of a UVLS Program is to mitigate fault-induced delayed voltage recovery (FIDVR) events in a large load center that also includes local generation, it is important that such a UVLS Program is coordinated with local generators' voltage ride-through capabilities. Generators in the vicinity of a load center are critical to providing dynamic voltage support to the system during FIDVR events. To maximize the benefit of on-line generation, the best practice may be to shed load prior to generation trip. However, occasionally, it may be best to let generation trip prior to load shed. Therefore, the impact of generation tripping should be considered while designing a UVLS Program.

Another example that can be highlighted is the coordination of a UVLS Program with automatic shunt reactor tripping devices if there are any on the system. Most likely, any shunt reactors on the system will trip off automatically after some time delay during low voltage conditions. In such cases, shunt reactors should be tripped before the load is shed to preserve the system. This may require coordination of time delays associated with the UVLS Program with shunt reactor tripping devices.

The examples given above demonstrate that, for a UVLS Program to be effective, proper consideration should be given to coordination of a UVLS Program with generator ride-through capabilities and other protection and control systems.

Guidelines for Requirement R2

Once a Planning Coordinator (PC) or Transmission Planner (TP) has identified a need for a UVLS Program, the Planning Coordinator or Transmission Planner will develop a program that includes specifications and an implementation schedule, which are then provided to UVLS entities per Requirement R1. Specifications may include voltage set points, time delays, amount of load to be shed, and the location at which load needs to be shed. If UVLS entities do not implement the UVLS Program according to the specifications and schedule provided, the UVLS Program may not be effective and may not achieve its intended goal. The UVLS entity must document that all necessary actions were completed to implement the UVLS Program.

Similarly, when a Corrective Action Plan (CAP) to address UVLS Program deficiencies is developed by the Planning Coordinator or Transmission Planner and provided to UVLS entities per Requirement R5, UVLS entities must comply with the CAP and its associated implementation schedule to ensure that the UVLS Program is effective. The UVLS entity is required to complete the actions specified in the CAP, document the plan implementation, and retain the appropriate evidence to demonstrate implementation and completion.

Deferrals or other relevant changes to the UVLS Program specifications or CAP need to be documented so that the record includes not only what was planned, but what was implemented. Depending on the planning and documentation format used by the responsible entity, evidence of a successful execution could consist of signed-off work orders, printouts from work management systems, spreadsheets of planned versus completed work, timesheets, work inspection reports, paid invoices, photographs, walk-through reports, or other evidence.

For example, documentation of a CAP provides an auditable progress and completion confirmation for the identified UVLS Program deficiency:

CAP Example 1 - Corrective actions for a quick triggering problem; preemptive actions for similar installations:

The PC or TP obtains fault records from a UVLS entity that participates in its UVLS Program that indicate a group of UVLS relays triggered at the appropriate undervoltage level but with shorter delays than expected. The PC or TP directed the UVLS entity to schedule on-site inspections within three weeks. The results of the inspection confirmed that the delay-time programmed on the relays was 60 cycles instead of 90 cycles. The PC or TP then directed the UVLS entity to correct to a 90-cycle time delay setting of the UVLS relays identified to have shorter time delay settings within eight weeks.

Applicability to other UVLS relays: The PC or TP then developed a schedule with the UVLS entity to verify and adjust all remaining UVLS relays time delay settings within a one-year period.

The PC or TP verified completion of verification and adjustment of the time delay settings for all of the UVLS entity's equipment that participates in the PC or TP UVLS Program

CAP Example 2 - Corrective actions for a firmware problem; preemptive actions for similar installations:

The PC or TP obtains fault records on 6/4/2014 from a UVLS entity that participates in its UVLS Program. The UVLS entity also provided the fault records to the manufacturer, who responded on 6/11/2014 that the Misoperation[1] of the UVLS relay was caused by a bug in version 2 firmware, and recommended installing version 3 firmware. The PC or TP approved the UVLS entity's plan to schedule Version 3 firmware installation on 6/12/2014.

[1] Misoperation of Protection Systems reporting was initiated by the NERC Board of Trustees adopted NERC Rules of Procedure, Section 1600, Request for Data or Information. Refer to: *Request for Data of Information, Protection System Misoperation Data Collection*, August 14, 2014. http://www.nerc.com/pa/RAPA/ProctectionSystem Misoperations/PRC-004-3%20Section%201600%20Data%20Request_20140729.pdf.

Applicability to other UVLS relays: The PC or TP then developed a schedule with the UVLS entity to install firmware version 3 at all of the UVLS entity's UVLS relays that are determined to be programmed with version 2 firmware. The completion date was scheduled no-later-than 12/31/2014.

The firmware replacements were completed on 12/4/2014.

Guidelines for Requirement R3

In addition to the initial studies required to develop a UVLS Program, periodic comprehensive assessments (detailed analyses) are required to ensure its continued effectiveness. This assessment is required to be completed at least once every 60 calendar months to capture the accumulated effects of minor changes to the system that have occurred since the last assessment was completed. However, at any point in time, a Planning Coordinator or Transmission Planner may also determine that a material change[2] to system topology or operating conditions affects the performance of the UVLS Program and therefore necessitates the same comprehensive assessment. Regardless of the trigger, each assessment should include an evaluation of each UVLS Program to ensure the continued integration through coordination.

This comprehensive assessment complements the TPL-001-4 annual assessment requirement to evaluate the impact of protection systems. The 60-month period is the same time frame used in TPL-001-4 and in PRC-006-1.

As specified in Requirement R3, a comprehensive assessment must be performed at least once every 60 calendar months. If a Planning Coordinator or Transmission Planner conducts a comprehensive assessment sooner for the reasons discussed above, the 60-month time period would restart upon completion of this assessment.

Guidelines for Requirement R4

After a voltage excursion event, the goal of the assessment required in Requirement R4 is to evaluate: (1) whether the UVLS Program resolved the undervoltage issues, and (2) the performance of the UVLS Program equipment. The assessment should include event data analysis, such as the relevant sequence of events leading to the undervoltage conditions (e.g., Contingencies, operation of protection systems, and RAS) and field measurements useful to analyzing the behavior of the system. A comprehensive description of the UVLS Program operation should be presented, including conditions of the trigger (e.g., voltage levels, time delays) and amount of load shed for each affected substation. Assessment of the event is performed to evaluate the level of performance of the program for the event of interest and to identify deficiencies to be included in a CAP per Requirement R5. Misoperation of UVLS equipment is addressed as a deficiency. Reporting of UVLS equipment Misoperations are

[2] It is understood that the term material change is not transportable on a continent-wide basis. This determination must be made by the Planning Coordinator or Transmission Planner and should be accompanied by documentation to support the technical rationale for determining material changes.

addressed by the NERC *Request for Data and Information, Protection System Misoperation Data Collection*.[3]

The studies and analyses showing the effectiveness of the UVLS Program can be similar to what is required in Requirements R1 and R3, but should include a clear link between the evaluation of effectiveness (in studies using simulations) and the analysis of the event (with measurements and event data) that actually occurred. For example, differences between the expected and actual system behavior for the event of interest should be discussed and modeling assumptions should be evaluated. Important discrepancies between the simulations and the actual event should be investigated.

Considering the importance of an event that involves the operation of a UVLS Program, the 12-calendar-month period provides adequate time to analyze the event and perform an assessment while identifying deficiencies within a reasonable time. This time period is also required in PRC-006-1.

Guidelines for Requirement R5

Requirement R5 promotes the prudent correction of an identified problem during the assessment of a UVLS Program. Per Requirements R3 and R4, an assessment of an active UVLS Program is triggered:

- Within 12 calendar months of an event that resulted in a voltage excursion for which the program was designed to operate
- At least once every 60 calendar months. The default time frame of 60 calendar months or less between assessments has the intention to assure that the cumulative changes to the network and operating condition affecting the UVLS Program are evaluated

Since every UVLS is unique, if material changes are made to system topology or operating conditions, the Planning Coordinator or Transmission Planner will decide the degree to which the change in topology or operating condition becomes a material change sufficient to trigger an assessment of the existing UVLS Program.

A CAP is a list of actions and an associated timetable for implementation to remedy a specific problem. It is a proven tool for resolving operational problems. Per Requirement R5, the Planning Coordinator or Transmission Planner is required to develop a CAP and provide it to UVLS entities to accomplish the purpose of this requirement, which is to prevent future deficiencies in the UVLS Program, thereby minimizing risk to the system. Determining the cause of the deficiency is essential in developing an effective CAP to avoid future re-occurrence of the same problem. A CAP can be revised if additional causes are found.

Based on industry experience and operational coordination timeframes, three calendar months from the date an assessment is completed is a reasonable time frame for development of a CAP, including time to consider alternative solutions and coordination of resources. The “within three

[3] Id.

calendar months" time frame is solely to develop a CAP, including its implementation schedule, and provide it to UVLS entities. It does not include the time needed for its implementation by UVLS entities. This implementation time frame is dictated within the CAP's associated timetable for implementation, and the execution of the CAP according to its schedule is required in Requirement R2.

Guidelines for Requirements R6–R8

An accurate UVLS Program database is necessary for the Planning Coordinator or Transmission Planner to perform system reliability assessment studies and event analysis studies. Without accurate data, there is a possibility that annual reliability assessment studies that are performed by the Planning Coordinator or Transmission Planner can lead to erroneous results and therefore impact reliability. Also, without the accurate data, it is very difficult for the Planning Coordinator or Transmission Planner to duplicate a UVLS event and determine the root cause of the problem.

To support a UVLS Program database, it is necessary for each UVLS entity to provide accurate data to its Planning Coordinator. Each UVLS entity will provide the data according to the specified format and schedule provided by the Planning Coordinator. This is required in order for the Planning Coordinator to maintain and support a comprehensive UVLS Program database. By having a comprehensive database, the Planning Coordinator can embark on a reliability assessment or event analysis/benchmarking studies, identify the issues with the UVLS Program, and develop Corrective Action Plans.

The UVLS Program database may include, but is not limited to the following:

- Owner and operator of the UVLS Program
- Size and location of customer load, or percent of connected load, to be interrupted
- Corresponding voltage set points and clearing times
- Time delay from initiation to trip signal
- Breaker operating times
- Any other schemes that are part of or impact the UVLS Programs, such as related generation protection, islanding schemes, automatic load restoration schemes, underfrequency load shedding (UFLS), and RAS

Additionally, the UVLS Program database is required to be updated annually (once every calendar year) by the Planning Coordinator. The intent here is for UVLS entities to review the data annually and provide changes to the Planning Coordinators so that Planning Coordinators can keep the databases current and accurate for performing event analysis and other assessments.

Finally, a Planning Coordinator is required to provide information to other Planning Coordinators and Transmission Planners within its Interconnection, and other functional entities with a reliability need, within 30 calendar days of receipt of a written request. Thirty calendar days was selected as the time frame as it is considered to be reasonable and well- accepted by the industry. Also, this requirement of sharing the database with applicable functional entities supports the

directive provided by FERC that requires an integrated and coordinated approach to UVLS programs (Paragraph 1509 of FERC Order No. 693).

Frequently Asked Questions

To succinctly address common comment themes that require drafting team response on Project 2008-02 UVLS (proposed PRC-010-1), the drafting team provides the following discussion in the construct of an FAQ format.

Introduction

This Frequently Asked Questions (FAQ) document was created during the development of PRC-010-1 (*Undervoltage Load Shedding*)[4,5] to succinctly address common comment themes with respect to the approach and intent of the Project 2008-02 Undervoltage Load Shedding (UVLS)[6] standard drafting team ("drafting team"). This FAQ document is the outcome of comments received during comment periods and multiple outreach sessions with industry. All comments submitted by industry during comment periods may be reviewed on the project page.

Subsequent to the adoption of PRC-010-1, the UVLS drafting team made minor revisions to the standard address the UVLS Misoperation identification and correction.[7] This FAQ document was amended to reflect up the approach and intent of the drafting team during the development of PRC-010-2 concerning Misoperation of UVLS equipment.

Purpose of Standard Revision

1) What is the basis for a revision of the existing UVLS standards?

The initial input into a revision of the existing UVLS standards is FERC Order No. 693,[8] Paragraph 1509, which directed the ERO to develop a modification of PRC-010-0 that "requires that an integrated and coordinated approach be included in all protection systems on the Bulk-Power System, including generators and transmission lines, generators' low voltage ride through capabilities, and UFLS and UVLS programs." In addition, *The Final Report on the August 14, 2003 Blackout in the United States and Canada: Causes and Recommendations*[9] ("August 14 Blackout Report") showed that proper coordination would have mitigated effects if UVLS was used as a tool.

---

[4] (http://www.nerc.com/_layouts/PrintStandard.aspx?standardnumber=PRC-010-1&title=Undervoltage%20Load%20Shedding).
[5] Adopted by the NERC Board of Trustees on November 14, 2014.
[6] (http://www.nerc.com/pa/Stand/Pages/Project-2008-02-Undervoltage-Load-Shedding.aspx).
[7] Refer to Project 2010-05.1, which developed PRC-004-3 (Protection System Misoperation Identification and Correction) concurrently with the development of PRC-010-1. (http://www.nerc.com/pa/Stand/Pages/Project2010-05_Protection_System_Misoperations.aspx).
[8] (http://www.nerc.com/docs/docs/ferc/order_693.pdf).
[9] (http://energy.gov/sites/prod/files/oeprod/DocumentsandMedia/BlackoutFinal-Web.pdf).

Additional inputs included 1) recommendations from the NERC System Protection and Control Subcommittee (SPCS) in its December 2010 *Technical Review of UVLS-Related Standards*[10] to combine the four existing UVLS standards, revise the applicability to entities responsible for UVLS program design, implementation, and coordination, specifically include a requirement for assessment of coordination between UVLS programs and all other protection systems, and differentiate post-event validation of UVLS program design from verifying correct operation of UVLS equipment; 2) the existing UVLS standards were not in the current results-based format; 3) the preceding revision of the underfrequency load shedding (UFLS) standards had similar types of requirements and had been completed under the construct of a consolidation; and 4) the Independent Expert Review Panel recommendations, which included an evaluation of the existing standards' applicability and level of specificity.

The drafting team agrees that a lack of coordination among protection systems is a key risk to reliability. As part of the revision to address this, the drafting team also agreed that an evaluation and consolidation of the existing UVLS standards was necessary to meet current Reliability Standard development initiatives and to provide clear, comprehensive requirements to address the application and coordination of UVLS.

2) UVLS programs are not mandatory—is compliance for an optional tool necessary?

The drafting team asserts that a key takeaway from the August 14 Blackout Report is that coordination of UVLS with other protection systems could have mitigated the effects if UVLS was used as a tool. Although the use of UVLS is not mandatory, if it is determined that this system preservation measure is necessary to support reliability and a UVLS program is installed, the program needs to be properly coordinated, implemented, and assessed due to the inherent associated reliability risks. As such, there needs to be a level of performance required to properly protect system reliability. Of note, PRC-010-1 and PRC-010-2 apply to the defined term "UVLS Program," which limits the standard's applicability to only those undervoltage-based load shedding programs whose performance has an impact on system reliability.[11]

Coordination with Project 2009-03 Emergency Operations

3) EOP-003-2 has potential redundant requirements with proposed PRC-010-1—how is this being addressed?

As part of its five-year review, Project 2009-03 – Emergency Operations (EOP) identified EOP-003-2 (*Load Shedding Plans*),[12] Requirements R2, R4, and R7 as being more properly covered by Project 2008-02 – UVLS. Both projects were strategically coordinated to move in lockstep from a timing perspective to address these requirements. Project 2009-03 – EOP proposed to revise and

[10] (http://www.nerc.com/docs/pc/spctf/PRC-010_022%20Report_Approved_20101208.pdf).
[11] The term "UVLS Program" used herein was adopted by the NERC Board of Trustees on November 14, 2014.
[12] (http://www.nerc.com/_layouts/PrintStandard.aspx?standardnumber=EOP-003-2&title=Load%20Shedding%20Plans).

consolidate EOP-001-2.1b (*Emergency Operations Planning*),[13] EOP-002-3 (Capacity and Energy Emergencies),[14] and EOP-003-2 to create EOP-011-1, will retire the noted EOP-003-2 requirements (among other revisions), and the Project 2008-02 – UVLS *Mapping Document* will show how PRC-010-1 encompasses the retired content accordingly. Slated to have aligning effective dates, both EOP-011-1 (*Emergency Operations*)[15] and PRC-010-1 will be posted and balloted separately but concurrently, so that industry stakeholders will be able to clearly evaluate the transition. Please see the posted Project 2008-02 UVLS Project Coordination Plan for more information.

"UVLS Program" Definition

4) Why is the introduction of the new defined term "UVLS Program" necessary?

The drafting team found it necessary to introduce the term "UVLS Program" for inclusion in the *Glossary of Terms Used in NERC Reliability Standards*[16] ("NERC Glossary") because different types of UVLS systems need to be treated appropriately with respect to reliability requirements. Therefore, the term establishes which UVLS systems PRC-010-1 will apply to an: "automatic load shedding program consisting of distributed relays and controls used to mitigate undervoltage conditions impacting the Bulk Electric System (BES), leading to voltage instability, voltage collapse, or Cascading. Centrally controlled undervoltage-based load shedding is not included."

The definition excludes locally-applied relays that are designed to protect a contained area or, in other words, are not designed to mitigate wide-area voltage collapse. This exclusion is not explicit in these terms in the enforceable language of the definition since the meaning and measurement of "local" or "wide-area" varies greatly on a continent-wide basis and could potentially be interpreted differently by auditors and the applicable functional entities. Therefore, the definition as written is meant to provide flexibility for the Planning Coordinator or Transmission Planner to determine if a UVLS system falls under the defined term with respect to its impact on the reliability of the BES (voltage instability, voltage collapse, or Cascading). To further support the intended exclusion, further discussion and an example are provided on in the PRC-010-1 and PRC-010-2 Guidelines and Technical Basis section under the heading "Guidelines for UVLS Program Definition."

The definition does explicitly note that the term excludes centrally controlled undervoltage-based load shedding. This type of load shedding is excluded because the drafting team asserts that the design and characteristics of centrally controlled undervoltage-based load shedding are commensurate with those of a Special Protection System (SPS) or Remedial Action Scheme (RAS) and should therefore be subject to SPS or RAS-related Reliability Standards. See PRC-010-1 and

[13] (http://www.nerc.com/_layouts/PrintStandard.aspx?standardnumber=EOP-001-2.1b&title=Emergency%20Operations%20Planning).
[14] (http://www.nerc.com/_layouts/PrintStandard.aspx?standardnumber=EOP-002-3&title=Capacity%20and%20Energy%20Emergencies).
[15] (http://www.nerc.com/_layouts/PrintStandard.aspx?standardnumber=EOP-011-1&title=Emergency%20Operations).
[16] (http://www.nerc.com/pa/Stand/Glossary%20of%20Terms/Glossary_of_Terms.pdf).

PRC-010-2 Guidelines and Technical Basis section under the heading "Guidelines for UVLS Program Definition" for further discussion.

5) If the definition excludes certain types of UVLS, does this preclude an "integrated" approach (FERC Order No. 693, Paragraph 1509)?

The defined term "UVLS Program" clarifies which UVLS systems are subject to the requirements in PRC-010-1 and PRC-010-2. The resulting exclusions from these versions of the standard do not preclude an "integrated" approach because the standard requires that an entity coordinate with all other protection and control systems as necessary, which may include other types of UVLS (i.e., locally-applied UVLS relays and centrally controlled undervoltage-based load shedding).

6) Where will centrally controlled undervoltage-based load shedding be covered?

As explained immediately above, the Requirements of PRC-010-1 and PRC-010-2 are applicable to the proposed NERC Glossary term "UVLS Program," which excludes centrally controlled undervoltage-based load shedding because its design and characteristics are commensurate with those of an SPS or RAS. However, the NERC Glossary during the development of PRC-010-1 definition of "Special Protection System" excluded UVLS. Therefore, the work under Project 2010-05.2 – Special Protection Systems (Phase 2 of Protection Systems) combined the NERC Glossary definition of "Special Protection System" into the single term "Remedial Action Scheme."[17] The definition revisions specifically excluded UVLS Programs, therefore including centrally controlled undervoltage-based shedding.

Consequently, the introduction of the term "UVLS Program" and the conforming revision to the term "Remedial Action Scheme" explicitly clarifies that RAS-related standards are applicable to centrally controlled undervoltage-based load shedding. The implementation plan for the revised definition of "Remedial Action Scheme" will address entities that will have newly identified RAS resulting from the application of the defined term.

Similar to the coordination effort with Project 2009-03 – EOP explained above, Project 2008-02 – UVLS and Project 2010-05.2 – SPS were coordinated to ensure that the effective dates of the adopted definitions of "Remedial Action Scheme" and "UVLS Program," the PRC-010-1 and PRC-010-1 Reliability Standards, and all associated retirements align.

7) Is the term "UVLS Program" inclusive of a collection of independent UVLS relays?

No; multiple independent relays do not constitute a program. While the definition stipulates that a UVLS Program consists of distributed relays and controls, the definition specifies that it must be "[a]n automatic load shedding program, consisting of distributed relays and controls, used to mitigate undervoltage conditions impacting the Bulk Electric System(BES), leading to voltage

[17] Adopted by the NERC Board of Trustees on November 14, 2014.

instability, voltage collapse, or Cascading. Centrally controlled undervoltage-based load shedding is not included."

Applicability

8) What is meant by the phrase "Planning Coordinator or Transmission Planner"?

The PRC-010-1 and PRC-010-2 Reliability Standards are applicable to both the Planning Coordinator and Transmission Planner because either may be responsible for designing and coordinating the program based on agreements, memorandums of understanding, or tariffs. The phrase "Planning Coordinator or Transmission Planner" provides the flexibility for applicability to the entity that will perform the action. The expectation is not that both parties will perform the action, but rather that the Planning Coordinator and Transmission Planner will engage in discussion to determine the appropriate responsible entity. In addition, the requirements containing this phrase have specific language to qualify the responsible entity. For example, Requirement R1 states: "Each Planning Coordinator or Transmission Planner *that is developing* a UVLS Program shall . . ." This language provides clarity that the applicable entity would be the one that is developing the program.

9) Why is the Transmission Operator not included?

While the Transmission Operator may be involved with UVLS Program activities, the drafting team did not identify any required performance for the Transmission Operator that was necessary to capture within PRC-010-1 and PRC-010-2, since the Transmission Operator does not have the resources necessary to implement program specifications. If responsibilities are delegated to the Transmission Operator by the Transmission Owner, the Transmission Owner is still the accountable party.

To the extent that the Transmission Operator is required to have knowledge of system relays and protection systems, the drafting team notes that this requirement is covered under PRC-001-1.1 (*System Protection Coordination*),[18] Requirement R1. It is also noted that manual load shedding, for which the Transmission Operator is responsible, is not in the purview of PRC-010-1 and PRC-010-2, as it is covered under current EOP-003-2 and will subsequently be covered by proposed EOP-011-1 (see Project 2009-03 – Emergency Operations).

10) What about UVLS schemes owned by Transmission Owners, Distribution Providers, or Transmission Operators that are not required by the planner?

The PRC-010-1 and PRC-010-2 Reliability Standards are applicable to the term "UVLS Program." The drafting team notes that, by its defining attributes, a UVLS Program would be required and developed by a Planning Coordinator or Transmission Planner. The nature of a UVLS scheme developed or required by a Distribution Provider, Transmission Operator, or Transmission Owner

[18] http://www.nerc.com/_layouts/PrintStandard.aspx?standardnumber=PRC-001-1.1&title=System%20Protection%20Coordination.

would not meet the attributes of the defined term and would therefore not have the design and characteristics necessary to be subject to the requirements of PRC-010-1 and PRC-010-2.

Requirements R1, R3, R4, and R5

11) What is required to evaluate the coordination referenced in Requirement R1, part 1.2?

Requirement R1 requires each Planning Coordinator or Transmission Planner that develops a UVLS Program to evaluate the program's viability and effectiveness prior to implementation. This evaluation should include studies and analyses used when developing the program that show implementation of the program resolves the identified undervoltage issues that led to its design. These studies and analyses should also show that the UVLS Program is integrated through coordination with generator voltage ride-through capabilities and other protection and control systems. As such, the requirement is meant to provide flexibility for an entity to make the proper determinations, including the considerations for coordination, with respect to program effectiveness based on system characteristics. For further guidance on and examples of coordination considerations, please see the portion of the Guidelines and Technical Basis section under the Requirement R1 heading.

12) Requirements R1, R3, and R4 seem to all require evaluations of program effectiveness—how are they different?

Requirements R1, R3, and R4 do require evaluations of program effectiveness, but they are each at distinct points in time.

Requirement R1 requires evaluation of program effectiveness (by way of the qualifying parts) at the onset of program development, or during the initial planning stage, prior to implementation. Requirement R3 requires the same objectives of an evaluation of effectiveness, but at the point of a mandatory periodic review (at least once every 60 calendar months). Requirement R4 addresses the performance of a UVLS Program after an event (for applicable voltage excursion) to evaluate whether the UVLS Program resolved the undervoltage issues associated with the event.

It is noted that, because of the separate activities of each requirement, UVLS Program deficiencies found as a result of the assessments performed in Requirement R3 or R4 would not be violations of Requirement R1.

13) Requirement R4 would require the Planning Coordinator or Transmission Planner to review all voltage excursions—isn't this unduly burdensome?

While Requirement R4 essentially requires the Planning Coordinator or Transmission Planner to review all voltage excursions to see if they fall below the initializing set points of the UVLS Program, the drafting team contends that it will be clearly evident if voltage falls below the UVLS

threshold because either a) UVLS devices will operate; or b) the system will experience the adverse conditions the UVLS Program was installed to mitigate.

In addition, the drafting team acknowledges that the Planning Coordinator or Transmission Planner may not have the ability to know when voltage excursions are occurring since they are not operating entities. However, a process for the Transmission Operator, Transmission Owner, or Distribution Provider to notify the Transmission Planner or Planning Coordinator of such voltage excursion events is consistent with standard utility practice.

14) PRC-022-1 required the analysis of UVLS Misoperations. How is this addressed in PRC-010-1?

One of the recommendations in the SPCS report was to clearly differentiate between the post-event process of validating the effectiveness of the UVLS program design, its coordination with other protection and control systems, and the potential need to modify the program design (activities addressed in PRC-010-1) and the process of verifying correct operation of UVLS equipment. Because PRC-010-1 was not specific concerning the Misoperation of UVLS equipment, the drafting team made a subsequent revision creating PRC-010-2. Version two (PRC-010-2) now requires that the assessment according to Requirement R4 include the performance (i.e., operation or non-operation) of the UVLS Program equipment.

Relative to the assessment, Requirement R5 requires that a Corrective Action Plan be developed to address any identified deficiencies. This structure ensures that UVLS Program equipment is assessed to identify any Misoperation which could affect BES reliability. Although, the UVLS drafting team maintained during development of PRC-010-1 that verifying correct operation of UVLS equipment should be addressed in PRC-004, the drafting team included UVLS that is intended to trip one or more BES Elements in the proposed PRC-004-5.

Requirements R6, R7, and R8

15) Do Requirements R6, R7, and R8 overlap with the requirements of MOD-032-1?

While both MOD-032-1 (*Data for Power System Modeling and Analysis*)[19] and Requirements R6, R7, and R8 of PRC-010-1 and PRC-010-2 address data requirements, MOD-032-1 establishes overarching modeling data requirements with respect to consistency in format and reporting procedures, whereas the PRC-010-1 and PRC-010-2 requirements address the need to maintain and share data and databases for the purposes of studies for use in event analyses for UVLS Programs specifically. While Reliability Standards in general may have overlap in this manner, the activities in these requirements remain distinctly different.

[19] (http://www.nerc.com/_layouts/PrintStandard.aspx?standardnumber=MOD-032-1&title=Data%20for%20Power%20System%20Modeling%20and%20Analysis).

16) Requirements R6, R7, and R8 appear to be administrative — doesn't this conflict with Paragraph 81 criteria?[20]

Proper maintenance and timely sharing of UVLS Program data as required by Requirements R6, R7, and R8 is necessary to inform the Planning Coordinator or Transmission Planner's studies and analyses. While administrative tasks are required, the tasks have a core reliability-based need.

In addition, Requirements R6, R7, and R8 were written to emulate FERC-approved PRC-006-2 (*Automatic Underfrequency Load Shedding*)[21,22] data requirements. While some of these analogous requirements in PRC-006-2 are listed as candidates for Phase 2 of the Paragraph 81 project, they are not yet approved as meeting the criteria; furthermore, the Independent Expert Review Panel has recommended that these Paragraph 81 candidates not be included for deletion, citing that "there should be a clear expectation for Planning Coordinators to share data necessary to determine their UFLS program parameters."

Rationale

During development of this standard, text boxes were embedded within the standard to explain the rationale for various parts of the standard. Upon BOT approval, the text from the rationale text boxes was moved to this section.

Rationale for Applicability

This standard is applicable to Planning Coordinators and Transmission Planners that have or are developing a UVLS Program, and to Distribution Providers and Transmission Owners responsible for the ownership, operation, or control of UVLS equipment as required by the UVLS Program established by the Transmission Planner or Planning Coordinator. These Distribution Providers and Transmission Owners are referred to as UVLS entities for the purpose of this standard.

The applicability includes both the Planning Coordinator and Transmission Planner because either may be responsible for designing and coordinating the program based on agreements, memorandums of understanding, or tariffs.

The phrase "Planning Coordinator or Transmission Planner" provides the latitude for applicability to the entity that will perform the action. The expectation is not that both parties will perform the action, but rather that the Planning Coordinator and Transmission Planner will engage in discussion to determine the appropriate responsible entity.

Rationale for R1

In Paragraph 1509 from Order No. 693, FERC directed NERC to require an integrated and coordinated approach to all protection systems. The drafting team agrees that a lack of coordination among protection systems is a key risk to reliability, and that each Planning

[20] Refer to Standards Independent Expert Review Project (IERP). (http://www.nerc.com/pa/Stand/Standard%20Development%20Plan/Standards_Independent_Experts_Review_Project_Report-SOTC_and_Board.pdf).
[21] (http://www.nerc.com/_layouts/PrintStandard.aspx?standardnumber=PRC-006-2&title=Automatic%20Underfrequency%20Load%20Shedding).
[22] Adopted by the NERC Board of Trustees on November 14, 2014.

Coordinator or Transmission Planner that develops a UVLS Program should evaluate the program's viability and effectiveness prior to implementation. This evaluation should include studies and analyses used when developing the program that show implementation of the program resolves the identified undervoltage conditions that led to its design. These studies and analyses should also show that the UVLS Program is integrated through coordination with generator voltage ride-through capabilities and other protection and control systems. Though presented as separate items, the drafting team recognizes that the studies that show coordination considerations and that the program addresses undervoltage issues may be interrelated and presented as one comprehensive analysis.

In addition, Requirement R1 also requires the Planning Coordinator or Transmission Planner to provide the UVLS Program's specifications and implementation schedule to applicable UVLS entities to implement the program. It is noted that studies to evaluate the effectiveness of the program should be completed prior to providing the specifications and schedule.

Rationale for R2

UVLS entities must implement a UVLS Program or address any necessary corrective actions for a UVLS Program according to the specifications and schedule provided by the Planning Coordinator or Transmission Planner. If UVLS entities do not implement the UVLS Program according to the specifications and schedule provided, the UVLS Program may not be effective and may not achieve its intended goal.

Rationale for R3

A periodic comprehensive assessment (detailed analysis) should be conducted to identify and catalogue the accumulated effects of minor changes to the system that have occurred since the last assessment was completed, and should include an evaluation of each UVLS Program to ensure the continued integration through coordination. This comprehensive assessment supplements the NERC Reliability Standard TPL-001-4 annual assessment requirement to evaluate the impact of protection systems.

Based on the drafting team's knowledge and experience, and in keeping with time frames contained in similar requirements from other PRC Reliability Standards, 60 calendar months was determined to be the maximum amount of time allowable between assessments. Assessments will be performed sooner than the end of the 60-calendar month period if the Planning Coordinator or Transmission Planner determines that there are material changes to system topology or operating conditions that affect the performance of a UVLS Program. Note that the 60-calendar-month time frame would reset after each assessment.

Rationale for R4

A UVLS Program not functioning as expected during a voltage excursion event for which the UVLS Program was designed to operate presents a critical risk to system reliability. Therefore, a timely assessment to evaluate (1) whether the UVLS Program resolved the undervoltage issues and (2) the performance of the UVLS Program equipment associated with the applicable event is essential. The 12 calendar months (from the date of the event) provides adequate time to coordinate with other Planning Coordinators, Transmission Planners, Transmission Operators,

and UVLS entities, simulate pre- and post-event conditions, and complete the performance assessment.

Rationale for R5

If program deficiencies are identified during an assessment performed in either Requirement R3 or R4, the Planning Coordinator or Transmission Planner must develop a Corrective Action Plan (CAP) to address the deficiencies. Based on the drafting team's knowledge and experience with UVLS studies, three calendar months was determined to provide a judicious balance between the reliability need to address deficiencies expeditiously and the time needed to consider potential solutions, coordinate resources, develop a CAP and implementation schedule, and provide the CAP and schedule to UVLS entities.

It is noted that the three-month time frame is only to develop the CAP and provide it to UVLS entities and does not encompass the time UVLS entities have to implement the CAP. Requirement R2 requires UVLS entities to execute the CAP according to the schedule provided by the Planning Coordinator or Transmission Planner.

Rationale for R6

Having accurate and current data is required for the Planning Coordinator to perform undervoltage studies and for use in event analyses. Requirement R6 supports this reliability need by requiring the Planning Coordinator to update its UVLS Program database at least once each calendar year.

Rationale for R7

Having accurate and current data is required for the Planning Coordinator to perform undervoltage studies and for use in event analyses. Requirement R7 supports this reliability need by requiring the UVLS entity to provide UVLS Program data in accordance with specified parameters.

Rationale for R8

Requirement R8 supports the integrated and coordinated approach to UVLS programs directed by Paragraph 1509 of Order No. 693 by requiring that UVLS Program data be shared with neighboring Planning Coordinators and Transmission Planners within a reasonable time period. Requests for the database should also be fulfilled for those functional entities that have a reliability need for the data (such as the Transmission Operators that develop System Operating Limits and Reliability Coordinators that develop Interconnection Reliability Operating Limits).

Exhibit B

Implementation Plans

Implementation Plan for Reliability Standard PRC-004-5

NERC
NORTH AMERICAN ELECTRIC RELIABILITY CORPORATION

Implementation Plan

PRC-004-5 – Protection System Misoperation Identification and Correction

Project 2008-02.2 – Phase 2 UVLS: Misoperations

Requested Approvals

- PRC-004-5 – Protection System Misoperation Identification and Correction

Requested Retirements

- PRC-004-4 – Protection System Misoperation Identification and Correction[1]

Prerequisite Approvals

- PRC-010-2 – Undervoltage Load Shedding

General Considerations

The implementation period is intended to align with the Effective Date of PRC-010-1 or occurring soon thereafter in order to incorporate certain aspects of PRC-022-1 – Under-Voltage Load Shedding Program Performance into PRC-004-5. The standard PRC-022-1 was retired by PRC-010-1. The Implementation Plan for PRC-010-1[2] allows twelve (12) calendar months after applicable approvals. Version two of PRC-010 is including undervoltage load shedding (UVLS) that is included in a UVLS Program.

Applicable Entities

- Transmission Owner
- Generator Owner
- Distribution Provider

[1] PRC-004-4 was adopted by the NERC Board of Trustees on November 13, 2014. PRC-004-4 is pending adoption or approval by applicable governmental authorities. PRC-004-5 will retire PRC-004-3 if PRC-004-4 is not adopted or approved by an applicable governmental authority.

[2] Refer to Project 2008-02.2 on the NERC website. (http://www.nerc.com/pa/Stand/Pages/Project-2008-02_2-Phase-2-Undervoltage-Load-Shedding-UVLS-Misoperations.aspx)

Effective Dates

PRC-004-5 shall become effective on the later of the first day following the Effective Date of PRC-010-1 or the first day of the first calendar quarter after the standard is approved by an applicable governmental authority or as otherwise provided for in a jurisdiction where approval by an applicable governmental authority is required for a standard to go into effect. Where approval by an applicable governmental authority is not required, the standard shall become effective on the later of the first day following the Effective Date of PRC-010-1 or the first day of the first calendar quarter after the date the standard is adopted by the NERC Board of Trustees or as otherwise provided for in that jurisdiction.

Implementation Plan for Reliability Standard PRC-010-2

NERC
NORTH AMERICAN ELECTRIC RELIABILITY CORPORATION

Implementation Plan

PRC-010-2 – Undervoltage Load Shedding

Project 2008-02.2 – Phase 2 UVLS: Misoperations

Requested Approvals

- PRC-010-2 – Undervoltage Load Shedding

Requested Retirements

- PRC-010-1 – Undervoltage Load Shedding[1]

Prerequisite Approvals

- PRC-004-5 — Protection System Misoperation Identification and Correction

General Considerations

The implementation period is intended to align with the Effective Date of PRC-010-1 or occur soon thereafter in order to incorporate certain aspects of PRC-022-1 – Under-Voltage Load Shedding Program Performance into PRC-010-2. PRC-022-1 was retired by PRC-010-1. The Implementation Plan for PRC-010-1[2] allows twelve (12) calendar months after applicable approvals. Version five of PRC-004 is including undervoltage load shedding (UVLS) that is intended to trip one or more BES Elements.

Applicable Entities

- Planning Coordinator
- Transmission Planner
- Undervoltage load shedding (UVLS) entities – Distribution Providers and Transmission Owners responsible for the ownership, operation, or control of UVLS equipment as required by the UVLS Program established by the Transmission Planner or Planning Coordinator

Effective Dates

PRC-010-2 shall become effective on the later of the first day following the Effective Date of PRC-010-1 or the first day of the first calendar quarter after the standard is approved by an applicable governmental authority or as otherwise provided for in a jurisdiction where approval by an applicable governmental authority is required for a standard to go into effect. Where approval by an applicable governmental authority is not required, the standard shall become effective on the later of the first day following the Effective Date of PRC-010-1 or the first day of the first calendar quarter after the date the standard is adopted by the NERC Board of Trustees or as otherwise provided for in that jurisdiction.

[1] PRC-010-1 was adopted by the NERC Board of Trustees on November 13, 2014.

[2] Refer to Project 2008-02.2 on the NERC website. (http://www.nerc.com/pa/Stand/Pages/Project-2008-02_2-Phase-2-Undervoltage-Load-Shedding-UVLS-Misoperations.aspx)

Exhibit C

Order No. 672 Criteria

Omitted

Exhibit D
Mapping Document

Mapping Document

Project 2008-02.2 Phase 2: Undervoltage Load Shedding

During development of PRC-010-1, the standard drafting team provided the following explanation on its approach to cover Misoperation of UVLS equipment in future work:

> "As PRC-022-1 addresses UVLS equipment Misoperations, the UVLS drafting team's intention is for PRC-004 to address Misoperations of UVLS Program equipment. A change to make PRC-004 explicitly applicable to UVLS Program equipment will be addressed once PRC-004-3 – Protection System Misoperation Identification and Correction[1] is completed under Project 2010-05.1 – Misoperations (Phase 1 of Protection Systems)."

The table below demonstrates how proposed changes map from the retirement of PRC-022-1 (retired by the initial 2008-02 project) to the proposed PRC-010-2. The revisions are being proposed to provide additional clarity with the aligning revisions being proposed in PRC-004-5 as shown in Table 2.

[1] PRC-004-3 was surpassed by version four which addressed applicability to dispersed generation resources under Project 2014-01.

Table 1: Mapping PRC-022-1 to PRC-010-2		
Requirement in Approved PRC-022-1 Reliability Standard	**Translation to New Standard or Other Action**	**Proposed Language in PRC-010-2 or Comments**
R1. Each Transmission Operator, Load-Serving Entity, and Distribution Provider that operates a UVLS program to mitigate the risk of voltage collapse or voltage instability in the BES shall **analyze and document all UVLS operations and Misoperations**. The analysis shall include:* **R1.5** For any Misoperation, a Corrective Action Plan to avoid future Misoperations of a similar nature. *Sub-requirements R1.1 through R1.4 have been omitted because they were addressed in Project 2008-02 during development of PRC-010-1.	PRC-010-2 proposes Part 4.2 to provide additional clarity that UVLS equipment operations and Misoperations are addressed by Requirement R4 through the Planning Coordinator or Transmission Planner assessment. Part 4.1 was originally embedded in the main Requirement R4 of PRC-010-1 and is now shown as a new Part 4.1 now. Part 4.2 is being proposed to provide the necessary clarity that the assessment conducted following an event that resulted in a voltage excursion for which its UVLS Program was designed to operate must include UVLS Program equipment.	**R4.** Each Planning Coordinator or Transmission Planner shall, within 12 calendar months of an event that resulted in a voltage excursion for which its UVLS Program was designed to operate, perform an assessment to evaluate: **4.1.** whether its UVLS Program resolved the undervoltage issues associated with the event, and **(Proposed) 4.2.** the performance (i.e., operation and non-operation) of the UVLS Program equipment.

Table 1: Mapping PRC-022-1 to PRC-010-2		
Requirement in Approved PRC-022-1 Reliability Standard	**Translation to New Standard or Other Action**	**Proposed Language in PRC-010-2 or Comments**
	Part 4.2 requires the Planning Coordinator or Transmission Planner to assess the UVLS equipment performance and address any deficiencies in a Corrective Action Plan (CAP) as required by PRC-010-2, Requirement R5. The clause "in its UVLS Program" was removed to clarify the Corrective Action Plan is addressing components of the assessment, which is about the UVLS Program.	**R5.** Each Planning Coordinator or Transmission Planner that identifies deficiencies during an assessment performed in either Requirement R3 or R4 shall develop a Corrective Action Plan to address the deficiencies and subsequently provide the Corrective Action Plan, including an implementation schedule, to UVLS entities within three calendar months of completing the assessment.

Table 2: Mapping PRC-022-1 to PRC-004-5		
Requirement in Approved PRC-022-1 Reliability Standard	**Translation to New Standard or Other Action**	**Proposed Language in PRC-004-5 or Comments**
R1. Each Transmission Operator, Load-Serving Entity, and Distribution Provider that operates a UVLS program to mitigate the risk of voltage collapse or voltage instability in the BES shall **analyze and document all UVLS operations and Misoperations**. The analysis shall include:* **R1.5** For any Misoperation, a Corrective Action Plan to avoid future Misoperations of a similar nature. *Sub-requirements R1.1 through R1.4 have been omitted because they were addressed in Project 2008-02 during development of PRC-010-1.	The proposed Applicability 4.2.3 addresses the clause "analyze and document all UVLS operations and Misoperations" in PRC-022-1, Requirement R1. The standard PRC-004-5, Requirement R5 requires a Corrective Action Plan (CAP) to be developed for a known cause of a Misoperation and addresses Requirement R1.5. Requirement R6 requires the implementation of the CAP.	**(Proposed) 4.2.3** Undervoltage load shedding (UVLS) that is intended to trip one or more BES Elements. **R5.** Each Transmission Owner, Generator Owner, and Distribution Provider that owns the Protection System component(s) that caused the Misoperation shall, within 60 calendar days of first identifying a cause of the Misoperation: [Violation Risk Factor: Medium] [Time Horizon: Operations Planning, Long-Term Planning] • Develop a Corrective Action Plan (CAP) for the identified Protection System component(s), and an evaluation of the CAP's applicability to the entity's other Protection Systems including other locations; or

Table 2: Mapping PRC-022-1 to PRC-004-5		
Requirement in Approved PRC-022-1 Reliability Standard	**Translation to New Standard or Other Action**	**Proposed Language in PRC-004-5 or Comments**
		• Explain in a declaration why corrective actions are beyond the entity's control or would not improve BES reliability, and that no further corrective actions will be taken. **R6.** Each Transmission Owner, Generator Owner, and Distribution Provider shall implement each CAP developed in Requirement R5, and update each CAP if actions or timetables change, until completed.

Exhibit E

Analysis of Violation Risk Factors and Violation Severity Levels

Exhibit E-1
Analysis of Violation Risk Factors and Violation Severity Levels for Proposed Reliability Standard PRC-004-3

NERC
NORTH AMERICAN ELECTRIC RELIABILITY CORPORATION

Violation Risk Factors and Violation Severity Level Justifications

PRC-004-3 – Protection System Misoperation Identification and Correction

Project 2010-05.1 – Protection System (Misoperations)

Violation Risk Factor and Violation Severity Level Justifications

This document provides the drafting team's justification for assignment of violation risk factors (VRFs) and violation severity levels (VSLs) for each requirement in: PRC-004-3 – Protection System Misoperation Identification and Correction.

Each primary requirement is assigned a VRF and a set of one or more VSLs. These elements support the determination of an initial value range for the base penalty amount regarding violations of requirements in FERC-approved Reliability Standards, as defined in the ERO Sanction Guidelines.

The Protection System Misoperations Standard Drafting Team applied the following NERC criteria and FERC Guidelines when proposing VRFs and VSLs for the requirements under this project.

NERC Criteria - Violation Risk Factors

High Risk Requirement

A requirement that, if violated, could directly cause or contribute to bulk electric system instability, separation, or a cascading sequence of failures, or could place the bulk electric system at an unacceptable risk of instability, separation, or cascading failures; or, a requirement in a planning time frame that, if violated, could, under emergency, abnormal, or restorative conditions anticipated by the preparations, directly cause or contribute to bulk electric system instability, separation, or a cascading sequence of failures, or could place the bulk electric system at an unacceptable risk of instability, separation, or cascading failures, or could hinder restoration to a normal condition.

Medium Risk Requirement

A requirement that, if violated, could directly affect the electrical state or the capability of the bulk electric system, or the ability to effectively monitor and control the bulk electric system. However, violation of a medium risk requirement is unlikely to lead to bulk electric system instability, separation, or cascading failures; or, a requirement in a planning time frame that, if

violated, could, under emergency, abnormal, or restorative conditions anticipated by the preparations, directly and adversely affect the electrical state or capability of the bulk electric system, or the ability to effectively monitor, control, or restore the bulk electric system. However, violation of a medium risk requirement is unlikely, under emergency, abnormal, or restoration conditions anticipated by the preparations, to lead to bulk electric system instability, separation, or cascading failures, nor to hinder restoration to a normal condition.

Lower Risk Requirement

A requirement that is administrative in nature and a requirement that, if violated, would not be expected to adversely affect the electrical state or capability of the bulk electric system, or the ability to effectively monitor and control the bulk electric system; or, a requirement that is administrative in nature and a requirement in a planning time frame that, if violated, would not, under the emergency, abnormal, or restorative conditions anticipated by the preparations, be expected to adversely affect the electrical state or capability of the bulk electric system, or the ability to effectively monitor, control, or restore the bulk electric system. A planning requirement that is administrative in nature.

FERC Violation Risk Factor Guidelines

The standard drafting team (SDT) also considered consistency with the FERC Violation Risk Factor Guidelines for setting VRFs:[1]

Guideline (1) — Consistency with the Conclusions of the Final Blackout Report

The Commission seeks to ensure that Violation Risk Factors assigned to Requirements of Reliability Standards in these identified areas appropriately reflect their historical critical impact on the reliability of the Bulk-Power System.

In the VRF Order, FERC listed critical areas (from the Final Blackout Report) where violations could severely affect the reliability of the Bulk-Power System: [2]

- Emergency operations
- Vegetation management
- Operator personnel training
- Protection systems and their coordination

[1] *N. Am. Elec. Reliability Corp.*, 119 FERC ¶ 61,145 (2007) ("VRF Order"), *order on reh'g and compliance filing*, 120 FERC ¶ 61,145 (2007) ("VRF Rehearing Order").
[2] *Id.* at fn 15.

- Operating tools and backup facilities
- Reactive power and voltage control
- System modeling and data exchange
- Communication protocol and facilities
- Requirements to determine equipment ratings
- Synchronized data recorders
- Clearer criteria for operationally critical facilities
- Appropriate use of transmission loading relief

Guideline (2) — Consistency within a Reliability Standard

The Commission expects a rational connection between the sub-Requirement Violation Risk Factor assignments and the main Requirement Violation Risk Factor assignment.

Guideline (3) — Consistency among Reliability Standards

The Commission expects the assignment of Violation Risk Factors corresponding to Requirements that address similar reliability goals in different Reliability Standards would be treated comparably.

Guideline (4) — Consistency with NERC's Definition of the Violation Risk Factor Level

Guideline (4) was developed to evaluate whether the assignment of a particular Violation Risk Factor level conforms to NERC's definition of that risk level.

Guideline (5) — Treatment of Requirements that Co-mingle More Than One Obligation

Where a single Requirement co-mingles a higher risk reliability objective and a lesser risk reliability objective, the VRF assignment for such Requirements must not be watered down to reflect the lower risk level associated with the less important objective of the Reliability Standard.

VRF Discussion

The discussion below in the tables addresses how the SDT considered FERC's VRF Guidelines 1 through 5. PRC-004-3 – Protection System Misoperation Identification and Correction is a

revision of PRC-004-2.1a – Analysis and Mitigation of Transmission and Generation Protection System Misoperations and combines the reliability intent of the two legacy standards PRC-003-1 and PRC-004-2.1a.

The proposed PRC-004-3 Reliability Standard has six (6) discrete requirements that incorporate and enhance the intent of the requirements of PRC-004-2.1a and PRC-003-1.[3] First, the revised standard requires the Transmission Owner, Generator Owner, and Distribution Provider to review each BES interrupting device operation meeting the criteria in Requirement R1, which includes: when caused by a Protection System operation or by manual intervention in response to a Protection System failure to operate and identify each that is a Misoperation; regardless of whether the BES interrupting device owner owns all or part of the Composite Protection System; and when BES interrupting device owner identified that its Protection System component(s) caused the BES interrupting device(s) operation.

Second, the BES interrupting device owner is required to notify the other Composite Protection System component owner(s) when the criteria in Requirement R2 are met, which includes: Composite Protection System ownership is shared with another owner; the BES interrupting device owner determined that a Misoperation occurred or cannot rule out a Misoperation; and the BES interrupting device owner determined that its Protection System component(s) did not cause the BES interrupting device(s) operation or is unsure.

Third, if a Transmission Owner, Generator Owner, or Distribution Provider is notified by a BES interrupting device owner that the Composite Protection System operated, it must review the operation according to Requirement R3. In most cases, Requirement R1 or R3 will reveal the cause of the Misoperation. If not, Requirement R4 mandates the entity perform investigative action(s) to determine the cause(s) as the fourth discrete Requirement. If a cause is not identified, the entity either may continue its investigation until a cause is identified or the entity may write a declaration that no cause was identified. If a cause is identified, the entity advances to the fifth Requirement.

In Requirement R5, the entity whose Protection System component was identified as the cause of the Misoperation must either develop a Corrective Action Plan (CAP) or explain in a declaration why it cannot correct the cause of the Misoperation. In developing a Corrective Action Plan (CAP) for the identified Protection System component(s), the entity must perform an evaluation of the CAP's applicability to the entity's other Protection Systems including other locations. If the entity determines that corrective actions are beyond the entity's control or would not improve BES reliability, it must explain this in a declaration why no further corrective actions will be taken.

In the last Requirement R6, the entity must implement and complete the CAP. The entity must update the CAP during implementation when actions or timetables change.

[3] The Reliability Standard PRC-003-1 – Regional Procedure for Analysis of Misoperations of Transmission and Generation Protection Systems requires Regional Entities to establish procedures for analysis of Misoperations.

The requirements of the proposed PRC-004-3 do not map, one-to-one, with the Requirements of the two legacy standards, PRC-003-1 and PRC-004-2.1a. The new Requirements comingle various reliability attributes of the legacy standards with precise reliability objectives. In developing the new VRFs for the Requirements of PRC-004-3, the Standard Drafting Team carefully considered the NERC criteria for developing VRFs, as well as the FERC VRF guidelines. The VRFs of the FERC approved PRC-004-2.1a – Analysis and Mitigation of Transmission and Generation Protection System Misoperations (R1 & R2 – High VRF), PRC-004-WECC-1 – Protection System and Remedial Action Scheme Misoperation (R1 – Lower VRF), PRC-016-0.1 – Special Protection System Misoperation (R2 – Medium VRF), and PRC-022-1 – Under-Voltage Load Shedding Program Performance (R1 & R1.5 – Medium VRF), all influenced (citing FERC VRF Guideline 3) the drafting team's VRF decisions, as such, the VRFs for PRC-004-3 Requirements R1 through R6 are assigned a VRF of Medium.

NERC Criteria - Violation Severity Levels

Violation Severity Levels (VSLs) define the degree to which compliance with a requirement was not achieved. Each requirement must have at least one VSL. While it is preferable to have four VSLs for each requirement, some requirements do not have multiple "degrees" of noncompliant performance and may have only one, two, or three VSLs.

Violation severity levels should be based on the guidelines shown in the table below:

Lower	Moderate	High	Severe
Missing a minor element (or a small percentage) of the required performance The performance or product measured has significant value as it almost meets the full intent of the requirement.	Missing at least one significant element (or a moderate percentage) of the required performance. The performance or product measured still has significant value in meeting the intent of the requirement.	Missing more than one significant element (or is missing a high percentage) of the required performance or is missing a single vital component. The performance or product has limited value in meeting the intent of the requirement.	Missing most or all of the significant elements (or a significant percentage) of the required performance. The performance measured does not meet the intent of the requirement or the product delivered cannot be used in meeting the intent of the requirement.

FERC Order on Violation Severity Levels

In its June 19, 2008 Order on Violation Severity Levels, FERC indicated it would use the following four guidelines for determining whether to approve VSLs:

Guideline 1: Violation Severity Level Assignments Should Not Have the Unintended Consequence of Lowering the Current Level of Compliance

Compare the VSLs to any prior Levels of Non-compliance and avoid significant changes that may encourage a lower level of compliance than was required when Levels of Non-compliance were used.

Guideline 2: Violation Severity Level Assignments Should Ensure Uniformity and Consistency in the Determination of Penalties

Guideline 2a: A violation of a "binary" type requirement must be a "Severe" VSL.

Guideline 2b: Do not use ambiguous terms such as "minor" and "significant" to describe noncompliant performance.

Guideline 3: Violation Severity Level Assignment Should Be Consistent with the Corresponding Requirement

VSLs should not expand on what is required in the requirement.

Guideline 4: Violation Severity Level Assignment Should Be Based on A Single Violation, Not on A Cumulative Number of Violations

. . . unless otherwise stated in the requirement, each instance of non-compliance with a requirement is a separate violation. Section 4 of the Sanction Guidelines states that assessing penalties on a per violation per day basis is the "default" for penalty calculations.

VRF and VSL Justifications – PRC-004-3, R1	
Proposed VRF	**Medium**
NERC VRF Discussion	A Violation Risk Factor of Medium is consistent with the NERC VRF Guidelines. Failure to review each BES interrupting device operation caused by a Protection System operation or by manual intervention in response to a Protection System failure to operate for Misoperation could, in the planning time frame, under emergency, abnormal, or restorative conditions anticipated by the preparations, directly and adversely affect the electrical state or capability of the bulk electric system, or the ability to effectively monitor, control, or restore the bulk electric system. Composite Protection System operations reviewed for proper operation by an owner is the first step in preventing the future severity of disturbances affecting a wider area, or potential equipment damage. However, violation of this requirement is not in itself likely to lead to bulk electric system instability, separation, or cascading failures.
FERC VRF G1 Discussion	Guideline 1- Consistency w/ Blackout Report: The blackout report and subsequent technical analysis noted that zone 3 relays increased the severity of the blackout. Reviewing Protection Systems for Misoperation, identifying an unnecessary operation and taking corrective actions would reduce the likelihood of reoccurrence. This requirement is consistent with Recommendation 8: Improve System Protection to Slow or Limit the Spread of Future Cascading Outages.
FERC VRF G2 Discussion	Guideline 2- Consistency within a Reliability Standard: This requirement has a single reliability activity associated with the reliability objective and no sub-Requirement(s) which allows a single VRF to be assigned; therefore no conflict(s) exist.
FERC VRF G3 Discussion	Guideline 3- Consistency among Reliability Standards:

VRF and VSL Justifications – PRC-004-3, R1	
	This requirement replaces one of the three performance components of PRC-004-2a, R1 (TO & DP) and R2 (GO), which both have a VRF of "High." The three performance components (paraphrased) are "analyze Protection System Misoperations," "develop a Correction Action Plan," and "implement a Corrective Action Plan". The performance activity that has been isolated in Requirement R1 of PRC-004-3, to "review" (similar to "analyze"), is consistent with similar requirements in Reliability Standards PRC-016-0.1 – Special Protection System Misoperations, R1 ("…shall analyze its SPS operations and maintain a record of all misoperations…") and PRC-022-1 – Under-Voltage Load Shedding Program Performance, R1 ("…shall analyze and document all UVLS operations and Misoperations.") which both have a VRF of Medium. A VRF of Medium does not inadvertently lower the current VRF of High in the former PRC-004-2.1a, Requirements R1 and R2, because this Requirement now provides a clear and concise single reliability activity whereas the former Requirement comingles multiple activities
FERC VRF G4 Discussion	Guideline 4- Consistency with NERC Definitions of VRFs: Failure to review each BES interrupting device operation caused by a Protection System operation or by manual intervention in response to a Protection System failure to operate for Misoperation could, in the planning time frame, under emergency, abnormal, or restorative conditions anticipated by the preparations, directly and adversely affect the electrical state or capability of the bulk electric system, or the ability to effectively monitor, control, or restore the bulk electric system. Protection System operations reviewed for proper operation by their owner(s) is the first step in preventing the future severity of disturbances affecting a wider area, or potential equipment damage.
FERC VRF G5 Discussion	Guideline 5- Treatment of Requirements that Co-mingle More than One Obligation: This requirement does not co-mingle reliability objectives of differing risk; therefore, the assigned VRF of Medium is consistent.

VRF and VSL Justifications – PRC-004-3, R1			
Proposed VSL			
Lower	**Moderate**	**High**	**Severe**
The responsible entity identified whether its Protection System component(s) caused a Misoperation in accordance with Requirement R1, but in more than 120 calendar days and less than or equal to 150 calendar days of the BES interrupting device operation.	The responsible entity identified whether its Protection System component(s) caused a Misoperation in accordance with Requirement R1, but in more than 150 calendar days and less than or equal to 165 calendar days of the BES interrupting device operation.	The responsible entity identified whether its Protection System component(s) caused a Misoperation in accordance with Requirement R1, but in more than 165 calendar days and less than or equal to 180 calendar days of the BES interrupting device operation.	The responsible entity identified whether its Protection System component(s) caused a Misoperation in accordance with Requirement R1, but in more than 180 calendar days of the BES interrupting device operation. OR The responsible entity failed to identify whether its Protection System component(s) caused a Misoperation in accordance with Requirement R1.
NERC VSL Guidelines	Meets NERC's VSL Guidelines—There is an incremental aspect to the VSL for tardiness and a binary aspect for failure. The VSL is entity size-neutral because performance is event-driven and not by individual assets.		

VRF and VSL Justifications – PRC-004-3, R1	
FERC VSL G1 Violation Severity Level Assignments Should Not Have the Unintended Consequence of Lowering the Current Level of Compliance	This requirement replaces one of the three performance components of PRC-004-2a, R1 (TO & DP) and R2 (GO). The three performance components (paraphrased) are “analyze Protection System Misoperations,” “develop a Correction Action Plan,” and “implement a Corrective Action Plan.” The VSLs are based on the three components and not individually as presented in the proposed PRC-004-3 standard. This VSL does not lower the current level of compliance because the former VSL was comingled with the other activities. The VSLs appropriately assess the severity of the violation with the failure to perform a review for Misoperation as Severe.
FERC VSL G2 Violation Severity Level Assignments Should Ensure Uniformity and Consistency in the Determination of Penalties Guideline 2a: The Single Violation Severity Level Assignment Category for "Binary" Requirements Is Not Consistent Guideline 2b: Violation Severity Level Assignments that Contain Ambiguous Language	Guideline 2a: This requirement is not binary; therefore, this criterion does not apply. Guideline 2b: This VSL does not use any ambiguous terminology, thereby supporting uniformity and consistency in the determination of similar penalties for similar violations.
FERC VSL G3	This VSL uses similar terminology to that used in the associated requirement, and is therefore consistent with this Requirement.

VRF and VSL Justifications – PRC-004-3, R1	
Violation Severity Level Assignment Should Be Consistent with the Corresponding Requirement	
FERC VSL G4 Violation Severity Level Assignment Should Be Based on A Single Violation, Not on A Cumulative Number of Violations	The VSL is based on a single violation and not cumulative violations.

VRF and VSL Justifications – PRC-004-3, R2	
Proposed VRF	**Medium**
NERC VRF Discussion	A Violation Risk Factor of Medium is consistent with the NERC VRF Guidelines. Failure to notify the other owner(s) of a Composite Protection System when the initiating owner determined its Protection System components did not cause a Misoperation or it did not rule out a Misoperation, could in the planning time frame, under emergency, abnormal, or restorative conditions anticipated by the preparations, directly and adversely affect the electrical state or capability of the bulk electric system, or the ability to effectively monitor, control, or restore the bulk electric system.

VRF and VSL Justifications – PRC-004-3, R2	
	Unresolved Misoperations of Composite Protection Systems owned by others that are not ruled out as a Misoperation could affect the electrical state or capability of the bulk electric system, or the ability to effectively monitor, control, or restore the bulk electric system by creating a gap in analysis.
FERC VRF G1 Discussion	Guideline 1- Consistency w/ Blackout Report: This is consistent with Recommendation 8: Improve System Protection to Slow or Limit the Spread of Future Cascading Outages. A lack of coordination on system protection was one of eight factors common to substantive outages prior to and including the August 14, 2003 Blackout. The initiating entity in the planning time frame is required to notify the other owner(s) of the Composite Protection System component(s) when it determines that (or is unsure whether)its component(s) did not cause a Misoperation or when it is unable to rule out a Misoperation of the Composite Protection System owned by others. This ensures that all owners review their equipment for proper operation which may include checking for proper coordination depending on the circumstances.
FERC VRF G2 Discussion	Guideline 2- Consistency within a Reliability Standard: This requirement has a single reliability activity associated with the reliability objective and no sub-Requirement(s) which allows a single VRF to be assigned; therefore no conflict(s) exist.
FERC VRF G3 Discussion	Guideline 3- Consistency among Reliability Standards:

VRF and VSL Justifications – PRC-004-3, R2	
	This requirement replaces one of the three performance components of PRC-004-2a, R1 (TO & DP) and R2 (GO), which both have a VRF of High. The three performance components (paraphrased) are "analyze Protection System Misoperations," "develop a Correction Action Plan," and "implement a Corrective Action Plan". This requirement and a VRF assignment of Medium is consistent, for example, with Reliability Standards FAC-008-3 – Facility Ratings, R7 ("…shall provide Facility Ratings (for its solely and jointly owned Facilities…"), MOD-012-0 – Dynamics Data for Modeling and Simulation of the Interconnected Transmission System, R2 ("…shall provide appropriate equipment characteristics and system data…"), IRO-015-1 – Special Protection System Data and Documentation, R1.1 ("…shall make notifications to other Reliability Coordinators of conditions in its Reliability Coordinator Area that may impact other Reliability Coordinator Areas."), and IRO-016-1 – Coordination of Real-time Activities Between Reliability Coordinators, R1 ("…shall contact the other Reliability Coordinator(s) to confirm that there is a problem and then discuss options and decide upon a solution to prevent or resolve the identified problem.") which all have a VRF of Medium. Other Protection Systems based Reliability Standards such as PRC-005-1b – Transmission and Generation Protection System Maintenance and Testing, R2 ("…shall provide documentation…"), PRC-016-0.1 – Special Protection System Misoperations, R3 ("…that owns an SPS shall provide documentation of the misoperation analyses…"), and PRC-017-0 – Special Protection System Maintenance and Testing, R2 ("…SPS shall provide documentation of the program…) all have a VRF of Lower; however, these requirements involve the administrative reporting to either the Regional Reliability Organization (now Regional Entity) or NERC and not a reliability function like the previously mentioned FAC-008-3 and MOD-012-0 Reliability Standards. As such, this Requirement R2 is assigned a VRF of Medium because it has a reliability need to be communicated to other owners.
FERC VRF G4 Discussion	Guideline 4- Consistency with NERC Definitions of VRFs:

VRF and VSL Justifications – PRC-004-3, R2	
	Failure to notify other entities to review each Protection System operation, identify Misoperations, and determine the cause could in the planning time frame, under emergency, abnormal, or restorative conditions anticipated by the preparations, directly and adversely affect the electrical state or capability of the bulk electric system, or the ability to effectively monitor, control, or restore the bulk electric system. Unresolved Misoperations of Composite Protection Systems owned by others that are not ruled out as a Misoperation could contribute to the severity of future disturbances affecting a wider area, or potential equipment damage.
FERC VRF G5 Discussion	Guideline 5- Treatment of Requirements that Co-mingle More than One Obligation: This requirement does not co-mingle reliability objectives of differing risk; therefore, the assigned VRF of Medium is consistent.

Proposed VSL			
Lower	**Moderate**	**High**	**Severe**
The responsible entity notified the other owner(s) of the Protection System component(s) in accordance with Requirement R2, but in more than 120 calendar days and less than or equal to 150 calendar days of the BES interrupting device operation.	The responsible entity notified the other owner(s) of the Protection System component(s) in accordance with Requirement R2, but in more than 150 calendar days and less than or equal to 165 calendar days of the BES interrupting device operation.	The responsible entity notified the other owner(s) of the Protection System component(s) in accordance with Requirement R2, but in more than 165 calendar days and less than or equal to 180 calendar days of the BES interrupting device operation.	The responsible entity notified the other owner(s) of the Protection System component(s) in accordance with Requirement R2, but in more than 180 calendar days of the BES interrupting device operation. OR

VRF and VSL Justifications – PRC-004-3, R2			
			The responsible entity failed to notify one or more of the other owner(s) of the Protection System component(s) in accordance with Requirement R2.
NERC VSL Guidelines	Meets NERC's VSL Guidelines—There is an incremental aspect to the VSL for tardiness and a binary aspect for failure. The VSL is entity size-neutral because performance is event-driven and not by individual assets.		
FERC VSL G1 Violation Severity Level Assignments Should Not Have the Unintended Consequence of Lowering the Current Level of Compliance	This requirement is new to the standard and had no previous level of compliance. Other Reliability Standards use a variety of VSLs ranging from a single severe level (i.e., binary), two levels, to four VSL levels. Some use a percentage as the failure of the number entities not notified; however, this would not be practical for this requirement as Composite Protection Systems that are owned by multiple entities is generally limited to one or two owners. The incremental increase in violation is consistent with the NERC Guidelines and is reasonable in consideration of the time periods provided by the Requirement.		
FERC VSL G2 Violation Severity Level Assignments Should Ensure Uniformity and Consistency in the Determination of Penalties	Guideline 2a: This requirement is not binary; therefore, this criterion does not apply. Guideline 2b:		

VRF and VSL Justifications – PRC-004-3, R2	
Guideline 2a: The Single Violation Severity Level Assignment Category for "Binary" Requirements Is Not Consistent Guideline 2b: Violation Severity Level Assignments that Contain Ambiguous Language	This VSL does not use any ambiguous terminology, thereby supporting uniformity and consistency in the determination of similar penalties for similar violations.
FERC VSL G3 Violation Severity Level Assignment Should Be Consistent with the Corresponding Requirement	This VSL uses similar terminology to that used in the associated requirement, and is therefore consistent with this Requirement.
FERC VSL G4 Violation Severity Level Assignment Should Be Based on A Single Violation, Not on A Cumulative Number of Violations	The VSL is based on a single violation and not cumulative violations.

VRF and VSL Justifications – PRC-004-3, R3	
Proposed VRF	**Medium**
NERC VRF Discussion	A Violation Risk Factor of Medium is consistent with the NERC VRF Guidelines. Failure of another Composite Protection System owner to review its component(s) for Misoperation, upon notification, for each BES interrupting device operation caused by a Protection System operation or by manual intervention in response to a Protection System failure to operate could in the planning time frame, under emergency, abnormal, or restorative conditions anticipated by the preparations, directly and adversely affect the electrical state or capability of the bulk electric system, or the ability to effectively monitor, control, or restore the bulk electric system. Composite Protection System operations reviewed for proper operation by the other owner(s) is an important step in preventing the future severity of disturbances affecting a wider area, or potential equipment damage.
FERC VRF G1 Discussion	Guideline 1- Consistency w/ Blackout Report: The blackout report and subsequent technical analysis noted that zone 3 relays increased the severity of the blackout. Reviewing Protection Systems for Misoperation, identifying an unnecessary operation and taking corrective actions would reduce the likelihood of reoccurrence. This requirement is consistent with Recommendation 8: Improve System Protection to Slow or Limit the Spread of Future Cascading Outages.
FERC VRF G2 Discussion	Guideline 2- Consistency within a Reliability Standard: This requirement has a single reliability activity associated with the reliability objective and no sub-Requirement(s) which allows a single VRF to be assigned; therefore no conflict(s) exist.

VRF and VSL Justifications – PRC-004-3, R3	
FERC VRF G3 Discussion	Guideline 3- Consistency among Reliability Standards: This requirement replaces one of the three performance components of PRC-004-2a, R1 (TO & DP) and R2 (GO). The three performance components (paraphrased) are "analyze Protection System Misoperations," "develop a Correction Action Plan," and "implement a Corrective Action Plan" which both have a VRF of High. This Requirement R3, to "review" (similar to "analyze"), comports with Reliability Standards PRC-016-0.1 – Special Protection System Misoperations, R1 ("…shall analyze its SPS operations and maintain a record of all misoperations…") and PRC-022-1 – Under-Voltage Load Shedding Program Performance, R1 ("…shall analyze and document all UVLS operations and Misoperations.") which both have a VRF of Medium. A VRF of Medium does not inadvertently lower the current VRF of High in the former PRC-004-2.1a, Requirements R1 and R2, because this Requirement now provides a clear and concise single reliability activity whereas the former Requirement contained multiple activities and is ambiguous.
FERC VRF G4 Discussion	Guideline 4- Consistency with NERC Definitions of VRFs: Failure of another Composite Protection System owner to review its component(s) for Misoperation, upon notification, for each BES interrupting device operation caused by a Protection System operation or by manual intervention in response to a Protection System failure to operate could in the planning time frame, under emergency, abnormal, or restorative conditions anticipated by the preparations, directly and adversely affect the electrical state or capability of the bulk electric system, or the ability to effectively monitor, control, or restore the bulk electric system. Composite Protection System operations reviewed for proper operation by the other owner(s) is an important step in preventing the future severity of disturbances affecting a wider area, or potential equipment damage.

VRF and VSL Justifications – PRC-004-3, R3			
FERC VRF G5 Discussion	Guideline 5- Treatment of Requirements that Co-mingle More than One Obligation: This requirement does not co-mingle reliability objectives of differing risk; therefore, the assigned VRF of Medium is consistent.		
Proposed VSL			
Lower	**Moderate**	**High**	**Severe**
The responsible entity identified whether or not its Protection System component(s) caused a Misoperation in accordance with Requirement R3, but was less than or equal to 30 calendar days late.	The responsible entity identified whether or not its Protection System component(s) caused a Misoperation in accordance with Requirement R3, but was greater than 30 calendar days and less than or equal to 45 calendar days late.	The responsible entity identified whether or not its Protection System component(s) caused a Misoperation in accordance with Requirement R3, but was greater than 45 calendar days and less than or equal to 60 calendar days late.	The responsible entity identified whether or not its Protection System component(s) caused a Misoperation in accordance with Requirement R3, but was greater than 60 calendar days late. OR The responsible entity failed to identify whether or not a Misoperation of its Protection System component(s) occurred in accordance with Requirement R3.
NERC VSL Guidelines	Meets NERC's VSL Guidelines—There is an incremental aspect to the VSL for tardiness and a binary aspect for failure. The VSL is entity size-neutral because performance is event-driven and not by individual assets.		

VRF and VSL Justifications – PRC-004-3, R3	
FERC VSL G1 Violation Severity Level Assignments Should Not Have the Unintended Consequence of Lowering the Current Level of Compliance	This requirement replaces one of the three performance components of PRC-004-2a, R1 (DP) and R2 (GO & TO) for the notified Protection System owner. The three performance components (paraphrased) are "analyze Protection System Misoperations," "develop a Correction Action Plan," and "implement a Corrective Action Plan." The VSLs are based on the three components and not individually as presented in the proposed PRC-004-3 standard. A VSL does not lower the current level of compliance because the former VSL was comingled with the other activities. This VSLs appropriately assess the severity of the violation with the failure to perform investigative actions as Severe.
FERC VSL G2 Violation Severity Level Assignments Should Ensure Uniformity and Consistency in the Determination of Penalties Guideline 2a: The Single Violation Severity Level Assignment Category for "Binary" Requirements Is Not Consistent Guideline 2b: Violation Severity Level Assignments that Contain Ambiguous Language	Guideline 2a: This requirement is not binary; therefore, this criterion does not apply. Guideline 2b: This VSL does not use any ambiguous terminology, thereby supporting uniformity and consistency in the determination of similar penalties for similar violations.

VRF and VSL Justifications – PRC-004-3, R3	
FERC VSL G3 Violation Severity Level Assignment Should Be Consistent with the Corresponding Requirement	This VSL uses similar terminology to that used in the associated requirement, and is therefore consistent with this Requirement.
FERC VSL G4 Violation Severity Level Assignment Should Be Based on A Single Violation, Not on A Cumulative Number of Violations	The VSL is based on a single violation and not cumulative violations.

VRF and VSL Justifications – PRC-004-3, R4	
Proposed VRF	**Medium**
NERC VRF Discussion	A Violation Risk Factor of Medium is consistent with the NERC VRF Guidelines. Failure to identify the cause(s) of a Misoperation (if not determined in Requirements R1 or R3) could in the planning time frame, under emergency, abnormal, or restorative conditions anticipated by the preparations, directly and adversely affect the electrical state or capability of the bulk electric system, or the ability to effectively monitor, control, or restore the bulk electric system.

VRF and VSL Justifications – PRC-004-3, R4	
	An Unidentified cause(s) of a Misoperation could contribute to the severity of future disturbances affecting a wider area, or potential equipment damage.
FERC VRF G1 Discussion	Guideline 1- Consistency w/ Blackout Report: This requirement is consistent with Recommendation 8: Improve System Protection to Slow or Limit the Spread of Future Cascading Outages. The applicable entity must conduct investigative action(s) to determine the cause(s) of a Misoperation, if not determined during the course of a review as proposed in Requirements R1 and R3.
FERC VRF G2 Discussion	Guideline 2- Consistency within a Reliability Standard: This requirement has a single reliability activity associated with the reliability objective and no sub-Requirement(s) which allows a single VRF to be assigned; therefore no conflict(s) exist.
FERC VRF G3 Discussion	Guideline 3- Consistency among Reliability Standards: This requirement replaces one of the three performance components of PRC-004-2a, R1 (TO & DP) and R2 (GO), which have a VRF of High. The three performance components (paraphrased) are “analyze Protection System Misoperations,” “develop a Correction Action Plan,” and “implement a Corrective Action Plan.” This Requirement R4, to perform at least one “investigative action” (similar to “analyze”), comports with Reliability Standards PRC-016-0.1 – Special Protection System Misoperations, R1 (“…shall analyze its SPS operations and maintain a record of all misoperations…”) and PRC-022-1 – Under-Voltage Load Shedding Program Performance, R1 (“…shall analyze and document all UVLS operations and Misoperations.”) which both have a VRF of Medium.

VRF and VSL Justifications – PRC-004-3, R4	
	A VRF of Medium is not inadvertently lowering the current VRF of High in the former PRC-004-2.1a, Requirements R1 or R3, because this Requirement now provides a clear and concise single reliability activity whereas the former Requirement contained multiple activities and is ambiguous. This VRF of Medium comports with the VRF assignment of Medium for PRC-004-3, Requirements R1 and R3, which will generally reveal the cause(s) of an identified Misoperation.
FERC VRF G4 Discussion	Guideline 4- Consistency with NERC Definitions of VRFs: Failure to identify the cause(s) of a Misoperation could in the planning time frame, under emergency, abnormal, or restorative conditions anticipated by the preparations, directly and adversely affect the electrical state or capability of the bulk electric system, or the ability to effectively monitor, control, or restore the bulk electric system. Unidentified causes of a Misoperation could contribute to the severity of future disturbances affecting a wider area, or potential equipment damage.
FERC VRF G5 Discussion	Guideline 5- Treatment of Requirements that Co-mingle More than One Obligation: This requirement does not co-mingle reliability objectives of differing risk; therefore, the assigned VRF of Medium is consistent.

VRF and VSL Justifications – PRC-004-3, R4			
Proposed VSL			
Lower	**Moderate**	**High**	**Severe**
The responsible entity performed at least one investigative action in accordance with Requirement R4, but was less than or equal to one calendar quarter late.	The responsible entity performed at least one investigative action in accordance with Requirement R4, but was greater than one calendar quarter and less than or equal to two calendar quarters late.	The responsible entity performed at least one investigative action in accordance with Requirement R4, but was greater than two calendar quarters and less than or equal to three calendar quarters late.	The responsible entity performed at least one investigative action in accordance with Requirement R4, but was more than three calendar quarters late. OR The responsible entity failed to perform investigative action(s) in accordance with Requirement R4.
NERC VSL Guidelines	Meets NERC's VSL Guidelines—There is an incremental aspect to the VSL for tardiness and a binary aspect for failure. The VSL is entity size-neutral because performance is event-driven and not by individual assets.		
FERC VSL G1 Violation Severity Level Assignments Should Not Have the Unintended Consequence of Lowering the Current Level of Compliance	This requirement replaces one of the three performance components of PRC-004-2a, R1 (TO & DP) and R2 (GO). The three performance components (paraphrased) are "analyze Protection System Misoperations," "develop a Correction Action Plan," and "implement a Corrective Action Plan." The VSLs are based on the three components and not individually as presented in the proposed PRC-004-3 standard.		

VRF and VSL Justifications – PRC-004-3, R4	
	This VSL does not lower the current level of compliance because the former VSL was comingled with the other activities. This VSLs appropriately assess the severity of the violation with the failure to perform investigative actions as Severe.
FERC VSL G2 Violation Severity Level Assignments Should Ensure Uniformity and Consistency in the Determination of Penalties Guideline 2a: The Single Violation Severity Level Assignment Category for "Binary" Requirements Is Not Consistent Guideline 2b: Violation Severity Level Assignments that Contain Ambiguous Language	Guideline 2a: This requirement is not binary; therefore, this criterion does not apply. Guideline 2b: This VSL does not use any ambiguous terminology, thereby supporting uniformity and consistency in the determination of similar penalties for similar violations.
FERC VSL G3 Violation Severity Level Assignment Should Be Consistent with the Corresponding Requirement	This VSL uses similar terminology to that used in the associated requirement, and is therefore consistent with this Requirement.

VRF and VSL Justifications – PRC-004-3, R4	
FERC VSL G4 Violation Severity Level Assignment Should Be Based on A Single Violation, Not on A Cumulative Number of Violations	The VSL is based on a single violation and not cumulative violations.

VRF and VSL Justifications – PRC-004-3, R5	
Proposed VRF	**Medium**
NERC VRF Discussion	A Violation Risk Factor of Medium is consistent with the NERC VRF Guidelines. Failure to develop a CAP for a Misoperation with an identified cause could in the planning time frame, under emergency, abnormal, or restorative conditions anticipated by the preparations, directly and adversely affect the electrical state or capability of the bulk electric system, or the ability to effectively monitor, control, or restore the bulk electric system. An unresolved cause of a Misoperation or failing to consider other locations with similar Protection System components could affect the electrical state or capability of the bulk electric system, or the ability to effectively monitor, control, or restore the bulk electric system.

VRF and VSL Justifications – PRC-004-3, R5	
FERC VRF G1 Discussion	Guideline 1- Consistency w/ Blackout Report: The blackout report and subsequent technical analysis resulted in entities performing corrective actions; however, there were no negative reliability outcomes concerning the development of a Corrective Action Plan (CAP) associated with Protection Systems.
FERC VRF G2 Discussion	Guideline 2- Consistency within a Reliability Standard: This requirement has a single reliability activity associated with the reliability objective and no sub-Requirement(s) which allows a single VRF to be assigned; therefore no conflict(s) exist.
FERC VRF G3 Discussion	Guideline 3- Consistency among Reliability Standards: This requirement replaces one of the three performance components of PRC-004-2a, R1 (TO & DP) and R2 (GO). The three performance components (paraphrased) are "analyze Protection System Misoperations," "develop a Correction Action Plan," and "implement a Corrective Action Plan" which have a VRF of High. This requirement is consistent with Reliability Standards PRC-016-0.1, R2 ("…shall take corrective actions to avoid future Misoperations"), PRC-022-1, R1.5 ("For any Misoperation, a Corrective Action Plan…"), FAC-003, R5 ("…Transmission Owner or applicable Generator Owner shall take corrective action to ensure continued vegetation management") all three of which have a VRF of Medium.
FERC VRF G4 Discussion	Guideline 4- Consistency with NERC Definitions of VRFs: Failure to develop a CAP for a Misoperation with an identified cause or failing to consider other locations with similar components could in the planning time frame, under emergency, abnormal, or restorative conditions anticipated by the preparations, directly and adversely affect the electrical state or capability of the bulk electric system, or the ability to effectively monitor, control, or restore the bulk electric system.

VRF and VSL Justifications – PRC-004-3, R5			
	An unresolved cause of a Misoperation could affect the electrical state or capability of the bulk electric system, or the ability to effectively monitor, control, or restore the bulk electric system if the same condition resulted in a future Misoperation.		
FERC VRF G5 Discussion	Guideline 5- Treatment of Requirements that Co-mingle More than One Obligation: This requirement does not co-mingle reliability objectives of differing risk; therefore, the assigned VRF of Medium is consistent.		
Proposed VSL			
Lower	**Moderate**	**High**	**Severe**
The responsible entity developed a CAP, or explained in a declaration in accordance with Requirement R5, but in more than 60 calendar days and less than or equal to 70 calendar days of first identifying a cause of the Misoperation. OR	The responsible entity developed a CAP, or explained in a declaration in accordance with Requirement R5, but in more than 70 calendar days and less than or equal to 80 calendar days of first identifying a cause of the Misoperation. OR	The responsible entity developed a CAP, or explained in a declaration in accordance with Requirement R5, but in more than 80 calendar days and less than or equal to 90 calendar days of first identifying a cause of the Misoperation. OR	The responsible entity developed a CAP, or explained in a declaration in accordance with Requirement R5, but in more than 90 calendar days of first identifying a cause of the Misoperation. OR The responsible entity failed to develop a CAP or explain in a declaration in accordance with Requirement R5. OR

VRF and VSL Justifications – PRC-004-3, R5			
The responsible entity developed an evaluation in accordance with Requirement R5, but in more than 60 calendar days and less than or equal to 70 calendar days of first identifying a cause of the Misoperation.	The responsible entity developed an evaluation in accordance with Requirement R5, but in more than 70 calendar days and less than or equal to 80 calendar days of first identifying a cause of the Misoperation.	The responsible entity developed an evaluation in accordance with Requirement R5, but in more than 80 calendar days and less than or equal to 90 calendar days of first identifying a cause of the Misoperation.	The responsible entity developed an evaluation in accordance with Requirement R5, but in more than 90 calendar days of first identifying a cause of the Misoperation. OR The responsible entity failed to develop an evaluation in accordance with Requirement R5.
NERC VSL Guidelines	Meets NERC's VSL Guidelines—There is an incremental aspect to the VSL for tardiness and a binary aspect for failure. Varying VSLs are provided for the omission of the evaluation when developing the Corrective Action Plan and for failure to develop the evaluation.		
FERC VSL G1 Violation Severity Level Assignments Should Not Have the Unintended Consequence of Lowering the Current Level of Compliance	This requirement replaces one of the three performance components of PRC-004-2a, R1 (TO & DP) and R2 (GO). The three performance components (paraphrased) are "analyze Protection System Misoperations," "develop a Correction Action Plan," and "implement a Corrective Action Plan" which have varying VSLs. This VSL does not lower the current level of compliance because the former VSL in PRC-004-2.1a was comingled with the other activities. This Requirement has a Severe VSL for failure to develop the CAP with the other VSLs being based on tardiness of the development.		

VRF and VSL Justifications – PRC-004-3, R5	
FERC VSL G2 Violation Severity Level Assignments Should Ensure Uniformity and Consistency in the Determination of Penalties Guideline 2a: The Single Violation Severity Level Assignment Category for "Binary" Requirements Is Not Consistent Guideline 2b: Violation Severity Level Assignments that Contain Ambiguous Language	Guideline 2a: This requirement is not binary; therefore, this criterion does not apply. Guideline 2b: This VSL does not use any ambiguous terminology, thereby supporting uniformity and consistency in the determination of similar penalties for similar violations.
FERC VSL G3 Violation Severity Level Assignment Should Be Consistent with the Corresponding Requirement	This VSL uses similar terminology to that used in the associated requirement, and is therefore consistent with this Requirement.
FERC VSL G4	The VSL is based on a single violation and not cumulative violations.

VRF and VSL Justifications – PRC-004-3, R5	
Violation Severity Level Assignment Should Be Based on A Single Violation, Not on A Cumulative Number of Violations	

VRF and VSL Justification – PRC-004-3, R6	
Proposed VRF	**Medium**
NERC VRF Discussion	A Violation Risk Factor of Medium is consistent with the NERC VRF Guidelines. Failure to implement a CAP for a Misoperation with an identified cause could in the planning time frame, under emergency, abnormal, or restorative conditions anticipated by the preparations, directly and adversely affect the electrical state or capability of the bulk electric system, or the ability to effectively monitor, control, or restore the bulk electric system. An uncorrected cause of a Misoperation as a result of not implementing a Corrective Action Plan, could affect the electrical state or capability of the bulk electric system, or the ability to effectively monitor, control, or restore the bulk electric system since the condition could occur again.

VRF and VSL Justification – PRC-004-3, R6	
FERC VRF G1 Discussion	Guideline 1- Consistency w/ Blackout Report: The blackout report and subsequent technical analysis resulted in entities performing corrective actions; however, there were no negative reliability outcomes concerning the implementation of a Corrective Action Plan (CAP) associated with Protection Systems.
FERC VRF G2 Discussion	Guideline 2- Consistency within a Reliability Standard: This requirement has a single reliability activity associated with the reliability objective and no sub-Requirement(s) which allows a single VRF to be assigned; therefore no conflict(s) exist.
FERC VRF G3 Discussion	Guideline 3- Consistency among Reliability Standards: This requirement replaces one of the three performance components of PRC-004-2.1a, R1 (TO & DP) and R2 (GO),which both have a VRF of High. The three performance components (paraphrased) are "analyze Protection System Misoperations," "develop a Correction Action Plan," and "implement a Corrective Action Plan". This requirement is consistent with Reliability Standards PRC-016-0.1, R2 ("…shall take corrective actions to avoid future misoperations.") and PRC-022-1, R1.5 ("For any Misoperation, a Corrective Action Plan…") which both have a VRF of Medium. The proposed VRF of Medium does not inadvertently lower the current VRF of High in the former PRC-004-2.1a, Requirements R1 and R2, because this Requirement now provides a clear and concise single reliability activity whereas the former Requirement contained multiple activities and is ambiguous.

VRF and VSL Justification – PRC-004-3, R6	
FERC VRF G4 Discussion	Guideline 4- Consistency with NERC Definitions of VRFs: Failure to implement a Corrective Action Plan for a Misoperation with an identified cause could in the planning time frame, under emergency, abnormal, or restorative conditions anticipated by the preparations, directly and adversely affect the electrical state or capability of the bulk electric system, or the ability to effectively monitor, control, or restore the bulk electric system. An uncorrected cause of a Misoperation could contribute to the severity of future disturbances affecting a wider area, or potential equipment damage.
FERC VRF G5 Discussion	Guideline 5- Treatment of Requirements that Co-mingle More than One Obligation: This requirement does not co-mingle reliability objectives of differing risk; therefore, the assigned VRF of Medium is consistent.

Proposed VSL			
Lower	**Moderate**	**High**	**Severe**
The responsible entity implemented, but failed to update a CAP, when actions or timetables changed, in accordance with Requirement R6.	N/A	N/A	The responsible entity failed to implement a CAP in accordance with Requirement R6.

VRF and VSL Justification – PRC-004-3, R6	
NERC VSL Guidelines	Meets NERC's VSL Guidelines—The VSLs cover aspects of this Requirement that are not equal in importance and performance.
FERC VSL G1 Violation Severity Level Assignments Should Not Have the Unintended Consequence of Lowering the Current Level of Compliance	Guideline 3- Consistency among Reliability Standards: This requirement replaces one of the three performance components of PRC-004-2a, R1 (TO & DP) and R2 (GO). The three performance components (paraphrased) are "analyze Protection System Misoperations," "develop a Correction Action Plan," and "implement a Corrective Action Plan." The VSLs are based on the three components and not individually as presented in the proposed PRC-004-3 standard. The proposed VSL does not lower the current level of compliance because the former VSL was comingled with the other activities. The proposed Requirement is a Severe VSL for failure to implement the CAP with the Lower VSL being based on the failure of updating the CAP when actions or timetables change which is administrative in nature.
FERC VSL G2 Violation Severity Level Assignments Should Ensure Uniformity and Consistency in the Determination of Penalties	Guideline 2a: This requirement is not binary; therefore, this criterion does not apply. Guideline 2b: The proposed VSL does not use any ambiguous terminology, thereby supporting uniformity and consistency in the determination of similar penalties for similar violations.

VRF and VSL Justification – PRC-004-3, R6	
Guideline 2a: The Single Violation Severity Level Assignment Category for "Binary" Requirements Is Not Consistent Guideline 2b: Violation Severity Level Assignments that Contain Ambiguous Language	
FERC VSL G3 Violation Severity Level Assignment Should Be Consistent with the Corresponding Requirement	The proposed VSL uses similar terminology to that used in the associated requirement, and is therefore consistent with this Requirement.
FERC VSL G4 Violation Severity Level Assignment Should Be Based on A Single Violation, Not on A Cumulative Number of Violations	The VSL is based on a single violation and not cumulative violations.

Exhibit E-2
Analysis of Violation Risk Factors and Violation Severity Levels for Proposed Reliability Standard PRC-010-1

NERC
NORTH AMERICAN ELECTRIC RELIABILITY CORPORATION

Project 2008-02 Undervoltage Load Shedding (PRC-010-1)

VRF and VSL Justifications

This document provides the Undervoltage Load Shedding Standard Drafting Team's (drafting team's) justification for assignment of violation risk factors (VRFs) and violation severity levels (VSLs) for each requirement in PRC-010-1 – Undervoltage Load Shedding.

Each primary requirement is assigned a VRF and a set of one or more VSLs. These elements support the determination of an initial value range for the Base Penalty Amount regarding violations of requirements in FERC-approved Reliability Standards, as defined in the ERO Sanction Guidelines.

The drafting team applied the following NERC criteria and FERC Guidelines when proposing VRFs and VSLs for the requirements under this project:

NERC Criteria - Violation Risk Factors

High Risk Requirement

A requirement that, if violated, could directly cause or contribute to Bulk Electric System instability, separation, or a Cascading sequence of failures, or could place the Bulk Electric System at an unacceptable risk of instability, separation, or Cascading failures; or, a requirement in a planning time frame that, if violated, could, under Emergency, abnormal, or restorative conditions anticipated by the preparations, directly cause or contribute to Bulk Electric System instability, separation, or a Cascading sequence of failures, place the Bulk Electric System at an unacceptable risk of instability, separation, or Cascading failures, or hinder restoration to a normal condition.

Medium Risk Requirement

A requirement that, if violated, could directly affect the electrical state or the capability of the Bulk Electric System or the ability to effectively monitor and control the Bulk Electric System. However, violation of a medium risk requirement is unlikely to lead to Bulk Electric System instability, separation, or Cascading failures; or, a requirement in a planning time frame that, if violated, could, under Emergency, abnormal, or restorative conditions anticipated by the preparations, directly and adversely affect the electrical state or capability of the Bulk Electric System or the ability to effectively monitor, control, or restore the Bulk Electric System. However, violation of a medium risk requirement is unlikely, under Emergency, abnormal, or restoration conditions anticipated by the preparations, to lead to Bulk Electric System instability, separation, or Cascading failures nor to hinder restoration to a normal condition.

Lower Risk Requirement

A requirement that is administrative in nature and a requirement that, if violated, would not be expected to adversely affect the electrical state or capability of the Bulk Electric System or the ability to effectively monitor and control the Bulk Electric System; or, a requirement that is administrative in nature and a requirement in a planning time frame that, if violated, would not, under the Emergency, abnormal, or

restorative conditions anticipated by the preparations, be expected to adversely affect the electrical state or capability of the Bulk Electric System or the ability to effectively monitor, control, or restore the Bulk Electric System. A planning requirement that is administrative in nature.

FERC Violation Risk Factor Guidelines

Guideline (1) — Consistency with the Conclusions of the Final Blackout Report

The Commission seeks to ensure that Violation Risk Factors assigned to requirements of reliability standards in these identified areas appropriately reflect their historical critical impact on the reliability of the Bulk Power System.

In the VSL Order, FERC listed critical areas (from the Final Blackout Report) where violations could severely affect the reliability of the Bulk-Power System:

- Emergency operations
- Vegetation management
- Operator personnel training
- Protection systems and their coordination
- Operating tools and backup facilities
- Reactive power and voltage control
- System modeling and data exchange
- Communication protocol and facilities
- Requirements to determine equipment ratings
- Synchronized data recorders
- Clearer criteria for operationally critical facilities
- Appropriate use of transmission loading relief

Guideline (2) — Consistency within a Reliability Standard

The Commission expects a rational connection between the sub-Requirement Violation Risk Factor assignments and the main Requirement Violation Risk Factor assignment.

Guideline (3) — Consistency among Reliability Standards

The Commission expects the assignment of Violation Risk Factors corresponding to Requirements that address similar reliability goals in different Reliability Standards would be treated comparably.

Guideline (4) — Consistency with NERC's Definition of the Violation Risk Factor Level

Guideline (4) was developed to evaluate whether the assignment of a particular Violation Risk Factor level conforms to NERC's definition of that risk level.

Guideline (5) — Treatment of Requirements that Co-mingle More Than One Obligation

Where a single Requirement co-mingles a higher risk reliability objective and a lesser risk reliability objective, the VRF assignment for such requirements must not be watered down to reflect the lower risk level associated with the less important objective of the reliability standard.

The following discussion addresses how the drafting team considered FERC's VRF Guidelines 2 through 5. The team did not address Guideline 1 directly because of an apparent conflict between Guidelines 1 and 4. Whereas Guideline 1 identifies a list of topics that encompass nearly all topics within NERC's Reliability Standards and implies that these requirements should be assigned a "High" VRF, Guideline 4 directs assignment of VRFs based on the impact of a specific requirement to the reliability of the system. The drafting team believes that Guideline 4 is reflective of the intent of VRFs in the first instance and, therefore, concentrated its approach on the reliability impact of the requirements.

PRC-010-1 – Undervoltage Load Shedding is a standard revision with the stated purpose: *To establish an integrated and coordinated approach to the design, evaluation, and reliable operation of Undervoltage Load Shedding Programs.* FERC Order No. 693 requested that PRC-010-0 be modified to require that an integrated and coordinated approach be included in all protection systems on the Bulk-Power System, including generators and transmission lines, generators' low voltage ride-through capabilities, and underfrequency loading shedding (UFLS) and undervoltage load shedding (UVLS) programs. PRC-010-1 addresses this directive in addition to consolidating and revising PRC-010-0 – Assessment of the Design and Effectiveness of UVLS Program with three (3) other existing UVLS standards: PRC-020-1 – Under-Voltage Load Shedding Program Database, PRC-021-1 – Under-Voltage Load Shedding Program Data, and PRC-022-1 – Under-Voltage Load Shedding Program Performance.

PRC-010-1 has eight (8) requirements that incorporate and enhance the intent of the requirements of PRC-010-0, PRC-020-1, PRC-021-1, and PRC-022-1. The revised standard requires that entities developing an Undervoltage Load Shedding Program (UVLS Program) evaluate the program's effectiveness prior to providing the program specifications and schedule to applicable entities. Applicable entities are then required to adhere to the UVLS Program specifications and implementation schedule, including those specifications and schedules associated with Corrective Action Plans (CAPs) for existing programs. The standard also requires an assessment of a UVLS Program at least once every 60 months, and an assessment to evaluate program performance within 12 months of an applicable event. If program deficiencies are identified as a result of either of these assessments, entities are required to develop and provide a CAP to applicable entities within three (3) months. In addition, there are requirements to update, provide data for, and share a UVLS Program database containing information necessary to model the program for use in event analyses and assessments.

The requirements of PRC-010-1 do not map, one-to-one, with the requirements of the legacy standards. The new requirements comingle various reliability attributes of the legacy standards with new reliability objectives, thus a requirement-to-requirement comparison of VRFs is not always possible. In developing the new VRFs for the requirements of PRC-010-1, the drafting team carefully considered the NERC criteria for developing VRFs, as well as the FERC VRF guidelines. The VRFs of FERC-approved PRC-006-1 – Automatic Underfrequency Load Shedding influenced the drafting team's VRF decisions (citing FERC VRF Guideline 3), as the drafting team used PRC-006-1 as a model with respect to PRC-010-1's language and construct.

NERC Criteria - Violation Severity Levels

VSLs define the degree to which compliance with a requirement was not achieved. Each requirement must have at least one VSL. While it is preferable to have four VSLs for each requirement, some requirements do not have multiple "degrees" of noncompliant performance, and may have only one, two, or three VSLs.

VSLs should be based on the guidelines shown in the table below:

Lower	Moderate	High	Severe
Missing a minor element (or a small percentage) of the required performance. The performance or product measured has significant value as it almost meets the full intent of the requirement.	Missing at least one significant element (or moderate percentage) of the required performance. The performance or product measured still has significant value in meeting the intent of the requirement.	Missing more than one significant element (or missing a high percentage) of the required performance or is missing a single vital component. The performance or product has limited value in meeting the intent of the requirement.	Missing most or all of the significant elements (or a significant percentage) of the required performance. The performance measured does not meet the intent of the requirement or the product delivered cannot be used in meeting the intent of the requirement.

FERC Order on Violation Severity Levels

In its June 19, 2008 Order on Violation Severity Levels, FERC indicated it would use the following four guidelines for determining whether to approve VSLs:

Guideline 1: Violation Severity Level Assignments Should Not Have the Unintended Consequence of Lowering the Current Level of Compliance

Compare the VSLs to any prior Levels of Non-compliance and avoid significant changes that may encourage a lower level of compliance than was required when Levels of Non-compliance were used.

Guideline 2: Violation Severity Level Assignments Should Ensure Uniformity and Consistency in the Determination of Penalties

Guideline 2a: A violation of a “binary” type requirement must be a “Severe” VSL.

Guideline 2b: Do not use ambiguous terms such as “minor” and “significant” to describe noncompliant performance.

Guideline 3: Violation Severity Level Assignment Should Be Consistent with the Corresponding Requirement

VSLs should not expand on what is required in the requirement.

Guideline 4: Violation Severity Level Assignment Should Be Based on a Single Violation, Not on a Cumulative Number of Violations

. . . unless otherwise stated in the requirement, each instance of non-compliance with a requirement is a separate violation. Section 4 of the Sanction Guidelines states that assessing penalties on a per violation per day basis is the “default” for penalty calculations.

VRF and VSL Justifications – PRC-010-1 Requirement R1	
Proposed VRF	High
NERC VRF Discussion	PRC-010-1 Requirement R1 meets the NERC criterion for a High VRF. Failure to evaluate a UVLS Program to show that it resolves the undervoltage issue it was designed for, and that it is coordinated with generator voltage ride-through capabilities and other protection and control systems, could lead to implementation of an ineffective or counterproductive program. In addition, failure to subsequently provide the UVLS Program specifications and implementation schedule to applicable entities would negate proper program implementation. Both these implications could, under anticipated Emergency, abnormal, or restorative conditions, directly contribute to Bulk Electric System (BES) instability, separation, or Cascading failures.
FERC VRF G1 Discussion	**Guideline 1: Consistency w/ Blackout Report** N/A
FERC VRF G2 Discussion	**Guideline 2: Consistency within a Reliability Standard** PRC-010-1 Requirement R1 has parts that all support the reliability objective so only one VRF was assigned; therefore no conflict(s) exist.
FERC VRF G3 Discussion	**Guideline 3: Consistency among Reliability Standards** PRC-010-1 Requirement R1 is similar to EOP-003-2, Requirements R3, R4, and R7, which have approved VRFs of High.
FERC VRF G4 Discussion	**Guideline 4: Consistency with NERC Definitions of VRFs** PRC-010-1 Requirement R1 meets the NERC criterion for a High VRF. Failure to evaluate a UVLS Program to show that it resolves the undervoltage issue it was designed for, and that it is coordinated with generator voltage ride-through capabilities and other protection and control systems, could lead to implementation of an ineffective or counterproductive program. In addition, failure to subsequently provide the UVLS Program specifications and implementation schedule to applicable entities would negate proper program implementation. Both these implications could, under anticipated Emergency, abnormal, or restorative conditions, directly contribute to BES instability, separation, or Cascading failures.
FERC VRF G5 Discussion	**Guideline 5: Treatment of Requirements that Co-mingle More than One Obligation** The obligations in PRC-010-1 Requirement R1, which are to evaluate the effectiveness of a UVLS Program according to the criteria specified in the two parts and subsequently provide the program specifications and implementation schedule to applicable entities, are all equally critical elements that failure to meet could, under anticipated Emergency, abnormal, or restorative conditions, directly contribute to BES instability, separation, or

VRF and VSL Justifications – PRC-010-1 Requirement R1	
	Cascading failures. Therefore, the assigned VRF of High is consistent throughout the requirement.
Proposed Lower VSL	N/A
Proposed Moderate VSL	N/A
Proposed High VSL	N/A
Proposed Severe VSL	The applicable entity that developed the UVLS Program failed to evaluate the program's effectiveness and subsequently provide the UVLS Program's specifications and implementation schedule to UVLS entities in accordance with Requirement R1, including the items specified in parts 1.1 and 1.2.
NERC VSL Guidelines Discussion	The proposed VSL for PRC-010-1 Requirement R1 meets NERC's VSL Guidelines in that there is a binary aspect for failure; the VSL addresses the degrees of compliance with respect to equal importance of the two parts.
FERC VSL G1 Discussion	**Guideline 1: Violation Severity Level Assignments Should Not Have the Unintended Consequence of Lowering the Current Level of Compliance** The basis for the current level of compliance in relation to PRC-010-1 Requirement R1 is EOP-003-2 Requirements R3, R4, and R7, as these requirements are being retired because they map to PRC-010-1 Requirement R1. Since the VSL for PRC-010-1 Requirement R1 is binary, the current level of compliance is met or exceeded when compared to the VSLs for EOP-003-2 Requirements R3, R4, and R7.
FERC VSL G2 Discussion	**Guideline 2: Violation Severity Level Assignments Should Ensure Uniformity and Consistency in the Determination of Penalties** **Guideline 2a: The Single Violation Severity Level Assignment Category for "Binary" Requirements Is Not Consistent** The proposed VSL for PRC-010-1 Requirement R1 is binary and is consistent with the guideline in that it is classified as a severe VSL. **Guideline 2b: Violation Severity Level Assignments that Contain Ambiguous Language** The proposed VSL for PRC-010-1 Requirement R1 uses the term "effectiveness" from the associated requirement, which could be considered ambiguous terminology; however, Requirement R1 does qualify the term "effectiveness" by indicating that the applicable entity must include what is listed in the requirement's parts in its evaluation of effectiveness. The VSL subsequently notes that the items specified in the parts must be included. This thereby supports uniformity and consistency in the determination of similar penalties for similar violations.

VRF and VSL Justifications – PRC-010-1 Requirement R1	
FERC VSL G3	**Guideline 3: Violation Severity Level Assignment Should Be Consistent with the Corresponding Requirement** The proposed VSL for PRC-010-1 Requirement R1 uses similar terminology to that used in the requirement and is therefore consistent with the requirement.
FERC VSL G4	**Guideline 4: Violation Severity Level Assignment Should Be Based on A Single Violation, Not on A Cumulative Number of Violations** The proposed VSL for PRC-010-1 Requirement R1 is based on a single violation and not cumulative violations.

VRF and VSL Justifications – PRC-010-1 Requirement R2	
Proposed VRF	High
NERC VRF Discussion	PRC-010-1 Requirement R2 meets the NERC criterion for a High VRF. Failure to implement a UVLS Program by adhering to the program specifications and implementation schedule increases the risk that the program will not perform properly. Under anticipated Emergency, abnormal, or restorative conditions, this could directly contribute to BES instability, separation, or Cascading failures.
FERC VRF G1 Discussion	**Guideline 1: Consistency w/ Blackout Report** N/A
FERC VRF G2 Discussion	**Guideline 2: Consistency within a Reliability Standard** PRC-010-1 Requirement R2 has no parts so only one VRF was assigned.
FERC VRF G3 Discussion	**Guideline 3: Consistency among Reliability Standards** PRC-010-1 Requirement R2 is similar to PRC-006-1 Requirement R9 and EOP-003-2 Requirement R5, which have approved VRFs of High.
FERC VRF G4 Discussion	**Guideline 4: Consistency with NERC Definitions of VRFs** PRC-010-1 Requirement R2 meets the NERC criterion for a High VRF. Failure to implement a UVLS Program by adhering to the program specifications and implementation schedule increases the risk that the program will not perform properly. Under anticipated Emergency, abnormal, or restorative conditions, this could directly contribute to BES instability, separation, or Cascading failures.
FERC VRF G5 Discussion	**Guideline 5: Treatment of Requirements that Co-mingle More than One Obligation** The obligations required in PRC-010-1 Requirement R2 are to adhere to the UVLS Program specifications and implementation schedule associated with program development (per Requirement R1) and corrective action (per Requirement R5). The requirement to develop a CAP in Requirement R5 is assigned a Medium VRF; therefore, execution of the corrective actions required by Requirement R2 has a commensurate VRF of Medium. However, since the obligations related to the development of a UVLS Program in Requirement R1 are assigned a High VRF, the failure to implement the program per Requirement R2 could, under anticipated Emergency, abnormal, or restorative conditions, directly contribute to BES instability, separation, or Cascading failures. Therefore, Requirement R2 is assigned a High VRF to reflect the higher risk level associated with the more critical objective.
Proposed Lower VSL	N/A

VRF and VSL Justifications – PRC-010-1 Requirement R2	
Proposed Moderate VSL	N/A
Proposed High VSL	The applicable entity failed to adhere to the UVLS Program specifications in accordance with Requirement R2. OR The applicable entity failed to adhere to the implementation schedule in accordance with Requirement R2.
Proposed Severe VSL	The applicable entity failed to adhere to the UVLS Program specifications and implementation schedule in accordance with Requirement R2.
NERC VSL Guidelines Discussion	PRC-010-1 Requirement R2 meets NERC's VSL Guidelines in that the VSLs cover aspects of the requirement that are equal in importance.
FERC VSL G1 Discussion	**Guideline 1: Violation Severity Level Assignments Should Not Have the Unintended Consequence of Lowering the Current Level of Compliance** PRC-010-1 Requirement R2 is a new requirement; therefore, there is no prior level of compliance.
FERC VSL G2 Discussion	**Guideline 2: Violation Severity Level Assignments Should Ensure Uniformity and Consistency in the Determination of Penalties** **Guideline 2a: The Single Violation Severity Level Assignment Category for "Binary" Requirements Is Not Consistent** N/A **Guideline 2b: Violation Severity Level Assignments that Contain Ambiguous Language** The proposed VSLs for PRC-010-1 Requirement R2 do not use any ambiguous terminology, thereby supporting uniformity and consistency in the determination of similar penalties for similar violations.
FERC VSL G3	**Guideline 3: Violation Severity Level Assignment Should Be Consistent with the Corresponding Requirement** The proposed VSLs for PRC-010-1 Requirement R2 use similar terminology to that used in the requirement and are therefore consistent with the requirement.
FERC VSL G4	**Guideline 4: Violation Severity Level Assignment Should Be Based on A Single Violation, Not on A Cumulative Number of Violations** The proposed VSLs for PRC-010-1 Requirement R2 are based on a single violation and not cumulative violations.

VRF and VSL Justifications – PRC-010-1 Requirement R3	
Proposed VRF	Medium
NERC VRF Discussion	PRC-010-1 Requirement R3 meets NERC's criterion for a Medium VRF. Failure to perform a comprehensive assessment to evaluate the effectiveness of a UVLS Program at least once every 60 calendar months could lead to failure to identify and address a necessary program modification, which could, under anticipated Emergency, abnormal, or restorative conditions, directly and adversely affect the electrical state or the capability of the BES, or the ability to effectively monitor and control the BES. However, while the performance that must be met when initially developing a UVLS Program is assigned a High VRF in Requirement R1 due to the likely implications of developing and subsequently implementing an ineffective or counterproductive program if the criteria is not met, it is less likely that failure to do a periodic comprehensive assessment of the program, which supplements the annual Transmission Planning (TPL) assessment required by NERC Reliability Standards, would have implications on the BES. Therefore, a violation of Requirement R3 is unlikely to lead to BES instability, separation, or Cascading failures. The applicable entities are always responsible for maintaining the reliability of the BES regardless of the situation.
FERC VRF G1 Discussion	**Guideline 1: Consistency w/ Blackout Report** N/A
FERC VRF G2 Discussion	**Guideline 2: Consistency within a Reliability Standard** PRC-010-1 Requirement R3 has parts that all support the reliability objective so only one VRF was assigned; therefore no conflict(s) exist.
FERC VRF G3 Discussion	**Guideline 3: Consistency among Reliability Standards** PRC-010-1 Requirement R3 is consistent with the current requirement it is replacing (PRC-010-0 Requirement R1), which has an approved VRF of Medium. Similar performance exists in PRC-006-1 Requirement R4, which has an approved VRF of High. This discrepancy is justified due to the differing nature of the programs these standards are addressing, as PRC-006-1 addresses mandatory UFLS programs and PRC-010-1 covers optional UVLS Programs. A UFLS program inherently has a more likely overall impact on the BES.
FERC VRF G4 Discussion	**Guideline 4: Consistency with NERC Definitions of VRFs** PRC-010-1 Requirement R3 meets NERC's criterion for a Medium VRF. Failure to perform a comprehensive assessment to evaluate the effectiveness of a UVLS Program at least once every 60 calendar months could lead to failure to identify and address a necessary program modification, which could, under anticipated Emergency, abnormal, or restorative conditions, directly and

VRF and VSL Justifications – PRC-010-1 Requirement R3	
	adversely affect the electrical state or the capability of the BES, or the ability to effectively monitor and control the BES. However, while the performance that must be met when initially developing a UVLS Program is assigned a High VRF in Requirement R1 due to the likely implications of developing and subsequently implementing an ineffective or counterproductive program if the criteria is not met, it is less likely that failure to do a periodic comprehensive assessment of the program, which supplements the annual TPL assessment required by NERC Reliability Standards, would have implications on the BES. Therefore, a violation of Requirement R3 is unlikely to lead to BES instability, separation, or Cascading failures. The applicable entities are always responsible for maintaining the reliability of the BES regardless of the situation.
FERC VRF G5 Discussion	**Guideline 5: Treatment of Requirements that Co-mingle More than One Obligation** The obligation required in PRC-010-1 Requirement R3 is to periodically evaluate the effectiveness of a UVLS Program according to the criteria specified in the two parts; the parts are equally critical elements that failure to meet could, under anticipated Emergency, abnormal, or restorative conditions, directly contribute to BES instability, separation, or Cascading failures. However, violation of these commensurate elements is unlikely to lead to BES instability, separation, or Cascading failures. Therefore, the assigned VRF of Medium is consistent throughout the requirement.
Proposed Lower VSL	N/A
Proposed Moderate VSL	N/A
Proposed High VSL	N/A
Proposed Severe VSL	The applicable entity failed to perform an assessment at least once during the 60 calendar months in accordance with Requirement R3, including the items specified in parts 3.1 and 3.2.
NERC VSL Guidelines Discussion	PRC-010-1 Requirement R3 meets NERC's VSL Guidelines in that there is a binary aspect for failure; the VSL addresses the degrees of compliance with respect to equal importance of the two parts.
FERC VSL G1 Discussion	**Guideline 1: Violation Severity Level Assignments Should Not Have the Unintended Consequence of Lowering the Current Level of Compliance** The proposed VSL for PRC-010-1 Requirement R3 is consistent in nature with the VSL for the requirement it is replacing (PRC-010-0 Requirement R1) and therefore does not lower the current level of compliance.

VRF and VSL Justifications – PRC-010-1 Requirement R3	
FERC VSL G2 Discussion	**Guideline 2: Violation Severity Level Assignments Should Ensure Uniformity and Consistency in the Determination of Penalties** **Guideline 2a: The Single Violation Severity Level Assignment Category for "Binary" Requirements Is Not Consistent** The proposed VSL for PRC-010-1 Requirement R3 for this binary requirement is consistent with the guideline in that it is classified as a severe VSL. **Guideline 2b: Violation Severity Level Assignments that Contain Ambiguous Language** The proposed VSL for PRC-010-1 Requirement R3 does not use any ambiguous terminology, thereby supporting uniformity and consistency in the determination of similar penalties for similar violations.
FERC VSL G3	**Guideline 3: Violation Severity Level Assignment Should Be Consistent with the Corresponding Requirement** The proposed VSL for PRC-010-1 Requirement R3 uses similar terminology to that used in the requirement and is therefore consistent with the requirement.
FERC VSL G4	**Guideline 4: Violation Severity Level Assignment Should Be Based on A Single Violation, Not on A Cumulative Number of Violations** The proposed VSL for PRC-010-1 Requirement R3 is based on a single violation and not cumulative violations.

VRF and VSL Justifications – PRC-010-1 Requirement R4	
Proposed VRF	Medium
NERC VRF Discussion	PRC-010-1 Requirement R4 meets NERC's criterion for a Medium VRF. Failure to perform an assessment to evaluate whether the UVLS Program resolved the undervoltage issues associated with a qualifying event in a timely manner could lead to failure to identify and address a necessary program modification. This could, under anticipated Emergency, abnormal, or restorative conditions, directly affect the electrical state or the capability of the BES, or the ability to effectively monitor and control the BES. However, while the performance that must be met when initially developing a UVLS Program is assigned a High VRF in Requirement R1 due to the likely implications of developing and subsequently implementing an ineffective or counterproductive program if the criteria is not met, it is less likely that failure to perform an assessment to evaluate whether the UVLS Program resolved the undervoltage issues associated with a qualifying event would have implications on the BES, as these are infrequent and would be done in addition to the annual TPL assessment required by NERC Reliability Standards. Therefore, a violation of Requirement R4 is unlikely to lead to BES instability, separation, or Cascading failures. The applicable entities are always responsible for maintaining the reliability of the BES regardless of the situation.
FERC VRF G1 Discussion	**Guideline 1: Consistency w/ Blackout Report** N/A
FERC VRF G2 Discussion	**Guideline 2: Consistency within a Reliability Standard** PRC-010-1 Requirement R4 has no parts so only one VRF was assigned.
FERC VRF G3 Discussion	**Guideline 3: Consistency among Reliability Standards** PRC-010-1 Requirement R4 is similar to PRC-022-1 Requirement 1 and PRC-006-1 Requirement R11, which have approved VRFs of Medium.
FERC VRF G4 Discussion	**Guideline 4: Consistency with NERC Definitions of VRFs** PRC-010-1 Requirement R4 meets NERC's criterion for a Medium VRF. Failure to perform an assessment to evaluate whether the UVLS Program resolved the undervoltage issues associated with a qualifying event in a timely manner could lead to failure to identify and address a necessary program modification. This could, under anticipated Emergency, abnormal, or restorative conditions, directly affect the electrical state or the capability of the BES, or the ability to effectively monitor and control the BES. However, while the performance that must be met when initially developing a UVLS Program is assigned a High VRF in Requirement R1 due to the likely implications of developing and subsequently implementing an ineffective or

VRF and VSL Justifications – PRC-010-1 Requirement R4	
	counterproductive program if the criteria is not met, it is less likely that failure to perform an assessment to evaluate whether the UVLS Program resolved the undervoltage issues associated with a qualifying event would have implications on the BES, as these are infrequent and would be done in addition to the annual TPL assessment required by NERC Reliability Standards. Therefore, a violation of Requirement R4 is unlikely to lead to BES instability, separation, or Cascading failures. The applicable entities are always responsible for maintaining the reliability of the BES regardless of the situation.
FERC VRF G5 Discussion	**Guideline 5: Treatment of Requirements that Co-mingle More than One Obligation** PRC-010-1 Requirement R4 does not co-mingle reliability objectives of differing risk; the assigned VRF of Medium is consistent throughout the requirement.
Proposed Lower VSL	The applicable entity performed an assessment in accordance with Requirement R4 within a time period greater than 12 calendar months but less than or equal to 13 calendar months after an applicable event.
Proposed Moderate VSL	The applicable entity performed an assessment in accordance with Requirement R4 within a time period greater than 13 calendar months but less than or equal to 14 calendar months after an applicable event.
Proposed High VSL	The applicable entity performed an assessment in accordance with Requirement R4 within a time period greater than 14 calendar months but less than or equal to 15 calendar months after an applicable event.
Proposed Severe VSL	The applicable entity performed an assessment in accordance with Requirement R4 within a time period greater than 15 months after an applicable event. OR The applicable entity failed to perform an assessment in accordance with Requirement R4.
NERC VSL Guidelines Discussion	PRC-010-1 Requirement R4 meets NERC's VSL Guidelines in that there is an incremental aspect to the VSLs for tardiness and a binary aspect for failure.
FERC VSL G1 Discussion	**Guideline 1: Violation Severity Level Assignments Should Not Have the Unintended Consequence of Lowering the Current Level of Compliance** PRC-010-1 Requirement R4 is different in construct from the requirement it is replacing (PRC-022-1 Requirement R1) and, therefore, the VSLs cannot be compared. However, both sets of VSLs have incremental aspects and a binary aspect for failure.

VRF and VSL Justifications – PRC-010-1 Requirement R4	
FERC VSL G2 Discussion	**Guideline 2: Violation Severity Level Assignments Should Ensure Uniformity and Consistency in the Determination of Penalties** **Guideline 2a: The Single Violation Severity Level Assignment Category for "Binary" Requirements Is Not Consistent** N/A **Guideline 2b: Violation Severity Level Assignments that Contain Ambiguous Language** The proposed VSLs for PRC-010-1 Requirement R4 do not use any ambiguous terminology, thereby supporting uniformity and consistency in the determination of similar penalties for similar violations.
FERC VSL G3	**Guideline 3: Violation Severity Level Assignment Should Be Consistent with the Corresponding Requirement** The proposed VSLs for PRC-010-1 Requirement R4 use similar terminology to that used in the requirement and are therefore consistent with the requirement.
FERC VSL G4	**Guideline 4: Violation Severity Level Assignment Should Be Based on A Single Violation, Not on A Cumulative Number of Violations** The proposed VSLs for PRC-010-1 Requirement R4 are based on a single violation and not cumulative violations.

VRF and VSL Justifications – PRC-010-1 Requirement R5	
Proposed VRF	Medium
NERC VRF Discussion	PRC-010-1 Requirement R5 meets NERC's criterion for a Medium VRF. Failure to develop and subsequently provide a CAP to address the deficiencies identified as a result of a UVLS Program assessment in a timely manner could lead to failure to address a necessary program modification, which could, under anticipated Emergency, abnormal, or restorative conditions, directly affect the electrical state or the capability of the BES, or the ability to effectively monitor and control the BES. However, since the development of a CAP in Requirement R5 is dependent on the outcomes of Requirement R3 or R4, the likelihood of implications on the BES is commensurate with those of Requirements R3 and R4, which are assigned Medium VRFs. Therefore, a violation of Requirement R5 is unlikely to lead to BES instability, separation, or Cascading failures. The applicable entities are always responsible for maintaining the reliability of the BES regardless of the situation.
FERC VRF G1 Discussion	**Guideline 1: Consistency w/ Blackout Report** N/A
FERC VRF G2 Discussion	**Guideline 2: Consistency within a Reliability Standard** PRC-010-1 Requirement R5 has no parts so only one VRF was assigned.
FERC VRF G3 Discussion	**Guideline 3: Consistency among Reliability Standards** PRC-010-1 Requirement R5 is similar to PRC-022-1 Requirement R1.5, which has an approved VRF of Medium.
FERC VRF G4 Discussion	**Guideline 4: Consistency with NERC Definitions of VRFs** PRC-010-1 Requirement R5 meets NERC's criterion for a Medium VRF. Failure to develop and subsequently provide a CAP to address the deficiencies identified as a result of a UVLS Program assessment in a timely manner could lead to failure to address a necessary program modification, which could, under anticipated Emergency, abnormal, or restorative conditions, directly affect the electrical state or the capability of the BES, or the ability to effectively monitor and control the BES. However, since the development of a CAP in Requirement R5 is dependent on the outcomes of Requirement R3 or R4, the likelihood of implications on the BES is commensurate with those of Requirements R3 and R4, which are assigned Medium VRFs. Therefore, a violation of Requirement R5 is unlikely to lead to BES instability, separation, or Cascading failures. The applicable entities are always responsible for maintaining the reliability of the BES regardless of the situation.

VRF and VSL Justifications – PRC-010-1 Requirement R5	
FERC VRF G5 Discussion	**Guideline 5: Treatment of Requirements that Co-mingle More than One Obligation** PRC-010-1 Requirement R5 does not co-mingle reliability objectives of differing risk; the assigned VRF of Medium is consistent throughout the requirement.
Proposed Lower VSL	The applicable entity developed a Corrective Action Plan and provided it to UVLS entities in accordance with Requirement R5 but was late by less than or equal to 15 calendar days.
Proposed Moderate VSL	The applicable entity developed a Corrective Action Plan and provided it to UVLS entities in accordance with Requirement R5 but was late by more than 15 calendar days but less than or equal to 30 calendar days.
Proposed High VSL	The applicable entity developed a Corrective Action Plan and provided it to UVLS entities in accordance with Requirement R5 but was late by more than 30 calendar days but less than or equal to 45 calendar days.
Proposed Severe VSL	The applicable entity developed a Corrective Action Plan and provided it to UVLS entities in accordance with Requirement R5 but was late by more than 45 calendar days. OR The responsible entity failed to develop a Corrective Action Plan or provide it to UVLS entities in accordance with Requirement R5.
NERC VSL Guidelines Discussion	PRC-010-1 Requirement R5 meets NERC's VSL Guidelines in that there is an incremental aspect to the VSLs for tardiness and a binary aspect for failure.
FERC VSL G1 Discussion	**Guideline 1: Violation Severity Level Assignments Should Not Have the Unintended Consequence of Lowering the Current Level of Compliance** PRC-010-1 Requirement R5 is different in construct from the requirement it is replacing (PRC-022-1 Requirement R1) and, therefore, the VSLs cannot be compared. However, both sets of VSLs have incremental aspects and a binary aspect for failure.
FERC VSL G2 Discussion	**Guideline 2: Violation Severity Level Assignments Should Ensure Uniformity and Consistency in the Determination of Penalties** **Guideline 2a: The Single Violation Severity Level Assignment Category for "Binary" Requirements Is Not Consistent** N/A **Guideline 2b: Violation Severity Level Assignments that Contain Ambiguous Language** The proposed VSLs for PRC-010-1 Requirement R5 do not use any ambiguous terminology, thereby supporting uniformity and consistency in the determination of similar penalties for similar violations.

VRF and VSL Justifications – PRC-010-1 Requirement R5	
FERC VSL G3	**Guideline 3: Violation Severity Level Assignment Should Be Consistent with the Corresponding Requirement** The proposed VSLs for PRC-010-1 Requirement R5 use similar terminology to that used in the requirement and are therefore consistent with the requirement.
FERC VSL G4	**Guideline 4: Violation Severity Level Assignment Should Be Based on A Single Violation, Not on A Cumulative Number of Violations** The proposed VSLs for PRC-010-1 Requirement R5 are based on a single violation and not cumulative violations.

VRF and VSL Justifications – PRC-010-1 Requirement R6	
Proposed VRF	Lower
NERC VRF Discussion	PRC-010-1 Requirement R6 meets NERC's criterion for a Lower VRF. Though having a current UVLS Program database is necessary to properly inform accurate undervoltage studies and event analyses, this is a planning requirement that is administrative in nature; failure to annually update a UVLS Program database would not, under the anticipated Emergency, abnormal, or restorative conditions, be expected to adversely affect the electrical state or capability of the BES, or the ability to effectively monitor, control, or restore the BES. The applicable entities are always responsible for maintaining the reliability of the BES regardless of the situation.
FERC VRF G1 Discussion	**Guideline 1: Consistency w/ Blackout Report** N/A
FERC VRF G2 Discussion	**Guideline 2: Consistency within a Reliability Standard** The requirement has no parts so only one VRF was assigned.
FERC VRF G3 Discussion	**Guideline 3: Consistency among Reliability Standards** PRC-010-1 Requirement R6 similar to PRC-006-1 Requirement R6, which has an approved VRF of Lower.
FERC VRF G4 Discussion	**Guideline 4: Consistency with NERC Definitions of VRFs** PRC-010-1 Requirement R6 meets NERC's criterion for a Lower VRF. Though having a current UVLS Program database is necessary to properly inform accurate undervoltage studies and event analyses, this is a planning requirement that is administrative in nature; failure to annually update a UVLS Program database would not, under the anticipated Emergency, abnormal, or restorative conditions, be expected to adversely affect the electrical state or capability of the BES, or the ability to effectively monitor, control, or restore the BES. The applicable entities are always responsible for maintaining the reliability of the BES regardless of the situation.
FERC VRF G5 Discussion	**Guideline 5: Treatment of Requirements that Co-mingle More than One Obligation** PRC-010-1 Requirement R6 does not co-mingle reliability objectives of differing risk; the assigned VRF of Lower is consistent throughout the requirement.
Proposed Lower VSL	The applicable entity updated the database in accordance with Requirement R6 but was late by less than or equal to 30 calendar days.
Proposed Moderate VSL	The applicable entity updated the database in accordance with Requirement R6 but was late by less than or equal to 30 calendar days.
Proposed High VSL	The applicable entity updated the database in accordance with Requirement R6 but was late by more than 60 calendar days but less than or equal to 90

VRF and VSL Justifications – PRC-010-1 Requirement R6	
	calendar days.
Proposed Severe VSL	The applicable entity updated the database in accordance with Requirement R6 but was late by more than 90 calendar days. OR The applicable entity failed to update the database in accordance with Requirement R6.
NERC VSL Guidelines Discussion	PRC-010-1 Requirement R6 meets NERC's VSL Guidelines in that there is an incremental aspect to the VSLs for tardiness and a binary aspect for failure.
FERC VSL G1 Discussion	**Guideline 1: Violation Severity Level Assignments Should Not Have the Unintended Consequence of Lowering the Current Level of Compliance** PRC-010-1 Requirement R6 is replacing PRC-020-1 Requirement R1, which is applicable to the Regional Reliability Organization and has no associated VSLs. Therefore, there is no prior level of compliance.
FERC VSL G2 Discussion	**Guideline 2: Violation Severity Level Assignments Should Ensure Uniformity and Consistency in the Determination of Penalties** **Guideline 2a: The Single Violation Severity Level Assignment Category for "Binary" Requirements Is Not Consistent** N/A **Guideline 2b: Violation Severity Level Assignments that Contain Ambiguous Language** The proposed VSLs for PRC-010-1 Requirement R6 do not use any ambiguous terminology, thereby supporting uniformity and consistency in the determination of similar penalties for similar violations.
FERC VSL G3	**Guideline 3: Violation Severity Level Assignment Should Be Consistent with the Corresponding Requirement** The proposed VSLs for PRC-010-1 Requirement R6 use similar terminology to that used in the requirement and are therefore consistent with the requirement.
FERC VSL G4	**Guideline 4: Violation Severity Level Assignment Should Be Based on A Single Violation, Not on A Cumulative Number of Violations** The proposed VSLs for PRC-010-1 Requirement R6 are based on a single violation and not cumulative violations.

VRF and VSL Justifications – PRC-010-1 Requirement R7	
Proposed VRF	Lower
NERC VRF Discussion	PRC-010-1 Requirement R7 meets NERC's criterion for a Lower VRF. Though providing current and formatted data is necessary to properly support a UVLS Program database, which subsequently informs accurate undervoltage studies and event analyses, this is a planning requirement that is administrative in nature; failure to provide the data according to the format and schedule specified would not, under the anticipated Emergency, abnormal, or restorative conditions, be expected to adversely affect the electrical state or capability of the BES, or the ability to effectively monitor, control, or restore the BES. The applicable entities are always responsible for maintaining the reliability of the BES regardless of the situation.
FERC VRF G1 Discussion	**Guideline 1: Consistency w/ Blackout Report** N/A
FERC VRF G2 Discussion	**Guideline 2: Consistency within a Reliability Standard** PRC-010-1 Requirement R7 has no parts so only one VRF was assigned.
FERC VRF G3 Discussion	**Guideline 3 Consistency among Reliability Standards:** PRC-010-1 Requirement R7 is similar to PRC-006-1 Requirement R8, which has an approved VRF of Lower.
FERC VRF G4 Discussion	**Guideline 4: Consistency with NERC Definitions of VRFs** PRC-010-1 Requirement R7 meets NERC's criterion for a Lower VRF. Though providing current and formatted data is necessary to properly support a UVLS Program database, which subsequently informs accurate undervoltage studies and event analyses, this is a planning requirement that is administrative in nature; failure to provide the data according to the format and schedule specified would not, under the anticipated Emergency, abnormal, or restorative conditions, be expected to adversely affect the electrical state or capability of the BES, or the ability to effectively monitor, control, or restore the BES. The applicable entities are always responsible for maintaining the reliability of the BES regardless of the situation.
FERC VRF G5 Discussion	**Guideline 5: Treatment of Requirements that Co-mingle More than One Obligation** PRC-010-1 Requirement R7 does not co-mingle reliability objectives of differing risk; the assigned VRF of Lower is consistent throughout the requirement.
Proposed Lower VSL	The applicable entity provided data in accordance with Requirement R7 but was late by less than or equal to 30 calendar days per the specified schedule. OR

VRF and VSL Justifications – PRC-010-1 Requirement R7	
	The applicable entity provided data in accordance with Requirement R7 but the data was not provided according to the specified format.
Proposed Moderate VSL	The applicable entity provided data in accordance with Requirement R7 but was late by more than 30 calendar days but less than or equal to 60 calendar days per the specified schedule.
Proposed High VSL	The applicable entity provided data in accordance with Requirement R7 but was late by more than 60 calendar days but less than or equal to 90 calendar days per the specified schedule.
Proposed Severe VSL	The applicable entity provided data in accordance with Requirement R7 but was late by more than 90 calendar days per the specified schedule. OR The applicable entity failed to provide data in accordance with Requirement R7.
NERC VSL Guidelines Discussion	PRC-010-1 Requirement R7 meets NERC's VSL Guidelines in that the VSLs cover aspects of the requirement that are not equal in importance; there is an incremental aspect to the VSLs for tardiness and a binary aspect for failure.
FERC VSL G1 Discussion	**Guideline 1: Violation Severity Level Assignments Should Not Have the Unintended Consequence of Lowering the Current Level of Compliance** PRC-010-1 Requirement R7 is different in construct from the requirement it is replacing (PRC-021-1 Requirement R1) and, therefore, the VSLs cannot be compared. However, both sets of VSLs have incremental aspects and a binary aspect for failure.
FERC VSL G2 Discussion	**Guideline 2: Violation Severity Level Assignments Should Ensure Uniformity and Consistency in the Determination of Penalties** **Guideline 2a: The Single Violation Severity Level Assignment Category for "Binary" Requirements Is Not Consistent** N/A **Guideline 2b: Violation Severity Level Assignments that Contain Ambiguous Language** The proposed VSLs for PRC-010-1 Requirement R7 do not use any ambiguous terminology, thereby supporting uniformity and consistency in the determination of similar penalties for similar violations.
FERC VSL G3	**Guideline 3: Violation Severity Level Assignment Should Be Consistent with the Corresponding Requirement** The proposed VSLs for PRC-010-1 Requirement R7 use similar terminology to that used in the requirement and are therefore consistent with the requirement.

VRF and VSL Justifications – PRC-010-1 Requirement R7	
FERC VSL G4	**Guideline 4: Violation Severity Level Assignment Should Be Based on A Single Violation, Not on A Cumulative Number of Violations** The proposed VSLs for PRC-010-1 Requirement R7 are based on a single violation and not cumulative violations.

VRF and VSL Justifications – PRC-010-1 Requirement R8	
Proposed VRF	Lower
NERC VRF Discussion	PRC-010-1 Requirement R8 meets NERC's criterion for a Lower VRF. Though sharing a UVLS Program database with applicable entities in a timely manner supports an integrated and coordinated approach to UVLS programs, this is a planning requirement that is administrative in nature; failure to share the database within 30 calendar days of a request would not, under the anticipated Emergency, abnormal, or restorative conditions, be expected to adversely affect the electrical state or capability of the BES, or the ability to effectively monitor, control, or restore the BES. The applicable entities are always responsible for maintaining the reliability of the BES regardless of the situation.
FERC VRF G1 Discussion	**Guideline 1: Consistency w/ Blackout Report** N/A
FERC VRF G2 Discussion	**Guideline 2: Consistency within a Reliability Standard** The requirement has no parts so only one VRF was assigned.
FERC VRF G3 Discussion	**Guideline 3: Consistency among Reliability Standards** PRC-010-1 Requirement R8 is similar to PRC-006-1 Requirement R7, which has an approved VRF of Lower.
FERC VRF G4 Discussion	**Guideline 4: Consistency with NERC Definitions of VRFs** PRC-010-1 Requirement R8 meets NERC's criterion for a Lower VRF. Though sharing a UVLS Program database with applicable entities in a timely manner supports an integrated and coordinated approach to UVLS programs, this is a planning requirement that is administrative in nature; failure to share the database within 30 calendar days of a request would not, under the anticipated Emergency, abnormal, or restorative conditions, be expected to adversely affect the electrical state or capability of the BES, or the ability to effectively monitor, control, or restore the BES. The applicable entities are always responsible for maintaining the reliability of the BES regardless of the situation.
FERC VRF G5 Discussion	**Guideline 5: Treatment of Requirements that Co-mingle More than One Obligation** PRC-010-1 Requirement R8 does not co-mingle reliability objectives of differing risk; the assigned VRF of Lower is consistent throughout the requirement.
Proposed Lower VSL	The applicable entity provided its UVLS Program database in accordance with Requirement R8 but was late by less than or equal to 15 calendar days.
Proposed Moderate VSL	The applicable entity provided its UVLS Program database in accordance with Requirement R8 but was late by more than 15 calendar days but less than or equal to 30 calendar days.

VRF and VSL Justifications – PRC-010-1 Requirement R8	
Proposed High VSL	The applicable entity provided its UVLS Program database in accordance with Requirement R8 but was late by more than 30 calendar days but less than or equal to 45 calendar days.
Proposed Severe VSL	The applicable entity provided its UVLS Program database in accordance with Requirement R8 but was late by more than 45 calendar days. OR The applicable entity failed to provide its UVLS Program database in accordance with Requirement R8.
NERC VSL Guidelines Discussion	PRC-010-1 Requirement R8 meets NERC's VSL Guidelines in that there is an incremental aspect to the VSLs for tardiness and a binary aspect for failure.
FERC VSL G1 Discussion	**Guideline 1: Violation Severity Level Assignments Should Not Have the Unintended Consequence of Lowering the Current Level of Compliance** PRC-010-1 Requirement R8 is replacing PRC-020-1 Requirement R2, which is applicable to the Regional Reliability Organization and has no associated VSLs. Therefore, there is no prior level of compliance.
FERC VSL G2 Discussion	**Guideline 2: Violation Severity Level Assignments Should Ensure Uniformity and Consistency in the Determination of Penalties** **Guideline 2a: The Single Violation Severity Level Assignment Category for "Binary" Requirements Is Not Consistent** N/A **Guideline 2b: Violation Severity Level Assignments that Contain Ambiguous Language** The proposed VSLs for PRC-010-1 Requirement R8 do not use any ambiguous terminology, thereby supporting uniformity and consistency in the determination of similar penalties for similar violations.
FERC VSL G3	**Guideline 3: Violation Severity Level Assignment Should Be Consistent with the Corresponding Requirement** The proposed VSLs for PRC-010-1 Requirement R8 use similar terminology to that used in the requirement and are therefore consistent with the requirement.
FERC VSL G4	**Guideline 4: Violation Severity Level Assignment Should Be Based on A Single Violation, Not on A Cumulative Number of Violations** The proposed VSLs for PRC-010-1 Requirement R8 are based on a single violation and not cumulative violations.

Exhibit F

Summary of Development History and Record of Development

Summary of Development History

Summary of Development History

The development record for proposed Reliability Standards PRC-004-5 and PRC-010-2 is summarized below.

I. Overview of the Standard Drafting Team

When evaluating a proposed Reliability Standard, the Commission is expected to give "due weight" to the technical expertise of the ERO.[1] The technical expertise of the ERO is derived from the standard drafting team. For this project, the standard drafting team consisted of industry experts, all with a diverse set of experiences. A roster of the standard drafting team members is included in Exhibit G.

II. Standard Development History

A. Standard Authorization Request Development

A Standard Authorization Request ("SAR") for Project 2008-02 Undervoltage Load Shedding (UVLS) was posted for a 30-day informal comment period from January 20, 2010 through February 19, 2010. A revised SAR was posted from September 10, 2013 through October 9, 2013. This SAR was relied upon for development of this Project 2008-02.2.[2]

B. First Posting - Comment Period, Ballot and Non-Binding Poll

Proposed Reliability Standards PRC-004-5 and PRC-010-2 were posted for a 45-day comment period from February 20, 2015 through April 7, 2015, with an initial ballot held from March 27, 2015 through April 7, 2015. Several documents were posted for guidance with the first draft, including the Unofficial Comment Form, Mapping

---

1 Section 215(d)(2) of the Federal Power Act; 16 U.S.C. §824(d) (2) (2012).

2 NERC, *SC Agenda Package*, at Agenda Item 8, (Feb. 18, 2015), *available at* http://www.nerc.com/comm/SC/Agenda%20Highlights%20and%20Minutes/SC_021815%20Package_021715_v2.pdf.

Document, and Reliability Standards PRC-004-3 and PRC-010-1 Violation Risk Factors ("VRFs") and Violation Severity Levels ("VSLs") Justification Documents. The initial ballot received 79.93% quorum, and 84.31% approval. The Non-Binding Poll received 79.63% quorum and 88.10% of supportive opinions. There were 49 sets of comments, including comments from approximately 45 different individuals and approximately 40 companies, representing 7 of the 10 industry segments.[3]

C. Final Ballot

Proposed Reliability Standards PRC-004-5 and PRC-010-2 were posted for a 10-final ballot period from April 17, 2015 through April 27, 2015. The proposed Reliability Standards received 84.86% quorum and 89.63% approval.

D. Board of Trustees Adoption

Proposed Reliability Standards PRC-004-5 and PRC-010-2 were adopted by the NERC Board of Trustees on May 7, 2015.

[3] NERC, *Consideration of Comments*, Project 2008-02.2, (April 17, 2015), *available at* http://www.nerc.com/pa/Stand/Prjct200802_2Phs2UndrvltgLdShddngUVLSMsoprtnsDL/ConsiderationofComments_with_Summary_added_2008-02.2_UVLS_05282015.pdf.

Complete Record of Development

Project 2008-02.2 Phase 2 of Undervoltage Load Shedding (UVLS): Misoperations

Related Files | 2008-02 Undervoltage Load Shedding (UVLS) & Underfrequency Load Shedding (UFLS) | 2010-05.1 Protection System (Misoperations)

Status

Board Adopted: May 7, 2015 - PRC-004-5 and PRC-10-2

Filed with FERC:
US Enforcement Date
Filings and Orders

Background

During the development of PRC-004-3 (Project 2010-05.1) and PRC-010-1 (Project 2008-02), both standard drafting teams decided that the UVLS standard drafting team would address the Misoperation of UVLS Protection Systems due to their work involving PRC-022-1 (*Under-Voltage Load Shedding Program Performance*). The PRC-022-1 Reliability Standard addressed Misoperation of UVLS; however, it is being retired with the creation of PRC-010-1, which was adopted by the NERC Board of Trustees (Board) on November 13, 2014.

This phase of the UVLS project will address Misoperation of UVLS equipment to complete the work anticipated by the two standard drafting teams. The UVLS standard drafting team is currently working to make the necessary standard changes and anticipates submitting proposed changes to NERC Board in May for adoption pending favorable ballot results.

Standard(s) Affected - PRC-004-5 and PRC-010-2

Purpose / Industry Need

A key element for Bulk Electric System (BES) reliability is the correct performance of UVLS Programs that are used in arresting voltage declines and to allow the BES to recover. The identification and correction of any Misoperation of UVLS Protection Systems in a UVLS Program ensures dependable UVLS Program performance.

Draft	Actions	Dates	Results	Consideration of Comments
Final Draft **PRC-004-5** Clean **(18)** | Redline to Last Posted **(19)** Redline to Last Adopted **(20)** **Implementation Plan** Clean **(21)** | Redline to Last Posted **(22)** **PRC-010-2** Clean **(23)** | Redline to Last Posted **(24)** Redline to Last Adopted **(25)** **Implementation Plan** Clean **(26)** | Redline to Last Posted **(27)**	Final Ballot Info **(32)** Vote	04/17/15 – 04/27/15	Summary **(33)** Ballot Results **(34)**	

Supporting Materials **Mapping Document** Clean **(28)** | Redline to Last Posted **(29)** **PRC-004-3** VRF/VSL Justification **(30)** **PRC-010-1** VRF/VSL Justification **(31)**				
Draft 1 **PRC-004-5** Clean **(1)** | Redline to Last Adopted **(2)** Implementation Plan **(3)** **PRC-010-2** Clean **(4)** | Redline to Last Adopted **(5)** Implementation Plan **(6)** **Supporting Materials** Unofficial Comment Form (Word) **(7)** **Mapping Document** **PRC-004-3** VRF/VSL Justification **(8)** **PRC-010-1** VRF/VSL Justification **(9)** **PRC-004-5** Draft RSAW **PRC-010-2** Draft RSAW	Initial Ballot and Non-Binding Poll Updated Info **(12)** Info **(13)** Vote	03/27/15 - 04/07/15	Summary **(14)** Ballot Results **(15)** Non-binding Poll Results **(16)**	Consideration of Comments **(17)**
	Comment Period Info **(10)** Submit Comments The drafting team did not make substantive changes to PRC-004-5 and PRC-010-2. Therefore, the VRF/VSL Justification documents from the development of PRC-004-3 and PRC-010-1 are posted for reference.	02/20/15 - 04/07/15	Comments Received **(11)**	
	Join Ballot Pool Initially, separate ballot pools were incorrectly created for PRC-004-5 and PRC-010-2. The SBS has been updated with one ballot pool to combine PRC-004-5 and PRC-010-2. If you have already joined the separate ballot	02/20/15 - 3/23/15		

	pools, please register in the combined ballot pool.			
	Send RSAW feedback to: RSAWfeedback@nerc.net	02/20/15 - 04/07/15		

Standard Development Timeline

This section is maintained by the drafting team during the development of the standard and will be removed when the standard becomes effective.

Development Steps Completed

1. NERC Board of Trustees ("Board") adopted PRC-004-4 and PRC-010-1 and retired PRC-022-1 on November 12, 2014.
2. NERC Standards Committee authorized initial posting of the standard on February 18, 2015.

Description of Current Draft

The UVLSSDT is posting Draft 1 of PRC-004-5 – Protection System Misoperation Identification and Correction for a 45-day initial formal comment period and concurrent/parallel initial ballot in the last ten days of the comment period. The draft contains revisions to the Applicability section to address UVLS equipment.

Anticipated Actions	Date
45-day formal comment period with ballot	February 2015
10-day final ballot	April 2015
Board adoption	May 2015

Project Development Background

The undervoltage load shedding (UVLS) standard drafting team (SDT) was tasked with addressing Misoperation of UVLS equipment during the development of version one of PRC-010 and version three of PRC-004 in Project 2010-05.1 (i.e., Misoperation). This project has been named phase 2 of Project 2008-02 (i.e., UVLS) for clarity purposes. Each SDT for these two projects outlined work necessary to address Misoperation of UVLS equipment. This work was deferred, at the time, because both PRC-010-1 and PRC-004-3 contained dependencies with other projects requiring their completion. This phase two is a continuation of the work performed under the Standards Authorization Request (SAR) for Project 2008-02.

The revisions proposed in Reliability Standard PRC-010-2 meet the following objectives:

- Address the UVLS Misoperation the remaining work due to the retirement of PRC-022-1 (*Undervoltage Load Shedding Program Performance*) during the development of PRC-010-1 (*Undervoltage Load Shedding*)
- Ensure UVLS equipment (i.e., operation or non-operation) within the UVLS Program is assessed and mitigated

Basis for Revision

Originally, Misoperation of UVLS equipment was planned to be appended to a future version of PRC-004 (*Protection System Misoperation Identification and Correction*). The SDT is proposing a two-prong approach by revising both PRC-004 and PRC-010 to address the concern of identifying Misoperations of UVLS equipment in PRC-022-1.

First, the SDT proposes an addition to the Applicability section of PRC-004 to include UVLS that is intended to trip one or more Bulk Electric System (BES) Elements. This is consistent with previous communication to industry about addressing Misoperation of UVLS equipment.[1] Entities will be required to address UVLS that trips a BES Element similarly to other Protection Systems in PRC-004. While the revision to PRC-004 consistent with the communicated approach, the SDT determined that the proposed revision fails to address the performance (operation or non-operations) of UVLS Program equipment not covered by the strict processes of PRC-004.

Second, the SDT is proposing clarifying revisions in PRC-010-2, Requirements R4 and R5 to address UVLS Program equipment performance. These revisions are not requiring UVLS entities to address UVLS protective relays not covered by the strict processes of PRC-004; however, PRC-010-2 is requiring UVLS entities to address the deficiencies (e.g., Misoperations) identified in the assessment performed by Planning Coordinator or Transmission Planner in Requirement R4. Deficiencies include the performance (operation or non-operation) issues of UVLS Program equipment. These deficiencies, if any, are addressed by the UVLS entities through a Corrective Action Plan (CAP) developed in Requirement R5 and executed by the UVLS entities in Requirement R2 of PRC-010.

The term “Misoperation” as defined by the *Glossary of Terms Used in NERC Reliability Standards* is not used within the Requirements of PRC-010; however, the term is used in the Guidelines and Technical Basis section of the standard to provide clarity that UVLS Program equipment deficiencies include Misoperations that are to be corrected by UVLS entities. The PRC-010-2 Reliability Standard mandates that UVLS entities are to correct the deficiencies identified by the Planning Coordinator or Transmission Planner, such as Misoperation of UVLS equipment. Deficiencies are identified through either the periodic assessment or an assessment performed following an event and included in a CAP to the UVLS entity. The structure used by the SDT allows the Planning Coordinator and Transmission Planner to assess UVLS equipment for Misoperation under PRC-010 rather than the Generator Owner, Transmission Owner, and Distribution Provider applicable to the strict processes of PRC-004.

The two-pronged approach ensures that any UVLS Program equipment containing a deficiency is identified and corrected under PRC-010 and UVLS that trips a BES Element under is corrected under PRC-004 to address the requirements in the retired PRC-022-1.

[1] Refer to Implementation Plan for PRC-010-1 (http://www.nerc.com/pa/stand/Pages/PRC0101RI.aspx) and PRC-010-1 (http://www.nerc.com/pa/Stand/Pages/ReliabilityStandards.aspx), Introduction in the Guidelines and Technical Basis, last paragraph.

A. Introduction

1. **Title: Protection System Misoperation Identification and Correction**

2. **Number:** PRC-004-5

3. **Purpose:** Identify and correct the causes of Misoperations of Protection Systems for Bulk Electric System (BES) Elements.

4. **Applicability:**

   4.1. Functional Entities:

   4.1.1 Transmission Owner

   4.1.2 Generator Owner

   4.1.3 Distribution Provider

   4.2. Facilities:

   4.2.1 Protection Systems for BES Elements, with the following exclusions:

   4.2.1.1 Non-protective functions that are embedded within a Protection System.

   4.2.1.2 Protective functions intended to operate as a control function during switching.[2]

   4.2.1.3 Special Protection Systems (SPS).

   4.2.1.4 Remedial Action Schemes (RAS).

   4.2.1.5 Protection Systems of individual dispersed power producing resources identified under Inclusion I4 of the BES definition where the Misoperations affected an aggregate nameplate rating of less than or equal to 75 MVA of BES Facilities.

   4.2.2 Underfrequency load shedding (UFLS) that is intended to trip one or more BES Elements.

   4.2.3 Undervoltage load shedding (UVLS) that is intended to trip one or more BES Elements.

5. **Effective Date:** See Project 2008-02.2 Implementation Plan.

[2] For additional information and examples, see the "Non-Protective Functions" and "Control Functions" sections in the Application Guidelines.

B. Requirements and Measures

R1. Each Transmission Owner, Generator Owner, and Distribution Provider that owns a BES interrupting device that operated under the circumstances in Parts 1.1 through 1.3 shall, within 120 calendar days of the BES interrupting device operation, identify whether its Protection System component(s) caused a Misoperation: *[Violation Risk Factor: Medium][Time Horizon: Operations Assessment, Operations Planning]*

1.1 The BES interrupting device operation was caused by a Protection System or by manual intervention in response to a Protection System failure to operate; and

1.2 The BES interrupting device owner owns all or part of the Composite Protection System; and

1.3 The BES interrupting device owner identified that its Protection System component(s) caused the BES interrupting device(s) operation or was caused by manual intervention in response to its Protection System failure to operate.

M1. Each Transmission Owner, Generator Owner, and Distribution Provider shall have dated evidence that demonstrates it identified the Misoperation of its Protection System component(s), if any, that meet the circumstances in Requirement R1, Parts 1.1, 1.2, and 1.3 within the allotted time period. Acceptable evidence for Requirement R1, including Parts 1.1, 1.2, and 1.3 may include, but is not limited to the following dated documentation (electronic or hardcopy format): reports, databases, spreadsheets, emails, facsimiles, lists, logs, records, declarations, analyses of sequence of events, relay targets, Disturbance Monitoring Equipment (DME) records, test results, or transmittals.

R2. Each Transmission Owner, Generator Owner, and Distribution Provider that owns a BES interrupting device that operated shall, within 120 calendar days of the BES interrupting device operation, provide notification as described in Parts 2.1 and 2.2. *[Violation Risk Factor: Medium][Time Horizon: Operations Assessment, Operations Planning]*

2.1 For a BES interrupting device operation by a Composite Protection System or by manual intervention in response to a Protection System failure to operate, notification of the operation shall be provided to the other owner(s) that share Misoperation identification responsibility for the Composite Protection System under the following circumstances:

2.1.1 The BES interrupting device owner shares the Composite Protection System ownership with any other owner; and

2.1.2 The BES interrupting device owner has determined that a Misoperation occurred or cannot rule out a Misoperation; and

2.1.3 The BES interrupting device owner has determined that its Protection System component(s) did not cause the BES interrupting device(s) operation or cannot determine whether its Protection System components caused the BES interrupting device(s) operation.

2.2 For a BES interrupting device operation by a Protection System component intended to operate as backup protection for a condition on another entity's BES Element, notification of the operation shall be provided to the other Protection System owner(s) for which that backup protection was provided.

M2. Each Transmission Owner, Generator Owner, and Distribution Provider shall have dated evidence that demonstrates notification to the other owner(s), within the allotted time period for either Requirement R2, Part 2.1, including subparts 2.1.1, 2.1.2, and 2.1.3 and Requirement R2, Part 2.2. Acceptable evidence for Requirement R2, including Parts 2.1 and 2.2 may include, but is not limited to the following dated documentation (electronic or hardcopy format): emails, facsimiles, or transmittals.

R3. Each Transmission Owner, Generator Owner, and Distribution Provider that receives notification, pursuant to Requirement R2 shall, within the later of 60 calendar days of notification or 120 calendar days of the BES interrupting device(s) operation, identify whether its Protection System component(s) caused a Misoperation. *[Violation Risk Factor: Medium][Time Horizon: Operations Assessment, Operations Planning]*

M3. Each Transmission Owner, Generator Owner, and Distribution Provider shall have dated evidence that demonstrates it identified whether its Protection System component(s) caused a Misoperation within the allotted time period. Acceptable evidence for Requirement R3 may include, but is not limited to the following dated documentation (electronic or hardcopy format): reports, databases, spreadsheets, emails, facsimiles, lists, logs, records, declarations, analyses of sequence of events, relay targets, DME records, test results, or transmittals.

R4. Each Transmission Owner, Generator Owner, and Distribution Provider that has not determined the cause(s) of a Misoperation, for a Misoperation identified in accordance with Requirement R1 or R3, shall perform investigative action(s) to determine the cause(s) of the Misoperation at least once every two full calendar quarters after the Misoperation was first identified, until one of the following completes the investigation: *[Violation Risk Factor: Medium] [Time Horizon: Operations Assessment, Operations Planning]*

- The identification of the cause(s) of the Misoperation; or
- A declaration that no cause was identified.

M4. Each Transmission Owner, Generator Owner, and Distribution Provider shall have dated evidence that demonstrates it performed at least one investigative action according to Requirement R4 every two full calendar quarters until a cause is identified or a declaration is made. Acceptable evidence for Requirement R4 may include, but is not limited to the following dated documentation (electronic or hardcopy format): reports, databases, spreadsheets, emails, facsimiles, lists, logs, records, declarations, analyses of sequence of events, relay targets, DME records, test results, or transmittals.

R5. Each Transmission Owner, Generator Owner, and Distribution Provider that owns the Protection System component(s) that caused the Misoperation shall, within 60 calendar days of first identifying a cause of the Misoperation: [*Violation Risk Factor: Medium*] [*Time Horizon: Operations Planning, Long-Term Planning*]

- Develop a Corrective Action Plan (CAP) for the identified Protection System component(s), and an evaluation of the CAP's applicability to the entity's other Protection Systems including other locations; or
- Explain in a declaration why corrective actions are beyond the entity's control or would not improve BES reliability, and that no further corrective actions will be taken.

M5. Each Transmission Owner, Generator Owner, and Distribution Provider shall have dated evidence that demonstrates it developed a CAP and an evaluation of the CAP's applicability to other Protection Systems and locations, or a declaration in accordance with Requirement R5. Acceptable evidence for Requirement R5 may include, but is not limited to the following dated documentation (electronic or hardcopy format): CAP and evaluation, or declaration.

R6. Each Transmission Owner, Generator Owner, and Distribution Provider shall implement each CAP developed in Requirement R5, and update each CAP if actions or timetables change, until completed. *[Violation Risk Factor: Medium][Time Horizon: Operations Planning, Long-Term Planning]*

M6. Each Transmission Owner, Generator Owner, and Distribution Provider shall have dated evidence that demonstrates it implemented each CAP, including updating actions or timetables. Acceptable evidence for Requirement R6 may include, but is not limited to the following dated documentation (electronic or hardcopy format): records that document the implementation of each CAP and the completion of actions for each CAP including revision history of each CAP. Evidence may also include work management program records, work orders, and maintenance records.

C. Compliance

1. Compliance Monitoring Process

1.1. Compliance Enforcement Authority

As defined in the NERC Rules of Procedure, "Compliance Enforcement Authority" (CEA) means NERC or the Regional Entity in their respective roles of monitoring and enforcing compliance with the NERC Reliability Standards.

1.2. Evidence Retention

The following evidence retention periods identify the period of time an entity is required to retain specific evidence to demonstrate compliance. For instances where the evidence retention period specified below is shorter than the time since the last audit, the CEA may ask an entity to provide other evidence to show that it was compliant for the full time period since the last audit.

The Transmission Owner, Generator Owner, and Distribution Provider shall keep data or evidence to show compliance as identified below unless directed by its CEA to retain specific evidence for a longer period of time as part of an investigation.

The Transmission Owner, Generator Owner, and Distribution Provider shall retain evidence of Requirements R1, R2, R3, and R4, Measures M1, M2, M3, and M4 for a minimum of 12 calendar months following the completion of each Requirement.

The Transmission Owner, Generator Owner, and Distribution Provider shall retain evidence of Requirement R5, Measure M5, including any supporting analysis per Requirements R1, R2, R3, and R4, for a minimum of 12 calendar months following completion of each CAP, completion of each evaluation, and completion of each declaration.

The Transmission Owner, Generator Owner, and Distribution Provider shall retain evidence of Requirement R6, Measure M6 for a minimum of 12 calendar months following completion of each CAP.

If a Transmission Owner, Generator Owner, or Distribution Provider is found non-compliant, it shall keep information related to the non-compliance until mitigation is complete and approved, or for the time specified above, whichever is longer.

The CEA shall keep the last audit records and all requested and submitted subsequent audit records.

1.3. Compliance Monitoring and Assessment Processes

Compliance Audit

Self-Certification

Spot Checking

Compliance Investigation

Self-Reporting

Complaint

1.4. Additional Compliance Information

None**.**

D. Table of Compliance Elements

R #	Time Horizon	VRF	Violation Severity Levels			
			Lower VSL	Moderate VSL	High VSL	Severe VSL
R1	Operations Assessment, Operations Planning	Medium	The responsible entity identified whether its Protection System component(s) caused a Misoperation in accordance with Requirement R1, but in more than 120 calendar days and less than or equal to 150 calendar days of the BES interrupting device operation.	The responsible entity identified whether its Protection System component(s) caused a Misoperation in accordance with Requirement R1, but in more than 150 calendar days and less than or equal to 165 calendar days of the BES interrupting device operation.	The responsible entity identified whether its Protection System component(s) caused a Misoperation in accordance with Requirement R1, but in more than 165 calendar days and less than or equal to 180 calendar days of the BES interrupting device operation.	The responsible entity identified whether its Protection System component(s) caused a Misoperation in accordance with Requirement R1, but in more than 180 calendar days of the BES interrupting device operation. OR The responsible entity failed to identify whether its Protection System component(s) caused a Misoperation in accordance with Requirement R1.

R #	Time Horizon	VRF	Violation Severity Levels			
			Lower VSL	Moderate VSL	High VSL	Severe VSL
R2	Operations Assessment, Operations Planning	Medium	The responsible entity notified the other owner(s) of the Protection System component(s) in accordance with Requirement R2, but in more than 120 calendar days and less than or equal to 150 calendar days of the BES interrupting device operation.	The responsible entity notified the other owner(s) of the Protection System component(s) in accordance with Requirement R2, but in more than 150 calendar days and less than or equal to 165 calendar days of the BES interrupting device operation.	The responsible entity notified the other owner(s) of the Protection System component(s) in accordance with Requirement R2, but in more than 165 calendar days and less than or equal to 180 calendar days of the BES interrupting device operation.	The responsible entity notified the other owner(s) of the Protection System component(s) in accordance with Requirement R2, but in more than 180 calendar days of the BES interrupting device operation. OR The responsible entity failed to notify one or more of the other owner(s) of the Protection System component(s) in accordance with Requirement R2.

R #	Time Horizon	VRF	Violation Severity Levels			
			Lower VSL	Moderate VSL	High VSL	Severe VSL
R3	Operations Assessment, Operations Planning	Medium	The responsible entity identified whether or not its Protection System component(s) caused a Misoperation in accordance with Requirement R3, but was less than or equal to 30 calendar days late.	The responsible entity identified whether or not its Protection System component(s) caused a Misoperation in accordance with Requirement R3, but was greater than 30 calendar days and less than or equal to 45 calendar days late.	The responsible entity identified whether or not its Protection System component(s) caused a Misoperation in accordance with Requirement R3, but was greater than 45 calendar days and less than or equal to 60 calendar days late.	The responsible entity identified whether or not its Protection System component(s) caused a Misoperation in accordance with Requirement R3, but was greater than 60 calendar days late. OR The responsible entity failed to identify whether or not a Misoperation of its Protection System component(s) occurred in accordance with Requirement R3.

R #	Time Horizon	VRF	Violation Severity Levels			
			Lower VSL	Moderate VSL	High VSL	Severe VSL
R4	Operations Assessment, Operations Planning	Medium	The responsible entity performed at least one investigative action in accordance with Requirement R4, but was less than or equal to one calendar quarter late.	The responsible entity performed at least one investigative action in accordance with Requirement R4, but was greater than one calendar quarter and less than or equal to two calendar quarters late.	The responsible entity performed at least one investigative action in accordance with Requirement R4, but was greater than two calendar quarters and less than or equal to three calendar quarters late.	The responsible entity performed at least one investigative action in accordance with Requirement R4, but was more than three calendar quarters late. OR The responsible entity failed to perform investigative action(s) in accordance with Requirement R4.

R #	Time Horizon	VRF	Violation Severity Levels			
			Lower VSL	Moderate VSL	High VSL	Severe VSL
R5	Operations Planning, Long-Term Planning	Medium	The responsible entity developed a CAP, or explained in a declaration in accordance with Requirement R5, but in more than 60 calendar days and less than or equal to 70 calendar days of first identifying a cause of the Misoperation. OR (See next page)	The responsible entity developed a CAP, or explained in a declaration in accordance with Requirement R5, but in more than 70 calendar days and less than or equal to 80 calendar days of first identifying a cause of the Misoperation. OR (See next page)	The responsible entity developed a CAP, or explained in a declaration in accordance with Requirement R5, but in more than 80 calendar days and less than or equal to 90 calendar days of first identifying a cause of the Misoperation. OR (See next page)	The responsible entity developed a CAP, or explained in a declaration in accordance with Requirement R5, but in more than 90 calendar days of first identifying a cause of the Misoperation. OR The responsible entity failed to develop a CAP or explain in a declaration in accordance with Requirement R5. OR (See next page)

R #	Time Horizon	VRF	Violation Severity Levels			
			Lower VSL	Moderate VSL	High VSL	Severe VSL
R5	(Continued)		The responsible entity developed an evaluation in accordance with Requirement R5, but in more than 60 calendar days and less than or equal to 70 calendar days of first identifying a cause of the Misoperation.	The responsible entity developed an evaluation in accordance with Requirement R5, but in more than 70 calendar days and less than or equal to 80 calendar days of first identifying a cause of the Misoperation.	The responsible entity developed an evaluation in accordance with Requirement R5, but in more than 80 calendar days and less than or equal to 90 calendar days of first identifying a cause of the Misoperation.	The responsible entity developed an evaluation in accordance with Requirement R5, but in more than 90 calendar days of first identifying a cause of the Misoperation. OR The responsible entity failed to develop an evaluation in accordance with Requirement R5.
R6	Operations Planning, Long-Term Planning	Medium	The responsible entity implemented, but failed to update a CAP, when actions or timetables changed, in accordance with Requirement R6.	N/A	N/A	The responsible entity failed to implement a CAP in accordance with Requirement R6.

E. Regional Variances

None.

F. Interpretations

None.

G. Associated Documents

NERC System Protection and Controls Subcommittee of the NERC Planning Committee, Assessment of Standards: PRC-003-1 – Regional Procedure for Analysis of Misoperations of Transmission and Generation Protection Systems, PRC-004-1 – Analysis and Mitigation of Transmission and Generation Protection Misoperations, PRC-016-1 – Special Protection System Misoperations, May 22, 2009.[3]

Version History

Version	Date	Action	Change Tracking
0	April 1, 2005	Effective Date	New
1	December 1, 2005	1. Changed incorrect use of certain hyphens (-) to "en dash" (–) and "em dash (—)." 2. Added "periods" to items where appropriate. 3. Changed "Timeframe" to "Time Frame" in item D, 1.2.	01/20/06
1a	February 17, 2011	Adopted by NERC Board of Trustees	Project 2009-17 interpretation adding Appendix 1 - Interpretation regarding applicability of standard to protection of radially connected transformers

[3] http://www.nerc.com/comm/PC/System%20Protection%20and%20Control%20Subcommittee%20SPCS%20DL/PRC-003-004-016%20Report.pdf

Version	Date	Action	Change Tracking
1a	September 26, 2011	Appended FERC-approved interpretation of R1 and R3 to version 1	FERC's Order approving the interpretation of R1 and R3 is effective as of September 26, 2011
2	August 5, 2010	Adopted by NERC Board of Trustees	Project 2010-12 modifications to address Order No. 693 Directives contained in paragraph 1469
2a	September 26, 2011	Appended FERC-approved interpretation of R1 and R3 to version 2	FERC's Order approving the interpretation of R1 and R3 is effective as of September 26, 2011
2.1a	February 9, 2012	Adopted by NERC Board of Trustees	Errata change under Project 2010-07 to add "…and generator interconnection Facility…"
3	August 14, 2014	Adopted by NERC Board of Trustees	Revision under Project 2010-05.1
4	November 13, 2014	Adopted by NERC Board of Trustees	Applicability revision under Project 2014-01 to clarify application of Requirements to BES dispersed power producing resources
5		Adopted by NERC Board of Trustees	Revision under Project 2008-02.2

Guidelines and Technical Basis

Introduction

This standard addresses the reliability issues identified in the letter[4] from Gerry Cauley, NERC President and CEO, dated January 7, 2011.

> "Nearly all major system failures, excluding perhaps those caused by severe weather, have misoperations of relays or automatic controls as a factor contributing to the propagation of the failure. …Relays can misoperate, either operate when not needed or fail to operate when needed, for a number of reasons. First, the device could experience an internal failure – but this is rare. Most commonly, relays fail to operate correctly due to incorrect settings, improper coordination (of timing and set points) with other devices, ineffective maintenance and testing, or failure of communications channels or power supplies. Preventable errors can be introduced by field personnel and their supervisors or more programmatically by the organization."

The standard also addresses the findings in the *2011 Risk Assessment of Reliability Performance*[5]; July 2011.

> "…a number of multiple outage events were initiated by protection system Misoperations. These events, which go beyond their design expectations and operating procedures, represent a tangible threat to reliability. A deeper review of the root causes of dependent and common mode events, which include three or more automatic outages, is a high priority for NERC and the industry."

The *State of Reliability 2014*[6] report continued to identify Protection System Misoperations as a significant contributor to automatic transmission outage severity. The report recommended completion of the development of PRC-004-3 as part of the solution to address Protection System Misoperations.

Definitions

The Misoperation definition is based on the IEEE/PSRC Working Group I3 "Transmission Protective Relay System Performance Measuring Methodology[7]." Misoperations of a Protection System include failure to operate, slowness in operating, or operating when not required either during a Fault or non-Fault condition.

---

[4] http://www.nerc.com/pa/Stand/Project%20201005%20Protection%20System%20Misoperations%20DL/20110209130708-Cauley%20letter.pdf

[5] "2011 Risk Assessment of Reliability Performance." NERC. http://www.nerc.com/files/2011_RARPR_FINAL.pdf. July 2011. Pg. 3.

[6] "State of Reliability 2014." NERC. http://www.nerc.com/pa/Stand/Pages/RelaibilityCoordinationProject20066.aspx. May 2014. Pg. 18 of 106.

[7] "Transmission Protective Relay System Performance Measuring Methodology." Working Group I3 of Power System Relaying Committee of IEEE Power Engineering Society. 1999.

For reference, a "Protection System" is defined in the *Glossary of Terms Used in NERC Reliability Standards* ("NERC Glossary") as:

- Protective relays which respond to electrical quantities,
- Communications systems necessary for correct operation of protective functions,
- Voltage and current sensing devices providing inputs to protective relays,
- Station dc supply associated with protective functions (including station batteries, battery chargers, and non-battery-based dc supply), and
- Control circuitry associated with protective functions through the trip coil(s) of the circuit breakers or other interrupting devices.

A BES interrupting device is a BES Element, typically a circuit breaker or circuit switcher that has the capability to interrupt fault current. Although BES interrupting device mechanisms are not part of a Protection System, the standard uses the operation of a BES interrupting device by a Protection System to initiate the review for Misoperation.

The following two definitions are being proposed for inclusion in the NERC Glossary:

> **Composite Protection System –** *The total complement of Protection System(s) that function collectively to protect an Element. Backup protection provided by a different Element's Protection System(s) is excluded.*

The Composite Protection System definition is based on the principle that an Element's multiple layers of protection are intended to function collectively. This definition has been introduced in this standard and incorporated into the proposed definition of Misoperation to clarify that the overall performance of an Element's total complement of protection should be considered while evaluating an operation.

Composite Protection System – Line Example

The Composite Protection System of the Alpha-Beta line (Circuit #123) is comprised of current differential, permissive overreaching transfer trip (POTT), step distance (classic zone 1, zone 2, and zone 3), instantaneous-overcurrent, time-overcurrent, out-of-step, and overvoltage protection. The protection is housed at the Alpha and Beta substations, and includes the associated relays, communications systems, voltage and current sensing devices, DC supplies, and control circuitry.

Composite Protection System – Transformer Example

The Composite Protection System of the Alpha transformer (#2) is comprised of internal differential, overall differential, instantaneous-overcurrent, and time-overcurrent protection. The protection is housed at the Alpha substation, and includes the associated relays, voltage and current sensing devices, DC supplies, and control circuitry.

Composite Protection System – Generator Example

The Composite Protection System of the Beta generator (#3) is comprised of generator differential, overall differential, overcurrent, stator ground, reverse power, volts per hertz, loss-of-field, and undervoltage protection. The protection is housed at the Beta generating plant and at the Beta substation, and includes the associated relays, voltage and current sensing devices, DC supplies, and control circuitry.

Composite Protection System – Breaker Failure Example

Breaker failure protection provides backup protection for the breaker, and therefore is part of the breaker's Composite Protection System. Considering breaker failure protection to be part of another Element's Composite Protection System could lead to an incorrect conclusion that a breaker failure operation automatically satisfies the "Slow Trip" criteria of the Misoperation definition.

- An example of a correct operation of the breaker's Composite Protection System is when the breaker failure relaying tripped because the line relaying operated, but the breaker failed to clear the Fault. The breaker failure relaying operated because of a failed trip coil. The failed trip coil caused a Misoperation of the line's Composite Protection System.
- An example of a correct operation of the breaker's Composite Protection System is when the breaker failure relaying tripped because the line relaying operated, but the breaker failed to clear the Fault. Only the breaker failure relaying operated because of a failed breaker mechanism. This was not a Misoperation because the breaker mechanism is not part of the breaker's Composite Protection System.
- An example of an "Unnecessary Trip – During Fault" is when the breaker failure relaying tripped at the same time as the line relaying during a Fault. The Misoperation was due to the breaker failure timer being set to zero.

Misoperation – *The failure a Composite Protection System to operate as intended for protection purposes. Any of the following is a Misoperation:*

1. **Failure to Trip – During Fault** *– A failure of a Composite Protection System to operate for a Fault condition for which it is designed. The failure of a Protection System component is not a Misoperation as long as the performance of the Composite Protection System is correct.*
2. ***Failure to Trip – Other Than Fault*** *– A failure of a Composite Protection System to operate for a non-Fault condition for which it is designed, such as a power swing, undervoltage, overexcitation, or loss of excitation. The failure of a Protection System component is not a Misoperation as long as the performance of the Composite Protection System is correct.*

3. ***Slow Trip – During Fault*** *– A Composite Protection System operation that is slower than required for a Fault condition if the duration of its operating time resulted in the operation of at least one other Element's Composite Protection System.*
4. ***Slow Trip – Other Than Fault*** *– A Composite Protection System operation that is slower than required for a non-Fault condition, such as a power swing, undervoltage, overexcitation, or loss of excitation, if the duration of its operating time resulted in the operation of at least one other Element's Composite Protection System.*
5. ***Unnecessary Trip – During Fault*** *– An unnecessary Composite Protection System operation for a Fault condition on another Element.*
6. ***Unnecessary Trip – Other Than Fault*** *– An unnecessary Composite Protection System operation for a non-Fault condition. A Composite Protection System operation that is caused by personnel during on-site maintenance, testing, inspection, construction, or commissioning activities is not a Misoperation.*

The Misoperation definition is based on the principle that an Element's total complement of protection is intended to operate dependably and securely.

- Failure to automatically reclose after a Fault condition is not included as a Misoperation because reclosing equipment is not included within the definition of Protection System.
- A breaker failure operation does not, in itself, constitute a Misoperation.
- A remote backup operation resulting from a "Failure to Trip" or a "Slow Trip" does not, in itself, constitute a Misoperation.

This proposed definition of Misoperation provides additional clarity over the current version. A Misoperation is the failure of a Composite Protection System to operate as intended for protection purposes. The definition includes six categories which provide further differentiation of what constitutes a Misoperation. These categories are discussed in greater detail in the following sections.

Failure to Trip – During Fault

This category of Misoperation typically results in the Fault condition being cleared by remote backup Protection System operation.

> **Example 1a:** A failure of a transformer's Composite Protection System to operate for a transformer Fault is a Misoperation.
>
> **Example 1b:** A failure of a "primary" transformer relay (or any other component) to operate for a transformer Fault is not a "Failure to Trip – During Fault" Misoperation as long as another component of the transformer's Composite Protection System operated.
>
> **Example 1c:** A lack of target information does not by itself constitute a Misoperation. When a high-speed pilot system does not target because a high-speed zone element trips first, it would not in and of itself be a Misoperation.
>
> **Example 1d:** A failure of an overall differential relay to operate is not a "Failure to Trip – During Fault" Misoperation as long as another component such as a generator differential relay operated.

> **Example 1e:** The Composite Protection System for a bus does not operate during a bus Fault which results in the operation of all local transformer Protection Systems connected to that bus and all remote line Protection Systems connected to that bus isolating the faulted bus from the grid. The operation of the local transformer Protection Systems and the operation of all remote line Protection Systems correctly provided backup protection. There is one "Failure to Trip – During Fault" Misoperation of the bus Composite Protection System.

In analyzing the Protection System for Misoperation, the entity must also consider whether the "Slow Trip – During Fault" category applies to the operation.

Failure to Trip – Other Than Fault

This category of Misoperation may have resulted in operator intervention. The "Failure to Trip – Other Than Fault" conditions cited in the definition are examples only, and do not constitute an all-inclusive list.

> **Example 2a:** A failure of a generator's Composite Protection System to operate for an unintentional loss of field condition is a Misoperation.
>
> **Example 2b:** A failure of an overexcitation relay (or any other component) is not a "Failure to Trip – Other Than Fault" Misoperation as long as the generator's Composite Protection System operated as intended isolating the generator from the BES.

In analyzing the Protection System for Misoperation, the entity must also consider whether the "Slow Trip – Other Than Fault" category applies to the operation.

Slow Trip – During Fault

This category of Misoperation typically results in remote backup Protection System operation before the Fault is cleared.

> **Example 3a:** A Composite Protection System that is slower than required for a Fault condition is a Misoperation if the duration of its operating time resulted in the operation of at least one other Element's Composite Protection System. The current differential element of a multiple function relay failed to operate for a line Fault. The same relay's time-overcurrent element operated after a time delay. However, an adjacent line also operated from a time-overcurrent element. The faulted line's time-overcurrent element was found to be set to trip too slowly.
>
> **Example 3b:** A failure of a breaker's Composite Protection System to operate as quickly as intended to meet the expected critical Fault clearing time for a line Fault in conjunction with a breaker failure (i.e., stuck breaker) is a Misoperation if it resulted in an unintended operation of at least one other Element's Composite Protection System. If a generating unit's Composite Protection System operates due to instability caused by the slow trip of the breaker's Composite Protection System, it is not an "Unnecessary Trip – During Fault" Misoperation of the generating unit's Composite Protection System. This event would be a "Slow Trip – During Fault" Misoperation of the breaker's Composite Protection System.

> **Example 3c:** A line connected to a generation interconnection station is protected with two independent high-speed pilot systems. The Composite Protection System for this line also includes step distance and time-overcurrent schemes in addition to the two pilot systems. During a Fault on this line, the two pilot systems fail to operate and the time-overcurrent scheme operates clearing the Fault with no generating units or other Elements tripping (i.e., no over-trips). This event is not a Misoperation.

The phrase “slower than required” means the duration of its operating time resulted in the operation of at least one other Element’s Composite Protection System. It would be impractical to provide a precise tolerance in the definition that would be applicable to every type of Protection System. Rather, the owner(s) reviewing each Protection System operation should understand whether the speed and outcome of its Protection System operation met their objective. The intent is not to require documentation of exact Protection System operation times, but to assure consideration of relay coordination and system stability by the owner(s) reviewing each Protection System operation.

The phrase “resulted in the operation of any other Composite Protection System” refers to the need to ensure that relaying operates in the proper or planned sequence (i.e., the primary relaying for a faulted Element operates before the remote backup relaying for the faulted Element).

In analyzing the Protection System for Misoperation, the entity must also consider the “Unnecessary Trip – During Fault” category to determine if an “unnecessary trip” applies to the Protection System operation of an Element other than the faulted Element.

If a coordination error was at the local terminal (i.e., set too slow), then it was a "Slow Trip," category of Misoperation at the local terminal.

Slow Trip – Other Than Fault

The phrase “slower than required” means the duration of its operating time resulted in the operation of at least one other Element’s Composite Protection System. It would be impractical to provide a precise tolerance in the definition that would be applicable to every type of Protection System. Rather, the owner(s) reviewing each Protection System operation should understand whether the speed and outcome of its Protection System operation met their objective. The intent is not to require documentation of exact Protection System operation times, but to assure consideration of relay coordination and system stability by the owner(s) reviewing each Protection System operation.

> **Example 4:** A phase to phase fault occurred on the terminals of a generator. The generator's Composite Protection System and a transmission line's Composite Protection System both operated in response to the fault. It was found during subsequent investigation that the generator protection contained an inappropriate time delay. This caused the transmission line's correctly set overreaching zone of protection to operate. This was a Misoperation of the generator’s Composite Protection System, but not of the transmission line’s Composite Protection System.

The “Slow Trip – Other Than Fault” conditions cited in the definition are examples only, and do not constitute an all-inclusive list.

Unnecessary Trip – During Fault

An operation of a properly coordinated remote Protection System is not in and of itself a Misoperation if the Fault has persisted for a sufficient time to allow the correct operation of the Composite Protection System of the faulted Element to clear the Fault. A BES interrupting device failure, a “failure to trip” Misoperation, or a “slow trip” Misoperation may result in a proper remote Protection System operation.

> **Example 5:** An operation of a transformer's Composite Protection System which trips (i.e., over-trips) for a properly cleared line Fault is a Misoperation. The Fault is cleared properly by the faulted equipment's Composite Protection System (i.e., line relaying) without the need for an external Protection System operation resulting in an unnecessary trip of the transformer protection; therefore, the transformer Protection System operation is a Misoperation.
>
> **Example 5b:** An operation of a line's Composite Protection System which trips (i.e., over-trips) for a properly cleared Fault on a different line is a Misoperation. The Fault is cleared properly by the faulted line's Composite Protection System (i.e., line relaying); however, elsewhere in the system, a carrier blocking signal is not transmitted (e.g., carrier ON/OFF switch found in OFF position) resulting in the operation of a remote Protection System, single-end trip of a non-faulted line. The operation of the Protection System for the non-faulted line is an unnecessary trip during a Fault. Therefore, the non-faulted line Protection System operation is an “Unnecessary Trip – During Fault” Misoperation.
>
> **Example 5c:** If a coordination error was at the remote terminal (i.e., set too fast), then it was an "Unnecessary Trip – During Fault" category of Misoperation at the remote terminal.

Unnecessary Trip – Other Than Fault

Unnecessary trips for non-Fault conditions include but are not limited to: power swings, overexcitation, loss of excitation, frequency excursions, and normal operations.

> **Example 6a:** An operation of a line's Composite Protection System due to a relay failure during normal operation is a Misoperation.
>
> **Example 6b:** Tripping a generator by the operation of the loss of field protection during an off-nominal frequency condition while the field is intact is a Misoperation assuming the Composite Protection System was not intended to operate under this condition.
>
> **Example 6c:** An impedance line relay trip for a power swing that entered the relay’s characteristic is a Misoperation if the power swing was stable and the relay operated because power swing blocking was enabled and should have prevented the trip, but did not.
>
> **Example 6d:** Tripping a generator operating at normal load by the operation of a reverse power protection relay due to a relay failure is a Misoperation.

Additionally, an operation that occurs during a non-Fault condition but was initiated directly by on-site (i.e., real-time) maintenance, testing, inspection, construction, or commissioning is not a Misoperation.

> **Example 6e:** A BES interrupting device operation that occurs at the remote end of a line during a non-Fault condition because a direct transfer trip was initiated by system maintenance and testing activities at the local end of the line is not a Misoperation because of the maintenance exclusion in category 6 of the definition of "Misoperation."

The "on-site" activities at one location that initiates a trip to another location are included in this exemption. This includes operation of a Protection System when energizing equipment to facilitate measurements, such as verification of current circuits as a part of performing commissioning; however, once the maintenance, testing, inspection, construction, or commissioning activity associated with the Protection System is complete, the "on-site" Misoperation exclusion no longer applies, regardless of the presence of on-site personnel.

Special Cases

Protection System operations for these cases would not be a Misoperation.

> **Example 7a:** A generator Protection System operation prior to closing the unit breaker(s) is not a Misoperation provided no in-service Elements are tripped.

This type of operation is not a Misoperation because the generating unit is not synchronized and is isolated from the BES. Protection System operations that occur when the protected Element is out of service and that do not trip any in-service Elements are not Misoperations.

In some cases where zones of protection overlap, the owner(s) of Elements may decide to allow a Protection System to operate faster in order to gain better overall Protection System performance for an Element.

> **Example 7b:** The high-side of a transformer connected to a line may be within the zone of protection of the supplying line's relaying. In this case, the line relaying is planned to protect the area of the high-side of the transformer and into its primary winding. In order to provide faster protection for the line, the line relaying may be designed and set to operate without direct coordination (or coordination is waived) with local protection for Faults on the high-side of the connected transformer. Therefore, the operation of the line relaying for a high-side transformer Fault operated as intended and would not be a Misoperation.

Below are examples of conditions that would be a Misoperation.

> **Example7c:** A 230 kV shunt capacitor bank was released for operational service. The capacitor bank trips due to a settings error in the capacitor bank differential relay upon energization.

> **Example 7d:** A 230/115 kV BES transformer bank trips out when being re-energized due to an incorrect operation of the transformer differential relay for inrush after being released for operational service. Only the high-side breaker opens since the low-side breaker had not yet been closed.

Non-Protective Functions

BES interrupting device operations which are initiated by non-protective functions, such as those associated with generator controls, excitation controls, or turbine/boiler controls, static voltampere-reactive compensators (SVC), flexible ac transmission systems (FACTS), high-voltage dc (HVdc) transmission systems, circuit breaker mechanisms, or other facility control systems are not operations of a Protection System. The standard is not applicable to non-protective functions such as automation (e.g., data collection) or control functions that are embedded within a Protection System.

Control Functions

The entity must make a determination as to whether the standard is applicable to each operation of its Protection System in accordance with the provided exclusions in the standard's Applicability, see Section 4.2.1. The subject matter experts (SME) developing this standard recognize that entities use Protection Systems as part of a routine practice to control BES Elements. This standard is not applicable to operation of protective functions within a Protection System when intended for controlling a BES Element as a part of an entity's process or planned switching sequence. The following are examples of conditions to which this standard is not applicable:

> **Example 8a:** The reverse power protective function that operates to remove a generating unit from service using the entity's normal or routine process.
>
> **Example 8b:** The reverse power relay enables a permissive trip and the generator operator trips the unit.

The standard is not applicable to operation of the protective relay because its operation is intended as a control function as part of a controlled shutdown sequence for the generator. However, the standard remains applicable to operation of the reverse power relay when it operates for conditions not associated with the controlled shutdown sequence, such as a motoring condition caused by a trip of the prime mover.

The following is another example of a condition to which this standard is not applicable:

> **Example 8c:** Operation of a capacitor bank interrupting device for voltage control using functions embedded within a microprocessor based relay that is part of a Protection System.

The above are examples only, and do not constitute an all-inclusive list to which the standard is not applicable.

Extenuating Circumstances

In the event of a natural disaster or other extenuating circumstances, the December 20, 2012 Sanction Guidelines of the North American Electric Reliability Corporation, Section 2.8, Extenuating Circumstances, reads: "In unique extenuating circumstances causing or contributing to the violation, such as significant natural disasters, NERC or the Regional Entity may significantly reduce or eliminate Penalties." The Regional Entities to whom NERC has delegated

authority will consider extenuating circumstances when considering any sanctions in relation to the timelines outlined in this standard.

The volume of Protection System operations tend to be sporadic. If a high rate of Protection System operations is not sustained, utilities will have an opportunity to catch up within the 120 day period.

Requirement Time Periods

The time periods within all the Requirements are distinct and separate. The applicable entity in Requirement R1 has 120 calendar days to identify whether a BES interrupting device operation is a Misoperation. Once the applicable entity has identified a Misoperation, it has completed its performance under Requirement R1. Identified Misoperations without an identified cause become subject to Requirement R4 and any subsequent Requirements as necessary. Identified Misoperations with an identified cause become subject to Requirement R5 and any subsequent Requirements as necessary.

In Requirement R2, the applicable entity has 120 calendar days, based on the date of the BES interrupting device operation, to provide notification to the other Protection System owners that meet the circumstances in Parts 2.1 and 2.2. For the case of an applicable entity that was notified (R3), it has the later of 120 calendar days from the date of the BES interrupting device operation or 60 calendar days of notification to identify whether its Protection System components caused a Misoperation.

Once a Misoperation is identified in either Requirement R1 or R3, and the applicable entity did not identify the cause(s) of the Misoperation, the time period for performing at least one investigative action every two full calendar quarters begins. The time period(s) in Requirement R4 resets upon each period. When the applicable entity's investigative actions identify the cause of the identified Misoperation or the applicable entity declares that no cause was found, the applicable entity has completed its performance in Requirement R4.

The time period in Requirement R5 begins when the Misoperation cause is first identified. The applicable entity is allotted 60 calendar days to perform one of the two activities listed in Requirement R5 (e.g., CAP or declaration) to complete its performance under Requirement R5.

Requirement R6 time period is determined by the actions and the associated timetable to complete those actions identified in the CAP. The time periods contained in the CAP may change from time to time and the applicable entity is required to update the timetable when it changes.

Time periods provided in the Requirements are intended to provide a reasonable amount of time to perform each Requirement. Performing activities in the least amount of time facilitates prompt identification of Misoperations, notification to other Protection System owners, identification of the cause(s), correction of the cause(s), and that important information is retained that may be lost due to time.

Requirement R1

This Requirement initiates a review of each BES interrupting device operation to identify whether or not a Misoperation may have occurred. Since the BES interrupting device owner typically monitors and tracks device operations, the owner is the logical starting point for identifying Misoperations of Protection Systems for BES Elements. A review is required when (1) a BES interrupting device operates that is caused by a Protection System or by manual intervention in response to a Protection System failure to operate, (2) regardless of whether the owner owns all or part of the Protection System component(s), and (3) the owner identified its Protection System component(s) as causing the BES interrupting device operation or was caused by manual intervention in response to its Protection System failure to operate.

Since most Misoperations result in the operation of one or more BES interrupting devices, these operations initiate a review to identify any Misoperation. If an Element is manually isolated in response to a failure to operate, the manual isolation of the Element triggers a review for Misoperation.

> **Example R1a:** The failure of a loss of field relay on a generating unit where an operator takes action to isolate the unit.

Manual intervention may indicate a Misoperation has occurred, thus requiring the initiation of an investigation by the BES interrupting device owner.

For the case where a BES interrupting device did not operate and remote clearing occurs due to the failure of a Composite Protection System to operate, the BES interrupting device owner would still review the operation under Requirement R1. However, if the BES interrupting device owner determines that its Protection System component operated as backup protection for a condition on another entity's BES Element, the owner would provide notification of the operation to the other Protection System owner(s) under Requirement R2, Part 2.2.

Protection Systems are made of many components. These components may be owned by different entities. For example, a Generator Owner may own a current transformer that sends information to a Transmission Owner's differential relay. All of these components and many more are part of a Protection System. It is expected that all of the owners will communicate with each other, sharing information freely, so that Protection System operations can be analyzed, Misoperations identified, and corrective actions taken.

Each entity is expected to use judgment to identify those Protection System operations that meet the definition of Misoperation regardless of the level of ownership. A combination of available information from resources such as counters, relay targets, Supervisory Control and Data Acquisition (SCADA) systems, or DME would typically be used to determine whether or not a Misoperation occurred. The intent of the standard is to classify an operation as a Misoperation if the available information leads to that conclusion. In many cases, it will not be necessary to leverage all available data to determine whether or not a Misoperation occurred. The standard also allows an entity to classify an operation as a Misoperation if entity is not sure. The entity may decide to identify the operation as a Misoperation to satisfy Requirement R1 and continue its investigation for a cause of the Misoperation under Requirement R4. If the continued investigative actions are inconclusive, the entity may declare no cause found and end its investigation. The entity is allotted 120 calendar days from the date of its BES interrupting device operation to identify whether its Protection System component(s) caused a Misoperation.

The Protection System operation may be documented in a variety of ways such as in a report, database, spreadsheet, or list. The documentation may be organized in a variety of ways such as by BES interrupting device, protected Element, or Composite Protection System.

Repeated operations which occur during the same automatic reclosing sequence do not need a separate identification under Requirement R1. Repeated Misoperations which occur during the same 24-hour period do not need a separate identification under Requirement R1. This is consistent with the NERC *Misoperations Report*[8] which states:

> "In order to avoid skewing the data with these repeated events, the NERC SPCS should clarify, in the next annual update of the misoperation template, that all misoperations due to the same equipment and cause within a 24 hour period be recorded as one misoperation."

The following is an example of a condition that is not a Misoperation.

> **Example R1b:** A high impedance Fault occurs within a transformer. The sudden pressure relaying detects and operates for the Fault, but the differential relaying did not operate due to the low Fault current levels. This is not a Misoperation because the Composite Protection System was not required to operate because the Fault was cleared by the sudden pressure relay.

Requirement R2

Requirement R2 ensures notification of those who have a role in identifying Misoperations, but were not accounted for within Requirement R1. In the case of multi-entity ownership, the entity that owns the BES interrupting device that operated is expected to use judgment to identify those Protection System operations that meet the definition of Misoperation under Requirement R1; however, if the entity that owns a BES interrupting device determines that its Protection System component(s) did not cause the BES interrupting device(s) operation or cannot determine whether its Protection System components caused the BES interrupting device(s) operation, it must notify the other Protection System owner(s) that share Misoperation identification responsibility when the criteria in Requirement R2 is met.

This Requirement does not preclude the Protection System owners from initially communicating and working together to determine whether a Misoperation occurred and, if so, the cause. The BES interrupting device owner is only required to officially notify the other owners when it: (1) shares the Composite Protection System ownership with other entity(ies), (2) determines that a Misoperation occurred or cannot rule out a Misoperation, and (3) determines its Protection System component(s) did not cause a Misoperation or is unsure. Officially notifying the other owners without performing a preliminary review may unnecessarily burden the other owners with compliance obligations under Requirement R3, redirect valuable resources, and add little benefit to reliability. The BES interrupting device owner should officially notify other owners when appropriate within the established time period.

[8] "Misoperations Report." Reporting Multiple Occurrences. NERC Protection System Misoperations Task Force. http://www.nerc.com/docs/pc/psmtf/PSMTF_Report.pdf. April 1, 2013. pg. 37 of 40.

The following is an example of a notification to another Protection System owner:

> **Example R2a:** Circuit breakers A and B at the Charlie station tripped from directional comparison blocking (DCB) relaying on 03/03/2014 at 15:43 UTC during an external Fault. As discussed last week, the fault records indicate that a problem with your equipment (failure to transmit) caused the operation.
>
> **Example R2b:** A generator unit tripped out immediately upon synchronizing to the grid due to a Misoperation of its overcurrent protection. The Transmission Owner owns the 230 kV generator breaker that operated. The Transmission Owner, as the owner of the BES interrupting device after determining that its Protection System components did not cause the Misoperation, notified the Generator Owner of the operation. The Generator Owner investigated and determined that its Protection System components caused the Misoperation. In this example, the Generator Owner's Protection System components did cause the Misoperation. As the owner of the Protection System components that caused the Misoperation, the Generator Owner is responsible for creating and implementing the CAP.

A Composite Protection System owned by different functional entities within the same registered entity does not necessarily satisfy the notification criteria in Part 2.1.1 of Requirement R2. For example, if the same personnel within a registered entity perform the Misoperation identification for both the Generator Owner and Transmission Owner functions, then the Misoperation identification would be completely covered in Requirement R1, and therefore notification would not be required. However, if the Misoperation identification is handled by different groups, then notification would be required because the Misoperation identification would not necessarily be covered in Requirement R1.

> **Example R2c:** Line A Composite Protection System (owned by entity 1) failed to operate for an internal Fault. As a result, the zone 3 portion of Line B's Composite Protection System (owned by entity 2) and zone 3 portion of Line C's Composite Protection System (owned by entity 3) operated to clear the Fault. Entity 2 and 3 notified entity 1 of the remote zone 3 operation.

For the case where a BES interrupting device operates to provide backup protection for a non-BES Element, the entity reviewing the operation is not required to notify the other owners of Protection Systems for non-BES Elements. No notification is required because this Reliability Standard is not applicable to Protection Systems for non-BES Elements.

Requirement R3

For Requirement R3 (i.e., notification received), the entity that also owns a portion of the Composite Protection System is expected to use judgment to identify whether the Protection System operation is a Misoperation. A combination of available information from resources such as counters, relay targets, SCADA, DME, and information from the other owner(s) would typically be used to determine whether or not a Misoperation occurred. The intent of the standard is to classify an operation as a Misoperation if the available information leads to that conclusion. In many cases, it will not be necessary to leverage all available data to determine whether or not a Misoperation occurred. The standard also allows an entity to classify an operation as a Misoperation if an entity is not sure. The entity may decide to identify the operation as a

Misoperation to satisfy Requirement R1 and continue its investigation for a cause of the Misoperation under Requirement R4. If the continued investigative actions are inconclusive, the entity may declare no cause found and end its investigation.

The entity that is notified by the BES interrupting device owner is allotted the later of 60 calendar days from receipt of notification or 120 calendar days from the BES interrupting device operation date to determine if its portion of the Composite Protection System caused the Protection System operation. It is expected that in most cases of a jointly owned Protection System, the entity making notification would have been in communication with the other owner(s) early in the process. This means that the shorter 60 calendar days only comes into play if the notification occurs in the second half of the 120 calendar days allotted to the BES interrupting device owner in Requirement R1.

The Protection System review may be organized in a variety of ways such as in a report, database, spreadsheet, or list. The documentation may be organized in a variety of ways such as by BES interrupting device, protected Element, or Composite Protection System. The BES interrupting device owner's notification received may be documented in a variety of ways such as an email or a facsimile.

Requirement R4

The entity in Requirement R4 (i.e., cause identification), whether it is the entity that owns the BES interrupting device or an entity that was notified, is expected to use due diligence in taking investigative action(s) to determine the cause(s) of an identified Misoperation for its portion of the Composite Protection System. The SMEs developing this standard recognize there will be cases where the cause(s) of a Misoperation will not be revealed during the allotted time periods in Requirements R1 or R3; therefore, Requirement R4 provides the entity a mechanism to continue its investigative work to determine the cause(s) of the Misoperation when the cause is not known.

A combination of available information from resources such as counters, relay targets, SCADA, DME, test results, and studies would typically be used to determine the cause of the Misoperation. At least one investigative action must be performed every two full calendar quarters until the investigation is completed.

The following is an example of investigative actions taken to determine the cause of an identified Misoperation:

> **Example R4a**: A Misoperation was identified on 03/18/2014. A line outage to test the Protection System was scheduled on 03/24/2014 for 12/15/2014 as the first investigative action (i.e., beyond the next two full calendar quarters) due to summer peak conditions. The protection engineer contacted the manufacturer on 04/10/2014 (i.e., within two full calendar quarters) to obtain any known issues. The engineer reviewed manufacturer's documents on 05/27/2014. The outage schedule was confirmed on 08/29/2014 and was taken on 12/15/2014. Testing was completed on 12/16/2014 (i.e., in the second two full quarters) revealing the microprocessor relay as the cause of the Misoperation. A CAP is being developed to replace the relay.

Periodic action minimizes compliance burdens and focuses the entity's effort on determining the cause(s) of the Misoperation while providing measurable evidence. The SMEs recognize that

certain planned investigative actions may require months or years to schedule and complete; therefore, the entity is only required to perform at least one investigative action every two full calendar quarters. If an investigative action is performed in the first quarter of a calendar year, the next investigative action would need to be performed by the end of the third calendar quarter. If an investigative action is performed in the last quarter of a calendar year, the next investigative action would need to be performed by the end of the second calendar quarter of the following calendar year. Investigative actions may include a variety of actions, such as reviewing DME records, performing or reviewing studies, completing relay calibration or testing, requesting manufacturer review, requesting an outage, or confirming a schedule.

The entity's investigation is complete when it identifies the cause of the Misoperation or makes a declaration that no cause was determined. The declaration is intended to be used if the entity determines that investigative actions have been exhausted or have not provided direction for identifying the Misoperation cause. Historically, approximately 12% of Misoperations are unknown or unexplainable.[9]

Although the entity only has to document its specific investigative actions taken to determine the cause(s) of an identified Misoperation, the entity should consider the benefits of formally organizing (e.g., in a report or database) its actions and findings. Well documented investigative actions and findings may be helpful in future investigations of a similar event or circumstances. A thorough report or database may contain a detailed description of the event, information gathered, investigative actions, findings, possible causes, identified causes, and conclusions. Multiple owners of a Composite Protection System might consider working together to produce a common report for their mutual benefit.

The following are examples of a declaration where no cause was determined:

> **Example R4b**: A Misoperation was identified on 04/11/2014. All relays at station A and B functioned properly during testing on 08/26/2014 as the first investigative action. The carrier system functioned properly during testing on 08/27/2014. The carrier coupling equipment functioned properly during testing on 08/28/2014. A settings review completed on 09/03/2014 indicated the relay settings were proper. Since the equipment involved in the operation functioned properly during testing, the settings were reviewed and found to be correct, and the equipment at station A and station B is already monitored. The investigation is being closed because no cause was found.
>
> **Example R4c:** A Misoperation was identified on 03/22/2014. The protection scheme was replaced before the cause was identified. The power line carrier or PLC based protection was replaced with fiber-optic based protection with an in-service date of 04/16/2014. The new system will be monitored for recurrence of the Misoperation.

Requirement R5

Resolving the causes of Protection System Misoperations benefits BES reliability by preventing recurrence. The Corrective Action Plan (CAP) is an established tool for resolving operational problems. The NERC Glossary defines a Corrective Action Plan as, *"A list of actions and an*

[9] NERC System Protection and Control Subcommittee. Misoperations Report. April 1, 2013: http://www.nerc.com/docs/pc/psmtf/PSMTF_Report.pdf. Figure 15: NERC Wide Misoperations by Cause Code. pg. 22 of 40.

associated timetable for implementation to remedy a specific problem." Since a CAP addresses specific problems, the determination of what went wrong needs to be completed before developing a CAP. When the Misoperation cause is identified in Requirement R1, R3 or R4, Requirement R5 requires Protection System owner(s) to develop a CAP, or explain why corrective actions are beyond the entity's control or would not improve BES reliability. The entity must develop the CAP or make a declaration why additional actions are beyond the entity's control or would not improve BES reliability and that no further corrective actions will be taken within 60 calendar days of first determining a cause.

The SMEs developing this standard recognize there may be multiple causes for a Misoperation. In these circumstances, the CAP would include a remedy for the identified causes. The CAP may be revised if additional causes are found; therefore, the entity has the option to create a single or multiple CAP(s) to correct multiple causes of a Misoperation. The 60 calendar day period for developing a CAP (or declaration) is established on the basis of industry experience which includes operational coordination timeframes, time to consider alternative solutions, coordination of resources, and development of a schedule.

The development of a CAP is intended to document the specific corrective actions needed to be taken to prevent Misoperation recurrence, the timetable for executing such actions, and an evaluation of the CAP's applicability to the entity's other Protection Systems including other locations. The evaluation of these other Protection Systems aims to reduce the risk and likelihood of similar Misoperations in other Protection Systems. The Protection System owner is responsible for determining the extent of its evaluation concerning other Protection Systems and locations. The evaluation may result in the owner including actions to address Protection Systems at other locations or the reasoning for not taking any action. The CAP and an evaluation of other Protection Systems including other locations must be developed to complete Requirement R5.

The following is an example of a CAP for a relay Misoperation that was applying a standing trip due to a failed capacitor within the relay and the evaluation of the cause at similar locations which determined capacitor replacement was not necessary.

For completion of each CAP in Examples R5a through R5d, please see Examples R6a through R6d.

> **Example R5a:** Actions: Remove the relay from service. Replace capacitor in the relay. Test the relay. Return to service or replace by 07/01/2014.
>
> Applicability to other Protection Systems: This type of impedance relay has not been experiencing problems and is systematically being replaced with microprocessor relays as Protection Systems are modernized. Therefore, it was assessed that a program for wholesale preemptive replacement of capacitors in this type of impedance relay does not need to be established for the system.

The following is an example of a CAP for a relay Misoperation that was applying a standing trip due to a failed capacitor within the relay and the evaluation of the cause at similar locations which determined the capacitors need preemptive correction action.

> **Example R5b:** Actions: Remove the relay from service. Replace capacitor in the relay. Test the relay. Return to service or replace by 07/01/2014.
>
> Applicability to other Protection Systems: This type of impedance relay is suspected to have previously tripped at other locations because of the same type of capacitor issue. Based on the evaluation, a program should be established by 12/01/2014 for wholesale preemptive replacement of capacitors in this type of impedance relay.

The following is an example of a CAP for a relay Misoperation that was applying a standing trip due to a failed capacitor within the relay and the evaluation of the cause at similar locations which determined the capacitors need preemptive correction action.

> **Example R5c:** Actions: Remove the relay from service. Replace capacitor in the relay. Test the relay. Return to service or replace by 07/01/2014.
>
> Applicability to other Protection Systems: This type of impedance relay is suspected to have previously tripped at other locations because of the same type of capacitor issue. Based on the evaluation, the preemptive replacement of capacitors in this type of impedance relay should be pursued for the identified stations A through I by 04/30/2015.
>
> A plan is being developed to replace the impedance relay capacitors at stations A, B, and C by 09/01/2014. A second plan is being developed to replace the impedance relay capacitors at stations D, E, and F by 11/01/2014. The last plan will replace the impedance relay capacitors at stations G, H, and I by 02/01/2015.

The following is an example of a CAP for a relay Misoperation that was due to a version 2 firmware problem and the evaluation of the cause at similar locations which determined the firmware needs preemptive correction action.

> **Example R5d:** Actions: Provide the manufacturer fault records. Install new firmware pending manufacturer results by 10/01/2014.
>
> Applicability to other Protection Systems: Based on the evaluation of other locations and a risk assessment, the newer firmware version 3 should be installed at all installations that are identified to be version 2. Twelve relays were identified across the system. Proposed completion date is 12/31/2014.

The following are examples of a declaration made where corrective actions are beyond the entity's control or would not improve BES reliability and that no further corrective actions will be taken.

> **Example R5e:** The cause of the Misoperation was due to a non-registered entity communications provider problem.
>
> **Example R5f:** The cause of the Misoperation was due to a transmission transformer tapped industrial customer who initiated a direct transfer trip to a registered entity's transmission breaker.

In situations where a Misoperation cause emanates from a non-registered outside entity, there may be limited influence an entity can exert on an outside entity and is considered outside of an entity's control.

The following are examples of declarations made why corrective actions would not improve BES reliability.

> **Example R5g:** The investigation showed that the Misoperation occurred due to transients associated with energizing transformer ABC at Station Y. Studies show that de-sensitizing the relay to the recorded transients may cause the relay to fail to operate as intended during power system oscillations.
>
> **Example R5h:** As a result of an operation that left a portion of the power system in an electrical island condition, circuit XYZ within that island tripped, resulting in loss of load within the island. Subsequent investigation showed an overfrequency condition persisted after the formation of that island and the XYZ line protective relay operated. Since this relay was operating outside of its designed frequency range and would not be subject to this condition when line XYZ is operated normally connected to the BES, no corrective action will be taken because BES reliability would not be improved.
>
> **Example R5i:** During a major ice storm, four of six circuits were lost at Station A. Subsequent to the loss of these circuits, a skywire (i.e., shield wire) broke near station A on line AB (between Station A and B) resulting in a phase-phase Fault. The protection scheme utilized for both protection groups is a permissive overreaching transfer trip (POTT). The Line AB protection at Station B tripped timed for this event (i.e., Slow Trip – During Fault) even though this line had been identified as requiring high speed clearing. A weak infeed condition was created at Station A due to the loss of 4 transmission circuits resulting in the absence of a permissive signal on Line AB from Station A during this Fault. No corrective action will be taken for this Misoperation as even under N-1 conditions, there is normally enough infeed at Station A to send a proper permissive signal to station B. Any changes to the protection scheme to account for this would not improve BES reliability.

A declaration why corrective actions are beyond the entity's control or would not improve BES reliability should include the Misoperation cause and the justification for taking no corrective action. Furthermore, a declaration that no further corrective actions will be taken is expected to be used sparingly.

Requirement R6

To achieve the stated purpose of this standard, which is to identify and correct the causes of Misoperations of Protection Systems for BES Elements, the responsible entity is required to implement a CAP that addresses the specific problem (i.e., cause(s) of the Misoperation) through completion. Protection System owners are required in the implementation of a CAP to update it when actions or timetable change, until completed. Accomplishing this objective is intended to reduce the occurrence of future Misoperations of a similar nature, thereby improving reliability and minimizing risk to the BES.

The following is an example of a completed CAP for a relay Misoperation that was applying a standing trip (See also, Example R5a).

> **Example R6a:** Actions: The impedance relay was removed from service on 06/02/2014 because it was applying a standing trip. A failed capacitor was found within the impedance relay and replaced. The impedance relay functioned properly during testing after the capacitor was replaced. The impedance relay was returned to service on 06/05/2014.
>
> CAP completed on 06/25/2014.

The following is an example of a completed CAP for a relay Misoperation that was applying a standing trip that resulted in the correction and the establishment of a program for further replacements (See also, Example R5b).

> **Example R6b:** Actions: The impedance relay was removed from service on 06/02/2014 because it was applying a standing trip. A failed capacitor was found within the impedance relay and replaced. The impedance relay functioned properly during testing after the capacitor was replaced. The impedance relay was returned to service on 06/05/2014.
>
> A program for wholesale preemptive replacement of capacitors in this type of impedance relay was established on 10/28/2014.
>
> CAP completed on 10/28/2014.

The following is an example of a completed CAP of corrective actions with a timetable that required updating for a failed relay and preemptive actions for similar installations (See also, Example R5c).

> **Example R6c:** Actions: The impedance relay was removed from service on 06/02/2014 because it was applying a standing trip. A failed capacitor was found within the impedance relay and replaced. The impedance relay functioned properly during testing after the capacitor was replaced. The impedance relay was returned to service on 06/05/2014.
>
> The impedance relay capacitor replacement was completed at stations A, B, and C on 08/16/2014. The impedance relay capacitor replacement was completed at stations D, E, and F on 10/24/2014. The impedance relay capacitor replacement for stations G, H, and I were postponed due to resource rescheduling from a scheduled 02/01/15 completion to 04/01/2015 completion. Capacitor replacement was completed on 03/09/2015 at stations G, H, and I. All stations identified in the evaluation have been completed.
>
> CAP completed on 03/09/2015.

The following is an example of a completed CAP for corrective actions with updated actions for a firmware problem and preemptive actions for similar installations. (See also, Example R5d).

> **Example R6d:** Actions: fault records were provided to the manufacturer on 06/04/2014. The manufacturer responded that the Misoperation was caused by a bug in version 2 firmware, and recommended installing version 3 firmware. Version 3 firmware was installed on 08/12/2014.
>
> Nine of the twelve relays were updated to version 3 firmware on 09/23/2014. The manufacturer provided a subsequent update which was determined to be beneficial for the remaining relays. The remaining three of twelve relays identified as having the version 2 firmware were updated to version 3.01 firmware on 11/10/2014.
>
> CAP completed on 11/10/2014.

The CAP is complete when all of the actions identified within the CAP have been completed.

Process Flow Chart: Below is a graphical representation demonstrating the relationships between Requirements:

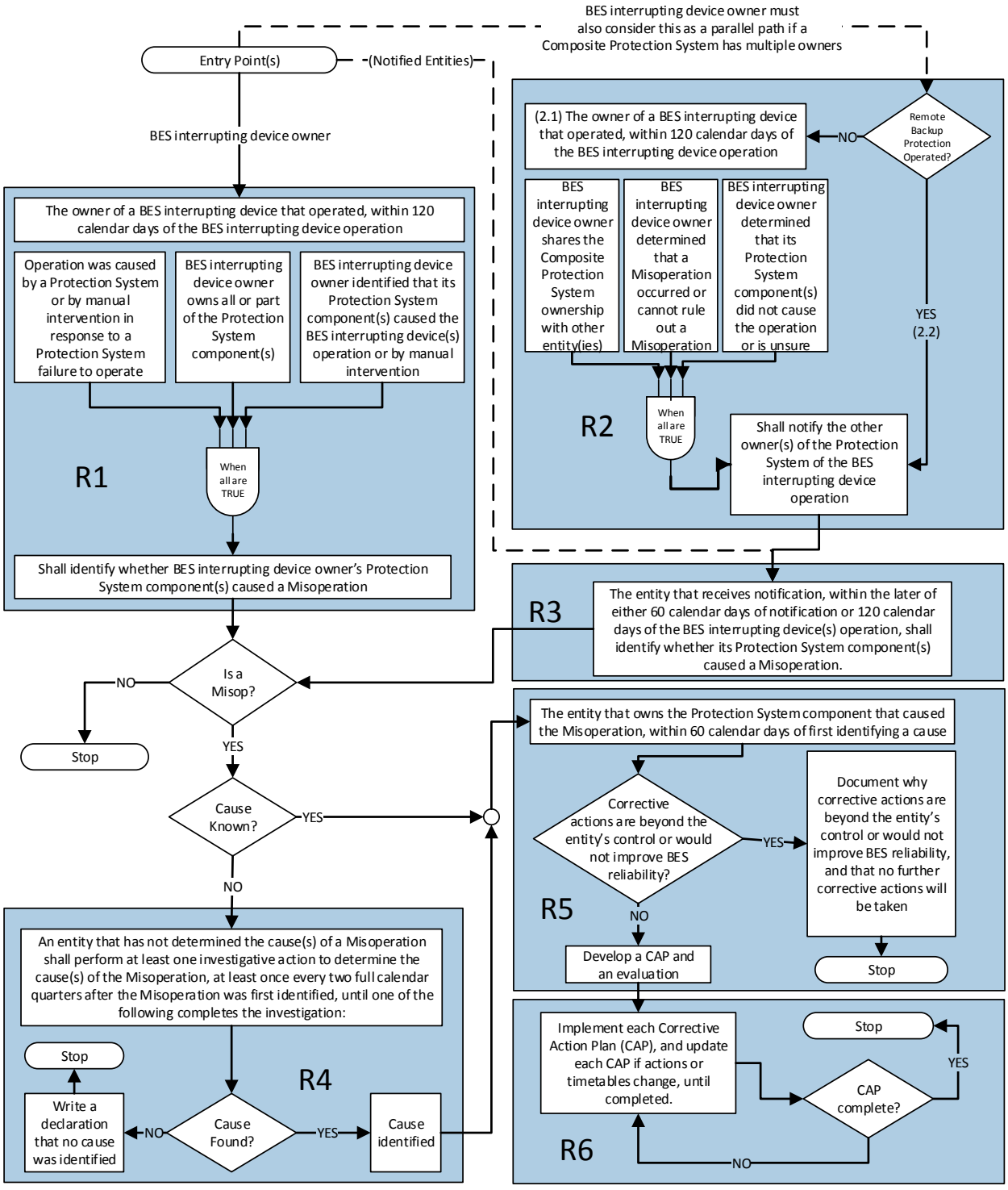

Rationale

During development of this standard, text boxes were embedded within the standard to explain the rationale for various parts of the standard. Upon BOT approval, the text from the rationale text boxes was moved to this section.

Rationale for Introduction

The only revisions made to version of PRC-004-4 are revisions to section 4.2 Facilities to clarify applicability of the Requirements of the standard at generator Facilities. These applicability revisions are intended to clarify and provide for consistent application of the Requirements to BES generator Facilities included in the BES through Inclusion I4 – Dispersed Power Producing Resources.

Rationale for Applicability

Misoperations occurring on the Protection Systems of individual generation resources identified under Inclusion I4 of the BES definition do not have a material impact on BES reliability when considered individually; however, the aggregate capability of these resources may impact BES reliability if a number of Protection Systems on the individual power producing resources incorrectly operated or failed to operate as designed during a system event. To recognize the potential for the Protection Systems of individual power producing resources to affect the reliability of the BES, 4.2.1.5 of the Facilities section reflects the threshold consistent with the revised BES definition. See FERC Order Approving Revised Definition, P 20, Docket No. RD14-2-000. The intent of 4.2.1.5 of the Facilities section is to exclude from the standard requirements these Protection Systems for “common- mode failure” type scenarios affecting less than or equal to 75 MVA aggregated nameplate generating capability at these dispersed generating facilities.

Standard Development Timeline

This section is maintained by the drafting team during the development of the standard and will be removed when the standard becomes effective.

Development Steps Completed

1. NERC Board of Trustees ("Board") adopted PRC-004-4 and PRC-010-1 and retired PRC-022-1 on November 12, 2014.
2. NERC Standards Committee approved initial posting of the standard on February 18, 2015

Description of Current Draft

The UVLSSDT is posting Draft 1 of PRC-004-5 – Protection System Misoperation Identification and Correction for a 45-day initial formal comment period and concurrent/parallel initial ballot in the last ten days of the comment period. The draft contains revisions to the Applicability section to address UVLS equipment.

Anticipated Actions	Date
45-day formal comment period with ballot	February 2015
10-day final ballot	April 2015
Board adoption	May 2015

Project Development Background

The undervoltage load shedding (UVLS) standard drafting team (SDT) was tasked with addressing Misoperation of UVLS equipment during the development of version one of PRC-010 and version three of PRC-004 in Project 2010-05.1 (i.e., Misoperation). This project has been named phase 2 of Project 2008-02 (i.e., UVLS) for clarity purposes. Each SDT for these two projects outlined work necessary to address Misoperation of UVLS equipment. This work was deferred, at the time, because both PRC-010-1 and PRC-004-3 contained dependencies with other projects requiring their completion. This phase two is a continuation of the work performed under the Standards Authorization Request (SAR) for Project 2008-02.

The revisions proposed in Reliability Standard PRC-010-2 meet the following objectives:

- Address the UVLS Misoperation the remaining work due to the retirement of PRC-022-1 (*Undervoltage Load Shedding Program Performance*) during the development of PRC-010-1 (*Undervoltage Load Shedding*)
- Ensure UVLS equipment (i.e., operation or non-operation) within the UVLS Program is assessed and mitigated

Basis for Revision

Originally, Misoperation of UVLS equipment was planned to be appended to a future version of PRC-004 (*Protection System Misoperation Identification and Correction*). The SDT is proposing a two-prong approach by revising both PRC-004 and PRC-010 to address the concern of identifying Misoperations of UVLS equipment in PRC-022-1.

First, the SDT proposes an addition to the Applicability section of PRC-004 to include UVLS that is intended to trip one or more Bulk Electric System (BES) Elements. This is consistent with previous communication to industry about addressing Misoperation of UVLS equipment.[1] Entities will be required to address UVLS that trips a BES Element similarly to other Protection Systems in PRC-004. While the revision to PRC-004 consistent with the communicated approach, the SDT determined that the proposed revision fails to address the performance (operation or non-operations) of UVLS Program equipment not covered by the strict processes of PRC-004.

Second, the SDT is proposing clarifying revisions in PRC-010-2, Requirements R4 and R5 to address UVLS Program equipment performance. These revisions are not requiring UVLS entities to address UVLS protective relays not covered by the strict processes of PRC-004; however, PRC-010-2 is requiring UVLS entities to address the deficiencies (e.g., Misoperations) identified in the assessment performed by Planning Coordinator or Transmission Planner in Requirement R4. Deficiencies include the performance (operation or non-operation) issues of UVLS Program equipment. These deficiencies, if any, are addressed by the UVLS entities through a Corrective Action Plan (CAP) developed in Requirement R5 and executed by the UVLS entities in Requirement R2 of PRC-010.

The term "Misoperation" as defined by the *Glossary of Terms Used in NERC Reliability Standards* is not used within the Requirements of PRC-010; however, the term is used in the Guidelines and Technical Basis section of the standard to provide clarity that UVLS Program equipment deficiencies include Misoperations that are to be corrected by UVLS entities. The PRC-010-2 Reliability Standard mandates that UVLS entities are to correct the deficiencies identified by the Planning Coordinator or Transmission Planner, such as Misoperation of UVLS equipment. Deficiencies are identified through either the periodic assessment or an assessment performed following an event and included in a CAP to the UVLS entity. The structure used by the SDT allows the Planning Coordinator and Transmission Planner to assess UVLS equipment for Misoperation under PRC-010 rather than the Generator Owner, Transmission Owner, and Distribution Provider applicable to the strict processes of PRC-004.

The two-pronged approach ensures that any UVLS Program equipment containing a deficiency is identified and corrected under PRC-010 and UVLS that trips a BES Element under is corrected under PRC-004 to address the requirements in the retired PRC-022-1.

[1] Refer to Implementation Plan for PRC-010-1 (http://www.nerc.com/pa/stand/Pages/PRC0101RI.aspx) and PRC-010-1 (http://www.nerc.com/pa/Stand/Pages/ReliabilityStandards.aspx), Introduction in the Guidelines and Technical Basis, last paragraph.

A. Introduction

1. **Title: Protection System Misoperation Identification and Correction**

2. **Number:** PRC-004-45

3. **Purpose:** Identify and correct the causes of Misoperations of Protection Systems for Bulk Electric System (BES) Elements.

4. **Applicability:**

   4.1. Functional Entities:

   4.1.1 Transmission Owner

   4.1.2 Generator Owner

   4.1.3 Distribution Provider

   4.2. Facilities:

   4.2.1 Protection Systems for BES Elements, with the following exclusions:

   4.2.1.1 Non-protective functions that are embedded within a Protection System.

   4.2.1.2 Protective functions intended to operate as a control function during switching.[2]

   4.2.1.3 Special Protection Systems (SPS).

   4.2.1.4 Remedial Action Schemes (RAS).

   4.2.1.5 Protection Systems of individual dispersed power producing resources identified under Inclusion I4 of the BES definition where the Misoperations affected an aggregate nameplate rating of less than or equal to 75 MVA of BES Facilities.

   4.2.2 Underfrequency load shedding (UFLS) that is intended to trip one or more BES Elements.

   4.2.3 Undervoltage load shedding (UVLS) that is intended to trip one or more BES Elements.

5. **Effective Dates:Date:** See theProject 2008-02.2 Implementation Plan for this Standard..

5. **Background:**

A key factor for BES reliability is the correct performance of Protection Systems. The monitoring of Protection System events for BES Elements, as well as identifying and correcting the causes of Misoperations, will improve Protection System performance. This Reliability Standard PRC-004-3 – Protection System Misoperation Identification and Correction is a revision of PRC-004-2.1a – Analysis and Mitigation of Transmission and Generation Protection System Misoperations. The Reliability Standard PRC-003-1 – Regional Procedure for Analysis of Misoperations of Transmission and Generation

[2] For additional information and examples, see the "Non-Protective Functions" and "Control Functions" sections in the Application Guidelines.

Protection Systems requires Regional Entities to establish procedures for analysis of Misoperations. In the FERC Order No. 693, the Commission identified PRC-003-0 as a "fill-in-the-blank" standard. The Order stated that because the regional procedures had not been submitted, the Commission proposed not to approve or remand PRC-003-0. Because PRC-003-0 (now PRC-003-1) is not enforceable, there is not a mandatory requirement for Regional Entity procedures to support the Requirements of PRC-004-2.1a. This is a potential reliability gap; consequently, PRC-004-3 combines the reliability intent of the two legacy standards PRC-003-1 and PRC-004-2.1a.

This project includes revising the existing definition of Misoperation, which reads:

Misoperation

- Any failure of a Protection System element to operate within the specified time when a fault or abnormal condition occurs within a zone of protection.
- Any operation for a fault not within a zone of protection (other than operation as backup protection for a fault in an adjacent zone that is not cleared within a specified time for the protection for that zone).
- Any unintentional Protection System operation when no fault or other abnormal condition has occurred unrelated to on-site maintenance and testing activity.

In general, this definition needed more specificity and clarity. The terms "specified time" and "abnormal condition" are ambiguous. In the third bullet, more clarification is needed as to whether an unintentional Protection System operation for an atypical, yet explainable, condition is a Misoperation.

The SAR for this project also included clarifying reporting requirements. Misoperation data, as currently collected and reported, is not optimal to establish consistent metrics for measuring Protection System performance. As such, the data reporting obligation for this standard is being removed and is being developed under the NERC Rules of Procedure, Section 1600 – Request for Data or Information ("data request"). As a result of the data request, NERC will analyze the data to: develop meaningful metrics; identify trends in Protection System performance that negatively impact reliability; identify remediation techniques; and publicize lessons learned for the industry. The removal of the data collection obligation from the standard does not result in a reduction of reliability. The standard and data request have been developed in a manner such that evidence used for compliance with the standard and data request are intended to be independent of each other.

The proposed Requirements of the revised Reliability Standard PRC-004-3 meet the following objectives:

- Review all Protection System operations on the BES to identify those that are Misoperations of Protection Systems for Facilities that are part of the BES.
- Analyze Misoperations of Protection Systems for Facilities that are part of the BES to identify the cause(s).

- ~~Develop and implement Corrective Action Plans to address the cause(s) of Misoperations of Protection Systems for Facilities that are part of the BES.~~

~~Misoperations associated with Special Protection Schemes (SPS) and Remedial Action Schemes (RAS) are not addressed in this standard due to their inherent complexities. NERC plans to handle SPS and RAS in the second phase of this project.~~

~~The Western Electric Coordinating Council (WECC) Regional Reliability Standard PRC-004-WECC-1 – Protection System and Remedial Action Scheme Misoperation relates to the reporting of Misoperations of Protection Systems and RAS for a limited set of WECC Paths. The WECC region plans to conduct work to harmonize the regional standard with this continent-wide proposed standard and the second phase of this project concerning SPS and RAS.~~

~~Undervoltage load shedding (UVLS) has not been included in this standard's applicability because Misoperations of UVLS relays are currently addressed by Reliability Standard PRC-022-1 – Under-Voltage Load Shedding Program Performance, Requirement R1.5. Underfrequency load shedding (UFLS) was added to PRC-004-3 to close a gap in reliability as Misoperations of UFLS relays are not covered by a Reliability Standard currently.~~

B. Requirements and Measures

R1. Each Transmission Owner, Generator Owner, and Distribution Provider that owns a BES interrupting device that operated under the circumstances in Parts 1.1 through 1.3 shall, within 120 calendar days of the BES interrupting device operation, identify whether its Protection System component(s) caused a Misoperation: *[Violation Risk Factor: Medium][Time Horizon: Operations Assessment, Operations Planning]*

1.1 The BES interrupting device operation was caused by a Protection System or by manual intervention in response to a Protection System failure to operate; and

1.2 The BES interrupting device owner owns all or part of the Composite Protection System; and

1.3 The BES interrupting device owner identified that its Protection System component(s) caused the BES interrupting device(s) operation or was caused by manual intervention in response to its Protection System failure to operate.

M1. Each Transmission Owner, Generator Owner, and Distribution Provider shall have dated evidence that demonstrates it identified the Misoperation of its Protection System component(s), if any, that meet the circumstances in Requirement R1, Parts 1.1, 1.2, and 1.3 within the allotted time period. Acceptable evidence for Requirement R1, including Parts 1.1, 1.2, and 1.3 may include, but is not limited to the following dated documentation (electronic or hardcopy format): reports, databases, spreadsheets, emails, facsimiles, lists, logs, records, declarations, analyses of sequence of events, relay targets, Disturbance Monitoring Equipment (DME) records, test results, or transmittals.

R2. Each Transmission Owner, Generator Owner, and Distribution Provider that owns a BES interrupting device that operated shall, within 120 calendar days of the BES interrupting device operation, provide notification as described in Parts 2.1 and 2.2. *[Violation Risk Factor: Medium][Time Horizon: Operations Assessment, Operations Planning]*

2.1 For a BES interrupting device operation by a Composite Protection System or by manual intervention in response to a Protection System failure to operate, notification of the operation shall be provided to the other owner(s) that share Misoperation identification responsibility for the Composite Protection System under the following circumstances:

2.1.1 The BES interrupting device owner shares the Composite Protection System ownership with any other owner; and

2.1.2 The BES interrupting device owner has determined that a Misoperation occurred or cannot rule out a Misoperation; and

2.1.3 The BES interrupting device owner has determined that its Protection System component(s) did not cause the BES interrupting device(s) operation or cannot determine whether its Protection System components caused the BES interrupting device(s) operation.

2.2 For a BES interrupting device operation by a Protection System component intended to operate as backup protection for a condition on another entity's BES Element, notification of the operation shall be provided to the other Protection System owner(s) for which that backup protection was provided.

M2. Each Transmission Owner, Generator Owner, and Distribution Provider shall have dated evidence that demonstrates notification to the other owner(s), within the allotted time period for either Requirement R2, Part 2.1, including subparts 2.1.1, 2.1.2, and 2.1.3 and Requirement R2, Part 2.2. Acceptable evidence for Requirement R2, including Parts 2.1 and 2.2 may include, but is not limited to the following dated documentation (electronic or hardcopy format): emails, facsimiles, or transmittals.

R3. Each Transmission Owner, Generator Owner, and Distribution Provider that receives notification, pursuant to Requirement R2 shall, within the later of 60 calendar days of notification or 120 calendar days of the BES interrupting device(s) operation, identify whether its Protection System component(s) caused a Misoperation. *[Violation Risk Factor: Medium][Time Horizon: Operations Assessment, Operations Planning]*

M3. Each Transmission Owner, Generator Owner, and Distribution Provider shall have dated evidence that demonstrates it identified whether its Protection System component(s) caused a Misoperation within the allotted time period. Acceptable evidence for Requirement R3 may include, but is not limited to the following dated documentation (electronic or hardcopy format): reports, databases, spreadsheets, emails, facsimiles, lists, logs, records, declarations, analyses of sequence of events, relay targets, DME records, test results, or transmittals.

R4. Each Transmission Owner, Generator Owner, and Distribution Provider that has not determined the cause(s) of a Misoperation, for a Misoperation identified in accordance with Requirement R1 or R3, shall perform investigative action(s) to determine the cause(s) of the Misoperation at least once every two full calendar quarters after the Misoperation was first identified, until one of the following completes the investigation: *[Violation Risk Factor: Medium] [Time Horizon: Operations Assessment, Operations Planning]*

- The identification of the cause(s) of the Misoperation; or
- A declaration that no cause was identified.

M4. Each Transmission Owner, Generator Owner, and Distribution Provider shall have dated evidence that demonstrates it performed at least one investigative action according to Requirement R4 every two full calendar quarters until a cause is identified or a declaration is made. Acceptable evidence for Requirement R4 may include, but is not limited to the following dated documentation (electronic or hardcopy format): reports, databases, spreadsheets, emails, facsimiles, lists, logs, records, declarations, analyses of sequence of events, relay targets, DME records, test results, or transmittals.

R5. Each Transmission Owner, Generator Owner, and Distribution Provider that owns the Protection System component(s) that caused the Misoperation shall, within 60 calendar days of first identifying a cause of the Misoperation: [*Violation Risk Factor: Medium*] [*Time Horizon: Operations Planning, Long-Term Planning*]

- Develop a Corrective Action Plan (CAP) for the identified Protection System component(s), and an evaluation of the CAP's applicability to the entity's other Protection Systems including other locations; or
- Explain in a declaration why corrective actions are beyond the entity's control or would not improve BES reliability, and that no further corrective actions will be taken.

M5. Each Transmission Owner, Generator Owner, and Distribution Provider shall have dated evidence that demonstrates it developed a CAP and an evaluation of the CAP's applicability to other Protection Systems and locations, or a declaration in accordance with Requirement R5. Acceptable evidence for Requirement R5 may include, but is not limited to the following dated documentation (electronic or hardcopy format): CAP and evaluation, or declaration.

R6. Each Transmission Owner, Generator Owner, and Distribution Provider shall implement each CAP developed in Requirement R5, and update each CAP if actions or timetables change, until completed. *[Violation Risk Factor: Medium][Time Horizon: Operations Planning, Long-Term Planning]*

M6. Each Transmission Owner, Generator Owner, and Distribution Provider shall have dated evidence that demonstrates it implemented each CAP, including updating actions or timetables. Acceptable evidence for Requirement R6 may include, but is not limited to the following dated documentation (electronic or hardcopy format): records that document the implementation of each CAP and the completion of actions for each CAP including revision history of each CAP. Evidence may also include work management program records, work orders, and maintenance records.

C. Compliance

1. Compliance Monitoring Process

1.1. Compliance Enforcement Authority

As defined in the NERC Rules of Procedure, "Compliance Enforcement Authority" (CEA) means NERC or the Regional Entity in their respective roles of monitoring and enforcing compliance with the NERC Reliability Standards.

1.2. Evidence Retention

The following evidence retention periods identify the period of time an entity is required to retain specific evidence to demonstrate compliance. For instances where the evidence retention period specified below is shorter than the time since the last audit, the CEA may ask an entity to provide other evidence to show that it was compliant for the full time period since the last audit.

The Transmission Owner, Generator Owner, and Distribution Provider shall keep data or evidence to show compliance as identified below unless directed by its CEA to retain specific evidence for a longer period of time as part of an investigation.

The Transmission Owner, Generator Owner, and Distribution Provider shall retain evidence of Requirements R1, R2, R3, and R4, Measures M1, M2, M3, and M4 for a minimum of 12 calendar months following the completion of each Requirement.

The Transmission Owner, Generator Owner, and Distribution Provider shall retain evidence of Requirement R5, Measure M5, including any supporting analysis per Requirements R1, R2, R3, and R4, for a minimum of 12 calendar months following completion of each CAP, completion of each evaluation, and completion of each declaration.

The Transmission Owner, Generator Owner, and Distribution Provider shall retain evidence of Requirement R6, Measure M6 for a minimum of 12 calendar months following completion of each CAP.

If a Transmission Owner, Generator Owner, or Distribution Provider is found non-compliant, it shall keep information related to the non-compliance until mitigation is complete and approved, or for the time specified above, whichever is longer.

The CEA shall keep the last audit records and all requested and submitted subsequent audit records.

1.3. Compliance Monitoring and Assessment Processes

Compliance Audit

Self-Certification

Spot Checking

Compliance Investigation

Self-Reporting

Complaint

1.4. Additional Compliance Information

None.

D. Table of Compliance Elements

R #	Time Horizon	VRF	Violation Severity Levels			
			Lower VSL	Moderate VSL	High VSL	Severe VSL
R1	Operations Assessment, Operations Planning	Medium	The responsible entity identified whether its Protection System component(s) caused a Misoperation in accordance with Requirement R1, but in more than 120 calendar days and less than or equal to 150 calendar days of the BES interrupting device operation.	The responsible entity identified whether its Protection System component(s) caused a Misoperation in accordance with Requirement R1, but in more than 150 calendar days and less than or equal to 165 calendar days of the BES interrupting device operation.	The responsible entity identified whether its Protection System component(s) caused a Misoperation in accordance with Requirement R1, but in more than 165 calendar days and less than or equal to 180 calendar days of the BES interrupting device operation.	The responsible entity identified whether its Protection System component(s) caused a Misoperation in accordance with Requirement R1, but in more than 180 calendar days of the BES interrupting device operation. OR The responsible entity failed to identify whether its Protection System component(s) caused a Misoperation in accordance with Requirement R1.

R #	Time Horizon	VRF	Violation Severity Levels			
			Lower VSL	Moderate VSL	High VSL	Severe VSL
R2	Operations Assessment, Operations Planning	Medium	The responsible entity notified the other owner(s) of the Protection System component(s) in accordance with Requirement R2, but in more than 120 calendar days and less than or equal to 150 calendar days of the BES interrupting device operation.	The responsible entity notified the other owner(s) of the Protection System component(s) in accordance with Requirement R2, but in more than 150 calendar days and less than or equal to 165 calendar days of the BES interrupting device operation.	The responsible entity notified the other owner(s) of the Protection System component(s) in accordance with Requirement R2, but in more than 165 calendar days and less than or equal to 180 calendar days of the BES interrupting device operation.	The responsible entity notified the other owner(s) of the Protection System component(s) in accordance with Requirement R2, but in more than 180 calendar days of the BES interrupting device operation. OR The responsible entity failed to notify one or more of the other owner(s) of the Protection System component(s) in accordance with Requirement R2.

R #	Time Horizon	VRF	Violation Severity Levels			
			Lower VSL	Moderate VSL	High VSL	Severe VSL
R3	Operations Assessment, Operations Planning	Medium	The responsible entity identified whether or not its Protection System component(s) caused a Misoperation in accordance with Requirement R3, but was less than or equal to 30 calendar days late.	The responsible entity identified whether or not its Protection System component(s) caused a Misoperation in accordance with Requirement R3, but was greater than 30 calendar days and less than or equal to 45 calendar days late.	The responsible entity identified whether or not its Protection System component(s) caused a Misoperation in accordance with Requirement R3, but was greater than 45 calendar days and less than or equal to 60 calendar days late.	The responsible entity identified whether or not its Protection System component(s) caused a Misoperation in accordance with Requirement R3, but was greater than 60 calendar days late. OR The responsible entity failed to identify whether or not a Misoperation of its Protection System component(s) occurred in accordance with Requirement R3.

R #	Time Horizon	VRF	Violation Severity Levels			
			Lower VSL	Moderate VSL	High VSL	Severe VSL
R4	Operations Assessment, Operations Planning	Medium	The responsible entity performed at least one investigative action in accordance with Requirement R4, but was less than or equal to one calendar quarter late.	The responsible entity performed at least one investigative action in accordance with Requirement R4, but was greater than one calendar quarter and less than or equal to two calendar quarters late.	The responsible entity performed at least one investigative action in accordance with Requirement R4, but was greater than two calendar quarters and less than or equal to three calendar quarters late.	The responsible entity performed at least one investigative action in accordance with Requirement R4, but was more than three calendar quarters late. OR The responsible entity failed to perform investigative action(s) in accordance with Requirement R4.

R #	Time Horizon	VRF	Violation Severity Levels			
			Lower VSL	Moderate VSL	High VSL	Severe VSL
R5	Operations Planning, Long-Term Planning	Medium	The responsible entity developed a CAP, or explained in a declaration in accordance with Requirement R5, but in more than 60 calendar days and less than or equal to 70 calendar days of first identifying a cause of the Misoperation. OR (See next page)	The responsible entity developed a CAP, or explained in a declaration in accordance with Requirement R5, but in more than 70 calendar days and less than or equal to 80 calendar days of first identifying a cause of the Misoperation. OR (See next page)	The responsible entity developed a CAP, or explained in a declaration in accordance with Requirement R5, but in more than 80 calendar days and less than or equal to 90 calendar days of first identifying a cause of the Misoperation. OR (See next page)	The responsible entity developed a CAP, or explained in a declaration in accordance with Requirement R5, but in more than 90 calendar days of first identifying a cause of the Misoperation. OR The responsible entity failed to develop a CAP or explain in a declaration in accordance with Requirement R5. OR (See next page)

R #	Time Horizon	VRF	Violation Severity Levels			
			Lower VSL	Moderate VSL	High VSL	Severe VSL
R5	(Continued)		The responsible entity developed an evaluation in accordance with Requirement R5, but in more than 60 calendar days and less than or equal to 70 calendar days of first identifying a cause of the Misoperation.	The responsible entity developed an evaluation in accordance with Requirement R5, but in more than 70 calendar days and less than or equal to 80 calendar days of first identifying a cause of the Misoperation.	The responsible entity developed an evaluation in accordance with Requirement R5, but in more than 80 calendar days and less than or equal to 90 calendar days of first identifying a cause of the Misoperation.	The responsible entity developed an evaluation in accordance with Requirement R5, but in more than 90 calendar days of first identifying a cause of the Misoperation. OR The responsible entity failed to develop an evaluation in accordance with Requirement R5.
R6	Operations Planning, Long-Term Planning	Medium	The responsible entity implemented, but failed to update a CAP, when actions or timetables changed, in accordance with Requirement R6.	N/A	N/A	The responsible entity failed to implement a CAP in accordance with Requirement R6.

E. Regional Variances

None.

F. Interpretations

None.

G. Associated Documents

NERC System Protection and Controls Subcommittee of the NERC Planning Committee, Assessment of Standards: PRC-003-1 – Regional Procedure for Analysis of Misoperations of Transmission and Generation Protection Systems, PRC-004-1 – Analysis and Mitigation of Transmission and Generation Protection Misoperations, PRC-016-1 – Special Protection System Misoperations, May 22, 2009.[3]

Version History

Version	Date	Action	Change Tracking
0	April 1, 2005	Effective Date	New
1	December 1, 2005	1. Changed incorrect use of certain hyphens (-) to "en dash" (–) and "em dash (—)." 2. Added "periods" to items where appropriate. 3. Changed "Timeframe" to "Time Frame" in item D, 1.2.	01/20/06
~~2~~		~~Modified to address Order No. 693 Directives contained in paragraph 1469.~~	~~Revised~~
~~2~~	~~August 5, 2010~~	~~Adopted by NERC Board of Trustees~~	

[3] http://www.nerc.com/comm/PC/System%20Protection%20and%20Control%20Subcommittee%20SPCS%20DL/PRC-003-004-016%20Report.pdf

Version	Date	Action	Change Tracking
1a	February 17, 2011	Adopted by NERC Board of Trustees~~Added Appendix 1 - Interpretation regarding applicability of standard to protection of radially connected transformers~~	Project 2009-17 interpretation adding Appendix 1 - Interpretation regarding applicability of standard to protection of radially connected transformers
~~1a~~	~~February 17, 2011~~	~~Adopted by NERC Board of Trustees~~	
1a	September 26, 2011	Appended FERC~~ Order issued approving the~~ approved interpretation of R1 and R3 ~~(FERC's Order is effective as of September 26, 2011)~~to version 1	FERC's Order approving the interpretation of R1 and R3 is effective as of September 26, 2011
2	August 5, 2010	Adopted by NERC Board of Trustees	Project 2010-12 modifications to address Order No. 693 Directives contained in paragraph 1469
2a	September 26, 2011	Appended FERC-approved interpretation of R1 and R3 to version 2	FERC's Order approving the interpretation of R1 and R3 is effective as of September 26, 2011
2.1a	February 9, 2012	~~Errata change: Edited R2 to add "…and generator interconnection Facility…"~~Adopted by NERC Board of Trustees	~~Revision~~Errata change under Project 2010-07 to add "…and generator interconnection Facility…"

Version	Date	Action	Change Tracking
~~2.1a~~	~~February 9, 2012~~	~~Errata change adopted by NERC Board of Trustees~~	
~~2.1a~~	~~September 19, 2013~~	~~FERC Order issued approving PRC-004-2.1a (approval becomes effective November 25, 2013).~~	
3	August 14, 2014	Adopted by NERC Board of Trustees	Revision under Project 2010-05.1
4	November 13, 2014	Adopted by NERC Board of Trustees	~~**Standad i**~~ Applicability ~~revised~~revision under Project 2014-01 to clarify application of Requirements to BES dispersed power producing resources~~. n November 13, 2014 Project 2014-01~~
5		Adopted by NERC Board of Trustees	Revision under Project 2008-02.2

Guidelines and Technical Basis

Introduction

This standard addresses the reliability issues identified in the letter[4] from Gerry Cauley, NERC President and CEO, dated January 7, 2011.

> "Nearly all major system failures, excluding perhaps those caused by severe weather, have misoperations of relays or automatic controls as a factor contributing to the propagation of the failure. …Relays can misoperate, either operate when not needed or fail to operate when needed, for a number of reasons. First, the device could experience an internal failure – but this is rare. Most commonly, relays fail to operate correctly due to incorrect settings, improper coordination (of timing and set points) with other devices, ineffective maintenance and testing, or failure of communications channels or power supplies. Preventable errors can be introduced by field personnel and their supervisors or more programmatically by the organization."

The standard also addresses the findings in the *2011 Risk Assessment of Reliability Performance*[5]; July 2011.

> "…a number of multiple outage events were initiated by protection system Misoperations. These events, which go beyond their design expectations and operating procedures, represent a tangible threat to reliability. A deeper review of the root causes of dependent and common mode events, which include three or more automatic outages, is a high priority for NERC and the industry."

The *State of Reliability 2014*[6] report continued to identify Protection System Misoperations as a significant contributor to automatic transmission outage severity. The report recommended completion of the development of PRC-004-3 as part of the solution to address Protection System Misoperations.

Definitions

The Misoperation definition is based on the IEEE/PSRC Working Group I3 "Transmission Protective Relay System Performance Measuring Methodology[7]." Misoperations of a Protection System include failure to operate, slowness in operating, or operating when not required either during a Fault or non-Fault condition.

---

4 http://www.nerc.com/pa/Stand/Project%20201005%20Protection%20System%20Misoperations%20DL/20110209130708-Cauley%20letter.pdf

5 "2011 Risk Assessment of Reliability Performance." NERC. http://www.nerc.com/files/2011_RARPR_FINAL.pdf. July 2011. Pg. 3.

6 "State of Reliability 2014." NERC. http://www.nerc.com/pa/Stand/Pages/RelaibilityCoordinationProject20066.aspx. May 2014. Pg. 18 of 106.

7 "Transmission Protective Relay System Performance Measuring Methodology." Working Group I3 of Power System Relaying Committee of IEEE Power Engineering Society. 1999.

For reference, a "Protection System" is defined in the *Glossary of Terms Used in NERC Reliability Standards* ("NERC Glossary") as:

- Protective relays which respond to electrical quantities,
- Communications systems necessary for correct operation of protective functions,
- Voltage and current sensing devices providing inputs to protective relays,
- Station dc supply associated with protective functions (including station batteries, battery chargers, and non-battery-based dc supply), and
- Control circuitry associated with protective functions through the trip coil(s) of the circuit breakers or other interrupting devices.

A BES interrupting device is a BES Element, typically a circuit breaker or circuit switcher that has the capability to interrupt fault current. Although BES interrupting device mechanisms are not part of a Protection System, the standard uses the operation of a BES interrupting device by a Protection System to initiate the review for Misoperation.

The following two definitions are being proposed for inclusion in the NERC Glossary:

> **Composite Protection System –** *The total complement of Protection System(s) that function collectively to protect an Element. Backup protection provided by a different Element's Protection System(s) is excluded.*

The Composite Protection System definition is based on the principle that an Element's multiple layers of protection are intended to function collectively. This definition has been introduced in this standard and incorporated into the proposed definition of Misoperation to clarify that the overall performance of an Element's total complement of protection should be considered while evaluating an operation.

Composite Protection System – Line Example

The Composite Protection System of the Alpha-Beta line (Circuit #123) is comprised of current differential, permissive overreaching transfer trip (POTT), step distance (classic zone 1, zone 2, and zone 3), instantaneous-overcurrent, time-overcurrent, out-of-step, and overvoltage protection. The protection is housed at the Alpha and Beta substations, and includes the associated relays, communications systems, voltage and current sensing devices, DC supplies, and control circuitry.

Composite Protection System – Transformer Example

The Composite Protection System of the Alpha transformer (#2) is comprised of internal differential, overall differential, instantaneous-overcurrent, and time-overcurrent protection. The protection is housed at the Alpha substation, and includes the associated relays, voltage and current sensing devices, DC supplies, and control circuitry.

Composite Protection System – Generator Example

The Composite Protection System of the Beta generator (#3) is comprised of generator differential, overall differential, overcurrent, stator ground, reverse power, volts per hertz, loss-of-field, and undervoltage protection. The protection is housed at the Beta generating plant and at the Beta substation, and includes the associated relays, voltage and current sensing devices, DC supplies, and control circuitry.

Composite Protection System – Breaker Failure Example

Breaker failure protection provides backup protection for the breaker, and therefore is part of the breaker's Composite Protection System. Considering breaker failure protection to be part of another Element's Composite Protection System could lead to an incorrect conclusion that a breaker failure operation automatically satisfies the "Slow Trip" criteria of the Misoperation definition.

- An example of a correct operation of the breaker's Composite Protection System is when the breaker failure relaying tripped because the line relaying operated, but the breaker failed to clear the Fault. The breaker failure relaying operated because of a failed trip coil. The failed trip coil caused a Misoperation of the line's Composite Protection System.
- An example of a correct operation of the breaker's Composite Protection System is when the breaker failure relaying tripped because the line relaying operated, but the breaker failed to clear the Fault. Only the breaker failure relaying operated because of a failed breaker mechanism. This was not a Misoperation because the breaker mechanism is not part of the breaker's Composite Protection System.
- An example of an "Unnecessary Trip – During Fault" is when the breaker failure relaying tripped at the same time as the line relaying during a Fault. The Misoperation was due to the breaker failure timer being set to zero.

Misoperation – *The failure a Composite Protection System to operate as intended for protection purposes. Any of the following is a Misoperation:*

1. **Failure to Trip – During Fault** *– A failure of a Composite Protection System to operate for a Fault condition for which it is designed. The failure of a Protection System component is not a Misoperation as long as the performance of the Composite Protection System is correct.*
2. ***Failure to Trip – Other Than Fault*** *– A failure of a Composite Protection System to operate for a non-Fault condition for which it is designed, such as a power swing, undervoltage, overexcitation, or loss of excitation. The failure of a Protection System component is not a Misoperation as long as the performance of the Composite Protection System is correct.*

3. ***Slow Trip – During Fault*** *– A Composite Protection System operation that is slower than required for a Fault condition if the duration of its operating time resulted in the operation of at least one other Element's Composite Protection System.*
4. ***Slow Trip – Other Than Fault*** *– A Composite Protection System operation that is slower than required for a non-Fault condition, such as a power swing, undervoltage, overexcitation, or loss of excitation, if the duration of its operating time resulted in the operation of at least one other Element's Composite Protection System.*
5. ***Unnecessary Trip – During Fault*** *– An unnecessary Composite Protection System operation for a Fault condition on another Element.*
6. ***Unnecessary Trip – Other Than Fault*** *– An unnecessary Composite Protection System operation for a non-Fault condition. A Composite Protection System operation that is caused by personnel during on-site maintenance, testing, inspection, construction, or commissioning activities is not a Misoperation.*

The Misoperation definition is based on the principle that an Element's total complement of protection is intended to operate dependably and securely.

- Failure to automatically reclose after a Fault condition is not included as a Misoperation because reclosing equipment is not included within the definition of Protection System.
- A breaker failure operation does not, in itself, constitute a Misoperation.
- A remote backup operation resulting from a "Failure to Trip" or a "Slow Trip" does not, in itself, constitute a Misoperation.

This proposed definition of Misoperation provides additional clarity over the current version. A Misoperation is the failure of a Composite Protection System to operate as intended for protection purposes. The definition includes six categories which provide further differentiation of what constitutes a Misoperation. These categories are discussed in greater detail in the following sections.

Failure to Trip – During Fault

This category of Misoperation typically results in the Fault condition being cleared by remote backup Protection System operation.

Example 1a: A failure of a transformer's Composite Protection System to operate for a transformer Fault is a Misoperation.

Example 1b: A failure of a "primary" transformer relay (or any other component) to operate for a transformer Fault is not a "Failure to Trip – During Fault" Misoperation as long as another component of the transformer's Composite Protection System operated.

Example 1c: A lack of target information does not by itself constitute a Misoperation. When a high-speed pilot system does not target because a high-speed zone element trips first, it would not in and of itself be a Misoperation.

Example 1d: A failure of an overall differential relay to operate is not a "Failure to Trip – During Fault" Misoperation as long as another component such as a generator differential relay operated.

Example 1e: The Composite Protection System for a bus does not operate during a bus Fault which results in the operation of all local transformer Protection Systems connected to that bus and all remote line Protection Systems connected to that bus isolating the faulted bus from the grid. The operation of the local transformer Protection Systems and the operation of all remote line Protection Systems correctly provided backup protection. There is one "Failure to Trip – During Fault" Misoperation of the bus Composite Protection System.

In analyzing the Protection System for Misoperation, the entity must also consider whether the "Slow Trip – During Fault" category applies to the operation.

Failure to Trip – Other Than Fault

This category of Misoperation may have resulted in operator intervention. The "Failure to Trip – Other Than Fault" conditions cited in the definition are examples only, and do not constitute an all-inclusive list.

Example 2a: A failure of a generator's Composite Protection System to operate for an unintentional loss of field condition is a Misoperation.

Example 2b: A failure of an overexcitation relay (or any other component) is not a "Failure to Trip – Other Than Fault" Misoperation as long as the generator's Composite Protection System operated as intended isolating the generator from the BES.

In analyzing the Protection System for Misoperation, the entity must also consider whether the "Slow Trip – Other Than Fault" category applies to the operation.

Slow Trip – During Fault

This category of Misoperation typically results in remote backup Protection System operation before the Fault is cleared.

Example 3a: A Composite Protection System that is slower than required for a Fault condition is a Misoperation if the duration of its operating time resulted in the operation of at least one other Element's Composite Protection System. The current differential element of a multiple function relay failed to operate for a line Fault. The same relay's time-overcurrent element operated after a time delay. However, an adjacent line also operated from a time-overcurrent element. The faulted line's time-overcurrent element was found to be set to trip too slowly.

Example 3b: A failure of a breaker's Composite Protection System to operate as quickly as intended to meet the expected critical Fault clearing time for a line Fault in conjunction with a breaker failure (i.e., stuck breaker) is a Misoperation if it resulted in an unintended operation of at least one other Element's Composite Protection System. If a generating unit's Composite Protection System operates due to instability caused by the slow trip of the breaker's Composite Protection System, it is not an "Unnecessary Trip – During Fault" Misoperation of the generating unit's Composite Protection System. This event would be a "Slow Trip – During Fault" Misoperation of the breaker's Composite Protection System.

> **Example 3c:** A line connected to a generation interconnection station is protected with two independent high-speed pilot systems. The Composite Protection System for this line also includes step distance and time-overcurrent schemes in addition to the two pilot systems. During a Fault on this line, the two pilot systems fail to operate and the time-overcurrent scheme operates clearing the Fault with no generating units or other Elements tripping (i.e., no over-trips). This event is not a Misoperation.

The phrase “slower than required” means the duration of its operating time resulted in the operation of at least one other Element’s Composite Protection System. It would be impractical to provide a precise tolerance in the definition that would be applicable to every type of Protection System. Rather, the owner(s) reviewing each Protection System operation should understand whether the speed and outcome of its Protection System operation met their objective. The intent is not to require documentation of exact Protection System operation times, but to assure consideration of relay coordination and system stability by the owner(s) reviewing each Protection System operation.

The phrase “resulted in the operation of any other Composite Protection System” refers to the need to ensure that relaying operates in the proper or planned sequence (i.e., the primary relaying for a faulted Element operates before the remote backup relaying for the faulted Element).

In analyzing the Protection System for Misoperation, the entity must also consider the “Unnecessary Trip – During Fault” category to determine if an “unnecessary trip” applies to the Protection System operation of an Element other than the faulted Element.

If a coordination error was at the local terminal (i.e., set too slow), then it was a "Slow Trip," category of Misoperation at the local terminal.

Slow Trip – Other Than Fault

The phrase “slower than required” means the duration of its operating time resulted in the operation of at least one other Element’s Composite Protection System. It would be impractical to provide a precise tolerance in the definition that would be applicable to every type of Protection System. Rather, the owner(s) reviewing each Protection System operation should understand whether the speed and outcome of its Protection System operation met their objective. The intent is not to require documentation of exact Protection System operation times, but to assure consideration of relay coordination and system stability by the owner(s) reviewing each Protection System operation.

> **Example 4:** A phase to phase fault occurred on the terminals of a generator. The generator's Composite Protection System and a transmission line's Composite Protection System both operated in response to the fault. It was found during subsequent investigation that the generator protection contained an inappropriate time delay. This caused the transmission line's correctly set overreaching zone of protection to operate. This was a Misoperation of the generator’s Composite Protection System, but not of the transmission line’s Composite Protection System.

The “Slow Trip – Other Than Fault” conditions cited in the definition are examples only, and do not constitute an all-inclusive list.

Unnecessary Trip – During Fault

An operation of a properly coordinated remote Protection System is not in and of itself a Misoperation if the Fault has persisted for a sufficient time to allow the correct operation of the Composite Protection System of the faulted Element to clear the Fault. A BES interrupting device failure, a "failure to trip" Misoperation, or a "slow trip" Misoperation may result in a proper remote Protection System operation.

> **Example 5:** An operation of a transformer's Composite Protection System which trips (i.e., over-trips) for a properly cleared line Fault is a Misoperation. The Fault is cleared properly by the faulted equipment's Composite Protection System (i.e., line relaying) without the need for an external Protection System operation resulting in an unnecessary trip of the transformer protection; therefore, the transformer Protection System operation is a Misoperation.
>
> **Example 5b:** An operation of a line's Composite Protection System which trips (i.e., over-trips) for a properly cleared Fault on a different line is a Misoperation. The Fault is cleared properly by the faulted line's Composite Protection System (i.e., line relaying); however, elsewhere in the system, a carrier blocking signal is not transmitted (e.g., carrier ON/OFF switch found in OFF position) resulting in the operation of a remote Protection System, single-end trip of a non-faulted line. The operation of the Protection System for the non-faulted line is an unnecessary trip during a Fault. Therefore, the non-faulted line Protection System operation is an "Unnecessary Trip – During Fault" Misoperation.
>
> **Example 5c:** If a coordination error was at the remote terminal (i.e., set too fast), then it was an "Unnecessary Trip – During Fault" category of Misoperation at the remote terminal.

Unnecessary Trip – Other Than Fault

Unnecessary trips for non-Fault conditions include but are not limited to: power swings, overexcitation, loss of excitation, frequency excursions, and normal operations.

> **Example 6a:** An operation of a line's Composite Protection System due to a relay failure during normal operation is a Misoperation.
>
> **Example 6b:** Tripping a generator by the operation of the loss of field protection during an off-nominal frequency condition while the field is intact is a Misoperation assuming the Composite Protection System was not intended to operate under this condition.
>
> **Example 6c:** An impedance line relay trip for a power swing that entered the relay's characteristic is a Misoperation if the power swing was stable and the relay operated because power swing blocking was enabled and should have prevented the trip, but did not.
>
> **Example 6d:** Tripping a generator operating at normal load by the operation of a reverse power protection relay due to a relay failure is a Misoperation.

Additionally, an operation that occurs during a non-Fault condition but was initiated directly by on-site (i.e., real-time) maintenance, testing, inspection, construction, or commissioning is not a Misoperation.

> **Example 6e:** A BES interrupting device operation that occurs at the remote end of a line during a non-Fault condition because a direct transfer trip was initiated by system maintenance and testing activities at the local end of the line is not a Misoperation because of the maintenance exclusion in category 6 of the definition of "Misoperation."

The "on-site" activities at one location that initiates a trip to another location are included in this exemption. This includes operation of a Protection System when energizing equipment to facilitate measurements, such as verification of current circuits as a part of performing commissioning; however, once the maintenance, testing, inspection, construction, or commissioning activity associated with the Protection System is complete, the "on-site" Misoperation exclusion no longer applies, regardless of the presence of on-site personnel.

Special Cases

Protection System operations for these cases would not be a Misoperation.

> **Example 7a:** A generator Protection System operation prior to closing the unit breaker(s) is not a Misoperation provided no in-service Elements are tripped.

This type of operation is not a Misoperation because the generating unit is not synchronized and is isolated from the BES. Protection System operations that occur when the protected Element is out of service and that do not trip any in-service Elements are not Misoperations.

In some cases where zones of protection overlap, the owner(s) of Elements may decide to allow a Protection System to operate faster in order to gain better overall Protection System performance for an Element.

> **Example 7b:** The high-side of a transformer connected to a line may be within the zone of protection of the supplying line's relaying. In this case, the line relaying is planned to protect the area of the high-side of the transformer and into its primary winding. In order to provide faster protection for the line, the line relaying may be designed and set to operate without direct coordination (or coordination is waived) with local protection for Faults on the high-side of the connected transformer. Therefore, the operation of the line relaying for a high-side transformer Fault operated as intended and would not be a Misoperation.

Below are examples of conditions that would be a Misoperation.

> **Example7c:** A 230 kV shunt capacitor bank was released for operational service. The capacitor bank trips due to a settings error in the capacitor bank differential relay upon energization.
>
> **Example 7d:** A 230/115 kV BES transformer bank trips out when being re-energized due to an incorrect operation of the transformer differential relay for inrush after being released for operational service. Only the high-side breaker opens since the low-side breaker had not yet been closed.

Non-Protective Functions

BES interrupting device operations which are initiated by non-protective functions, such as those associated with generator controls, excitation controls, or turbine/boiler controls, static voltampere-reactive compensators (SVC), flexible ac transmission systems (FACTS), high-voltage dc (HVdc) transmission systems, circuit breaker mechanisms, or other facility control systems are not operations of a Protection System. The standard is not applicable to non-protective functions such as automation (e.g., data collection) or control functions that are embedded within a Protection System.

Control Functions

The entity must make a determination as to whether the standard is applicable to each operation of its Protection System in accordance with the provided exclusions in the standard's Applicability, see Section 4.2.1. The subject matter experts (SME) developing this standard recognize that entities use Protection Systems as part of a routine practice to control BES Elements. This standard is not applicable to operation of protective functions within a Protection System when intended for controlling a BES Element as a part of an entity's process or planned switching sequence. The following are examples of conditions to which this standard is not applicable:

> **Example 8a:** The reverse power protective function that operates to remove a generating unit from service using the entity's normal or routine process.
>
> **Example 8b:** The reverse power relay enables a permissive trip and the generator operator trips the unit.

The standard is not applicable to operation of the protective relay because its operation is intended as a control function as part of a controlled shutdown sequence for the generator. However, the standard remains applicable to operation of the reverse power relay when it operates for conditions not associated with the controlled shutdown sequence, such as a motoring condition caused by a trip of the prime mover.

The following is another example of a condition to which this standard is not applicable:

> **Example 8c:** Operation of a capacitor bank interrupting device for voltage control using functions embedded within a microprocessor based relay that is part of a Protection System.

The above are examples only, and do not constitute an all-inclusive list to which the standard is not applicable.

Extenuating Circumstances

In the event of a natural disaster or other extenuating circumstances, the December 20, 2012 Sanction Guidelines of the North American Electric Reliability Corporation, Section 2.8, Extenuating Circumstances, reads: "In unique extenuating circumstances causing or contributing to the violation, such as significant natural disasters, NERC or the Regional Entity may significantly reduce or eliminate Penalties." The Regional Entities to whom NERC has delegated

authority will consider extenuating circumstances when considering any sanctions in relation to the timelines outlined in this standard.

The volume of Protection System operations tend to be sporadic. If a high rate of Protection System operations is not sustained, utilities will have an opportunity to catch up within the 120 day period.

Requirement Time Periods

The time periods within all the Requirements are distinct and separate. The applicable entity in Requirement R1 has 120 calendar days to identify whether a BES interrupting device operation is a Misoperation. Once the applicable entity has identified a Misoperation, it has completed its performance under Requirement R1. Identified Misoperations without an identified cause become subject to Requirement R4 and any subsequent Requirements as necessary. Identified Misoperations with an identified cause become subject to Requirement R5 and any subsequent Requirements as necessary.

In Requirement R2, the applicable entity has 120 calendar days, based on the date of the BES interrupting device operation, to provide notification to the other Protection System owners that meet the circumstances in Parts 2.1 and 2.2. For the case of an applicable entity that was notified (R3), it has the later of 120 calendar days from the date of the BES interrupting device operation or 60 calendar days of notification to identify whether its Protection System components caused a Misoperation.

Once a Misoperation is identified in either Requirement R1 or R3, and the applicable entity did not identify the cause(s) of the Misoperation, the time period for performing at least one investigative action every two full calendar quarters begins. The time period(s) in Requirement R4 resets upon each period. When the applicable entity's investigative actions identify the cause of the identified Misoperation or the applicable entity declares that no cause was found, the applicable entity has completed its performance in Requirement R4.

The time period in Requirement R5 begins when the Misoperation cause is first identified. The applicable entity is allotted 60 calendar days to perform one of the two activities listed in Requirement R5 (e.g., CAP or declaration) to complete its performance under Requirement R5.

Requirement R6 time period is determined by the actions and the associated timetable to complete those actions identified in the CAP. The time periods contained in the CAP may change from time to time and the applicable entity is required to update the timetable when it changes.

Time periods provided in the Requirements are intended to provide a reasonable amount of time to perform each Requirement. Performing activities in the least amount of time facilitates prompt identification of Misoperations, notification to other Protection System owners, identification of the cause(s), correction of the cause(s), and that important information is retained that may be lost due to time.

Requirement R1

This Requirement initiates a review of each BES interrupting device operation to identify whether or not a Misoperation may have occurred. Since the BES interrupting device owner typically monitors and tracks device operations, the owner is the logical starting point for identifying Misoperations of Protection Systems for BES Elements. A review is required when (1) a BES interrupting device operates that is caused by a Protection System or by manual intervention in response to a Protection System failure to operate, (2) regardless of whether the owner owns all or part of the Protection System component(s), and (3) the owner identified its Protection System component(s) as causing the BES interrupting device operation or was caused by manual intervention in response to its Protection System failure to operate.

Since most Misoperations result in the operation of one or more BES interrupting devices, these operations initiate a review to identify any Misoperation. If an Element is manually isolated in response to a failure to operate, the manual isolation of the Element triggers a review for Misoperation.

> **Example R1a:** The failure of a loss of field relay on a generating unit where an operator takes action to isolate the unit.

Manual intervention may indicate a Misoperation has occurred, thus requiring the initiation of an investigation by the BES interrupting device owner.

For the case where a BES interrupting device did not operate and remote clearing occurs due to the failure of a Composite Protection System to operate, the BES interrupting device owner would still review the operation under Requirement R1. However, if the BES interrupting device owner determines that its Protection System component operated as backup protection for a condition on another entity's BES Element, the owner would provide notification of the operation to the other Protection System owner(s) under Requirement R2, Part 2.2.

Protection Systems are made of many components. These components may be owned by different entities. For example, a Generator Owner may own a current transformer that sends information to a Transmission Owner's differential relay. All of these components and many more are part of a Protection System. It is expected that all of the owners will communicate with each other, sharing information freely, so that Protection System operations can be analyzed, Misoperations identified, and corrective actions taken.

Each entity is expected to use judgment to identify those Protection System operations that meet the definition of Misoperation regardless of the level of ownership. A combination of available information from resources such as counters, relay targets, Supervisory Control and Data Acquisition (SCADA) systems, or DME would typically be used to determine whether or not a Misoperation occurred. The intent of the standard is to classify an operation as a Misoperation if the available information leads to that conclusion. In many cases, it will not be necessary to leverage all available data to determine whether or not a Misoperation occurred. The standard also allows an entity to classify an operation as a Misoperation if entity is not sure. The entity may decide to identify the operation as a Misoperation to satisfy Requirement R1 and continue its investigation for a cause of the Misoperation under Requirement R4. If the continued investigative actions are inconclusive, the entity may declare no cause found and end its investigation. The entity is allotted 120 calendar days from the date of its BES interrupting device operation to identify whether its Protection System component(s) caused a Misoperation.

The Protection System operation may be documented in a variety of ways such as in a report, database, spreadsheet, or list. The documentation may be organized in a variety of ways such as by BES interrupting device, protected Element, or Composite Protection System.

Repeated operations which occur during the same automatic reclosing sequence do not need a separate identification under Requirement R1. Repeated Misoperations which occur during the same 24-hour period do not need a separate identification under Requirement R1. This is consistent with the NERC *Misoperations Report*[8] which states:

> "In order to avoid skewing the data with these repeated events, the NERC SPCS should clarify, in the next annual update of the misoperation template, that all misoperations due to the same equipment and cause within a 24 hour period be recorded as one misoperation."

The following is an example of a condition that is not a Misoperation.

> **Example R1b:** A high impedance Fault occurs within a transformer. The sudden pressure relaying detects and operates for the Fault, but the differential relaying did not operate due to the low Fault current levels. This is not a Misoperation because the Composite Protection System was not required to operate because the Fault was cleared by the sudden pressure relay.

Requirement R2

Requirement R2 ensures notification of those who have a role in identifying Misoperations, but were not accounted for within Requirement R1. In the case of multi-entity ownership, the entity that owns the BES interrupting device that operated is expected to use judgment to identify those Protection System operations that meet the definition of Misoperation under Requirement R1; however, if the entity that owns a BES interrupting device determines that its Protection System component(s) did not cause the BES interrupting device(s) operation or cannot determine whether its Protection System components caused the BES interrupting device(s) operation, it must notify the other Protection System owner(s) that share Misoperation identification responsibility when the criteria in Requirement R2 is met.

This Requirement does not preclude the Protection System owners from initially communicating and working together to determine whether a Misoperation occurred and, if so, the cause. The BES interrupting device owner is only required to officially notify the other owners when it: (1) shares the Composite Protection System ownership with other entity(ies), (2) determines that a Misoperation occurred or cannot rule out a Misoperation, and (3) determines its Protection System component(s) did not cause a Misoperation or is unsure. Officially notifying the other owners without performing a preliminary review may unnecessarily burden the other owners with compliance obligations under Requirement R3, redirect valuable resources, and add little benefit to reliability. The BES interrupting device owner should officially notify other owners when appropriate within the established time period.

[8] "Misoperations Report." Reporting Multiple Occurrences. NERC Protection System Misoperations Task Force. http://www.nerc.com/docs/pc/psmtf/PSMTF_Report.pdf. April 1, 2013. pg. 37 of 40.

The following is an example of a notification to another Protection System owner:

> **Example R2a:** Circuit breakers A and B at the Charlie station tripped from directional comparison blocking (DCB) relaying on 03/03/2014 at 15:43 UTC during an external Fault. As discussed last week, the fault records indicate that a problem with your equipment (failure to transmit) caused the operation.
>
> **Example R2b:** A generator unit tripped out immediately upon synchronizing to the grid due to a Misoperation of its overcurrent protection. The Transmission Owner owns the 230 kV generator breaker that operated. The Transmission Owner, as the owner of the BES interrupting device after determining that its Protection System components did not cause the Misoperation, notified the Generator Owner of the operation. The Generator Owner investigated and determined that its Protection System components caused the Misoperation. In this example, the Generator Owner's Protection System components did cause the Misoperation. As the owner of the Protection System components that caused the Misoperation, the Generator Owner is responsible for creating and implementing the CAP.

A Composite Protection System owned by different functional entities within the same registered entity does not necessarily satisfy the notification criteria in Part 2.1.1 of Requirement R2. For example, if the same personnel within a registered entity perform the Misoperation identification for both the Generator Owner and Transmission Owner functions, then the Misoperation identification would be completely covered in Requirement R1, and therefore notification would not be required. However, if the Misoperation identification is handled by different groups, then notification would be required because the Misoperation identification would not necessarily be covered in Requirement R1.

> **Example R2c:** Line A Composite Protection System (owned by entity 1) failed to operate for an internal Fault. As a result, the zone 3 portion of Line B's Composite Protection System (owned by entity 2) and zone 3 portion of Line C's Composite Protection System (owned by entity 3) operated to clear the Fault. Entity 2 and 3 notified entity 1 of the remote zone 3 operation.

For the case where a BES interrupting device operates to provide backup protection for a non-BES Element, the entity reviewing the operation is not required to notify the other owners of Protection Systems for non-BES Elements. No notification is required because this Reliability Standard is not applicable to Protection Systems for non-BES Elements.

Requirement R3

For Requirement R3 (i.e., notification received), the entity that also owns a portion of the Composite Protection System is expected to use judgment to identify whether the Protection System operation is a Misoperation. A combination of available information from resources such as counters, relay targets, SCADA, DME, and information from the other owner(s) would typically be used to determine whether or not a Misoperation occurred. The intent of the standard is to classify an operation as a Misoperation if the available information leads to that conclusion. In many cases, it will not be necessary to leverage all available data to determine whether or not a Misoperation occurred. The standard also allows an entity to classify an operation as a Misoperation if an entity is not sure. The entity may decide to identify the operation as a

Misoperation to satisfy Requirement R1 and continue its investigation for a cause of the Misoperation under Requirement R4. If the continued investigative actions are inconclusive, the entity may declare no cause found and end its investigation.

The entity that is notified by the BES interrupting device owner is allotted the later of 60 calendar days from receipt of notification or 120 calendar days from the BES interrupting device operation date to determine if its portion of the Composite Protection System caused the Protection System operation. It is expected that in most cases of a jointly owned Protection System, the entity making notification would have been in communication with the other owner(s) early in the process. This means that the shorter 60 calendar days only comes into play if the notification occurs in the second half of the 120 calendar days allotted to the BES interrupting device owner in Requirement R1.

The Protection System review may be organized in a variety of ways such as in a report, database, spreadsheet, or list. The documentation may be organized in a variety of ways such as by BES interrupting device, protected Element, or Composite Protection System. The BES interrupting device owner's notification received may be documented in a variety of ways such as an email or a facsimile.

Requirement R4

The entity in Requirement R4 (i.e., cause identification), whether it is the entity that owns the BES interrupting device or an entity that was notified, is expected to use due diligence in taking investigative action(s) to determine the cause(s) of an identified Misoperation for its portion of the Composite Protection System. The SMEs developing this standard recognize there will be cases where the cause(s) of a Misoperation will not be revealed during the allotted time periods in Requirements R1 or R3; therefore, Requirement R4 provides the entity a mechanism to continue its investigative work to determine the cause(s) of the Misoperation when the cause is not known.

A combination of available information from resources such as counters, relay targets, SCADA, DME, test results, and studies would typically be used to determine the cause of the Misoperation. At least one investigative action must be performed every two full calendar quarters until the investigation is completed.

The following is an example of investigative actions taken to determine the cause of an identified Misoperation:

> **Example R4a**: A Misoperation was identified on 03/18/2014. A line outage to test the Protection System was scheduled on 03/24/2014 for 12/15/2014 as the first investigative action (i.e., beyond the next two full calendar quarters) due to summer peak conditions. The protection engineer contacted the manufacturer on 04/10/2014 (i.e., within two full calendar quarters) to obtain any known issues. The engineer reviewed manufacturer's documents on 05/27/2014. The outage schedule was confirmed on 08/29/2014 and was taken on 12/15/2014. Testing was completed on 12/16/2014 (i.e., in the second two full quarters) revealing the microprocessor relay as the cause of the Misoperation. A CAP is being developed to replace the relay.

Periodic action minimizes compliance burdens and focuses the entity's effort on determining the cause(s) of the Misoperation while providing measurable evidence. The SMEs recognize that

certain planned investigative actions may require months or years to schedule and complete; therefore, the entity is only required to perform at least one investigative action every two full calendar quarters. If an investigative action is performed in the first quarter of a calendar year, the next investigative action would need to be performed by the end of the third calendar quarter. If an investigative action is performed in the last quarter of a calendar year, the next investigative action would need to be performed by the end of the second calendar quarter of the following calendar year. Investigative actions may include a variety of actions, such as reviewing DME records, performing or reviewing studies, completing relay calibration or testing, requesting manufacturer review, requesting an outage, or confirming a schedule.

The entity's investigation is complete when it identifies the cause of the Misoperation or makes a declaration that no cause was determined. The declaration is intended to be used if the entity determines that investigative actions have been exhausted or have not provided direction for identifying the Misoperation cause. Historically, approximately 12% of Misoperations are unknown or unexplainable.[9]

Although the entity only has to document its specific investigative actions taken to determine the cause(s) of an identified Misoperation, the entity should consider the benefits of formally organizing (e.g., in a report or database) its actions and findings. Well documented investigative actions and findings may be helpful in future investigations of a similar event or circumstances. A thorough report or database may contain a detailed description of the event, information gathered, investigative actions, findings, possible causes, identified causes, and conclusions. Multiple owners of a Composite Protection System might consider working together to produce a common report for their mutual benefit.

The following are examples of a declaration where no cause was determined:

> **Example R4b**: A Misoperation was identified on 04/11/2014. All relays at station A and B functioned properly during testing on 08/26/2014 as the first investigative action. The carrier system functioned properly during testing on 08/27/2014. The carrier coupling equipment functioned properly during testing on 08/28/2014. A settings review completed on 09/03/2014 indicated the relay settings were proper. Since the equipment involved in the operation functioned properly during testing, the settings were reviewed and found to be correct, and the equipment at station A and station B is already monitored. The investigation is being closed because no cause was found.
>
> **Example R4c:** A Misoperation was identified on 03/22/2014. The protection scheme was replaced before the cause was identified. The power line carrier or PLC based protection was replaced with fiber-optic based protection with an in-service date of 04/16/2014. The new system will be monitored for recurrence of the Misoperation.

Requirement R5

Resolving the causes of Protection System Misoperations benefits BES reliability by preventing recurrence. The Corrective Action Plan (CAP) is an established tool for resolving operational problems. The NERC Glossary defines a Corrective Action Plan as, *"A list of actions and an*

[9] NERC System Protection and Control Subcommittee. Misoperations Report. April 1, 2013: http://www.nerc.com/docs/pc/psmtf/PSMTF_Report.pdf. Figure 15: NERC Wide Misoperations by Cause Code. pg. 22 of 40.

associated timetable for implementation to remedy a specific problem." Since a CAP addresses specific problems, the determination of what went wrong needs to be completed before developing a CAP. When the Misoperation cause is identified in Requirement R1, R3 or R4, Requirement R5 requires Protection System owner(s) to develop a CAP, or explain why corrective actions are beyond the entity's control or would not improve BES reliability. The entity must develop the CAP or make a declaration why additional actions are beyond the entity's control or would not improve BES reliability and that no further corrective actions will be taken within 60 calendar days of first determining a cause.

The SMEs developing this standard recognize there may be multiple causes for a Misoperation. In these circumstances, the CAP would include a remedy for the identified causes. The CAP may be revised if additional causes are found; therefore, the entity has the option to create a single or multiple CAP(s) to correct multiple causes of a Misoperation. The 60 calendar day period for developing a CAP (or declaration) is established on the basis of industry experience which includes operational coordination timeframes, time to consider alternative solutions, coordination of resources, and development of a schedule.

The development of a CAP is intended to document the specific corrective actions needed to be taken to prevent Misoperation recurrence, the timetable for executing such actions, and an evaluation of the CAP's applicability to the entity's other Protection Systems including other locations. The evaluation of these other Protection Systems aims to reduce the risk and likelihood of similar Misoperations in other Protection Systems. The Protection System owner is responsible for determining the extent of its evaluation concerning other Protection Systems and locations. The evaluation may result in the owner including actions to address Protection Systems at other locations or the reasoning for not taking any action. The CAP and an evaluation of other Protection Systems including other locations must be developed to complete Requirement R5.

The following is an example of a CAP for a relay Misoperation that was applying a standing trip due to a failed capacitor within the relay and the evaluation of the cause at similar locations which determined capacitor replacement was not necessary.

For completion of each CAP in Examples R5a through R5d, please see Examples R6a through R6d.

> **Example R5a:** Actions: Remove the relay from service. Replace capacitor in the relay. Test the relay. Return to service or replace by 07/01/2014.
>
> Applicability to other Protection Systems: This type of impedance relay has not been experiencing problems and is systematically being replaced with microprocessor relays as Protection Systems are modernized. Therefore, it was assessed that a program for wholesale preemptive replacement of capacitors in this type of impedance relay does not need to be established for the system.

The following is an example of a CAP for a relay Misoperation that was applying a standing trip due to a failed capacitor within the relay and the evaluation of the cause at similar locations which determined the capacitors need preemptive correction action.

> **Example R5b:** Actions: Remove the relay from service. Replace capacitor in the relay. Test the relay. Return to service or replace by 07/01/2014.
>
> Applicability to other Protection Systems: This type of impedance relay is suspected to have previously tripped at other locations because of the same type of capacitor issue. Based on the evaluation, a program should be established by 12/01/2014 for wholesale preemptive replacement of capacitors in this type of impedance relay.

The following is an example of a CAP for a relay Misoperation that was applying a standing trip due to a failed capacitor within the relay and the evaluation of the cause at similar locations which determined the capacitors need preemptive correction action.

> **Example R5c:** Actions: Remove the relay from service. Replace capacitor in the relay. Test the relay. Return to service or replace by 07/01/2014.
>
> Applicability to other Protection Systems: This type of impedance relay is suspected to have previously tripped at other locations because of the same type of capacitor issue. Based on the evaluation, the preemptive replacement of capacitors in this type of impedance relay should be pursued for the identified stations A through I by 04/30/2015.
>
> A plan is being developed to replace the impedance relay capacitors at stations A, B, and C by 09/01/2014. A second plan is being developed to replace the impedance relay capacitors at stations D, E, and F by 11/01/2014. The last plan will replace the impedance relay capacitors at stations G, H, and I by 02/01/2015.

The following is an example of a CAP for a relay Misoperation that was due to a version 2 firmware problem and the evaluation of the cause at similar locations which determined the firmware needs preemptive correction action.

> **Example R5d:** Actions: Provide the manufacturer fault records. Install new firmware pending manufacturer results by 10/01/2014.
>
> Applicability to other Protection Systems: Based on the evaluation of other locations and a risk assessment, the newer firmware version 3 should be installed at all installations that are identified to be version 2. Twelve relays were identified across the system. Proposed completion date is 12/31/2014.

The following are examples of a declaration made where corrective actions are beyond the entity's control or would not improve BES reliability and that no further corrective actions will be taken.

> **Example R5e:** The cause of the Misoperation was due to a non-registered entity communications provider problem.
>
> **Example R5f:** The cause of the Misoperation was due to a transmission transformer tapped industrial customer who initiated a direct transfer trip to a registered entity's transmission breaker.

In situations where a Misoperation cause emanates from a non-registered outside entity, there may be limited influence an entity can exert on an outside entity and is considered outside of an entity's control.

The following are examples of declarations made why corrective actions would not improve BES reliability.

> **Example R5g:** The investigation showed that the Misoperation occurred due to transients associated with energizing transformer ABC at Station Y. Studies show that de-sensitizing the relay to the recorded transients may cause the relay to fail to operate as intended during power system oscillations.
>
> **Example R5h:** As a result of an operation that left a portion of the power system in an electrical island condition, circuit XYZ within that island tripped, resulting in loss of load within the island. Subsequent investigation showed an overfrequency condition persisted after the formation of that island and the XYZ line protective relay operated. Since this relay was operating outside of its designed frequency range and would not be subject to this condition when line XYZ is operated normally connected to the BES, no corrective action will be taken because BES reliability would not be improved.
>
> **Example R5i:** During a major ice storm, four of six circuits were lost at Station A. Subsequent to the loss of these circuits, a skywire (i.e., shield wire) broke near station A on line AB (between Station A and B) resulting in a phase-phase Fault. The protection scheme utilized for both protection groups is a permissive overreaching transfer trip (POTT). The Line AB protection at Station B tripped timed for this event (i.e., Slow Trip – During Fault) even though this line had been identified as requiring high speed clearing. A weak infeed condition was created at Station A due to the loss of 4 transmission circuits resulting in the absence of a permissive signal on Line AB from Station A during this Fault. No corrective action will be taken for this Misoperation as even under N-1 conditions, there is normally enough infeed at Station A to send a proper permissive signal to station B. Any changes to the protection scheme to account for this would not improve BES reliability.

A declaration why corrective actions are beyond the entity's control or would not improve BES reliability should include the Misoperation cause and the justification for taking no corrective action. Furthermore, a declaration that no further corrective actions will be taken is expected to be used sparingly.

Requirement R6

To achieve the stated purpose of this standard, which is to identify and correct the causes of Misoperations of Protection Systems for BES Elements, the responsible entity is required to implement a CAP that addresses the specific problem (i.e., cause(s) of the Misoperation) through completion. Protection System owners are required in the implementation of a CAP to update it when actions or timetable change, until completed. Accomplishing this objective is intended to reduce the occurrence of future Misoperations of a similar nature, thereby improving reliability and minimizing risk to the BES.

The following is an example of a completed CAP for a relay Misoperation that was applying a standing trip (See also, Example R5a).

> **Example R6a:** Actions: The impedance relay was removed from service on 06/02/2014 because it was applying a standing trip. A failed capacitor was found within the impedance relay and replaced. The impedance relay functioned properly during testing after the capacitor was replaced. The impedance relay was returned to service on 06/05/2014.
>
> CAP completed on 06/25/2014.

The following is an example of a completed CAP for a relay Misoperation that was applying a standing trip that resulted in the correction and the establishment of a program for further replacements (See also, Example R5b).

> **Example R6b:** Actions: The impedance relay was removed from service on 06/02/2014 because it was applying a standing trip. A failed capacitor was found within the impedance relay and replaced. The impedance relay functioned properly during testing after the capacitor was replaced. The impedance relay was returned to service on 06/05/2014.
>
> A program for wholesale preemptive replacement of capacitors in this type of impedance relay was established on 10/28/2014.
>
> CAP completed on 10/28/2014.

The following is an example of a completed CAP of corrective actions with a timetable that required updating for a failed relay and preemptive actions for similar installations (See also, Example R5c).

> **Example R6c:** Actions: The impedance relay was removed from service on 06/02/2014 because it was applying a standing trip. A failed capacitor was found within the impedance relay and replaced. The impedance relay functioned properly during testing after the capacitor was replaced. The impedance relay was returned to service on 06/05/2014.
>
> The impedance relay capacitor replacement was completed at stations A, B, and C on 08/16/2014. The impedance relay capacitor replacement was completed at stations D, E, and F on 10/24/2014. The impedance relay capacitor replacement for stations G, H, and I were postponed due to resource rescheduling from a scheduled 02/01/15 completion to 04/01/2015 completion. Capacitor replacement was completed on 03/09/2015 at stations G, H, and I. All stations identified in the evaluation have been completed.
>
> CAP completed on 03/09/2015.

The following is an example of a completed CAP for corrective actions with updated actions for a firmware problem and preemptive actions for similar installations. (See also, Example R5d).

> **Example R6d:** Actions: fault records were provided to the manufacturer on 06/04/2014. The manufacturer responded that the Misoperation was caused by a bug in version 2 firmware, and recommended installing version 3 firmware. Version 3 firmware was installed on 08/12/2014.
>
> Nine of the twelve relays were updated to version 3 firmware on 09/23/2014. The manufacturer provided a subsequent update which was determined to be beneficial for the remaining relays. The remaining three of twelve relays identified as having the version 2 firmware were updated to version 3.01 firmware on 11/10/2014.
>
> CAP completed on 11/10/2014.

The CAP is complete when all of the actions identified within the CAP have been completed.

Process Flow Chart: Below is a graphical representation demonstrating the relationships between Requirements:

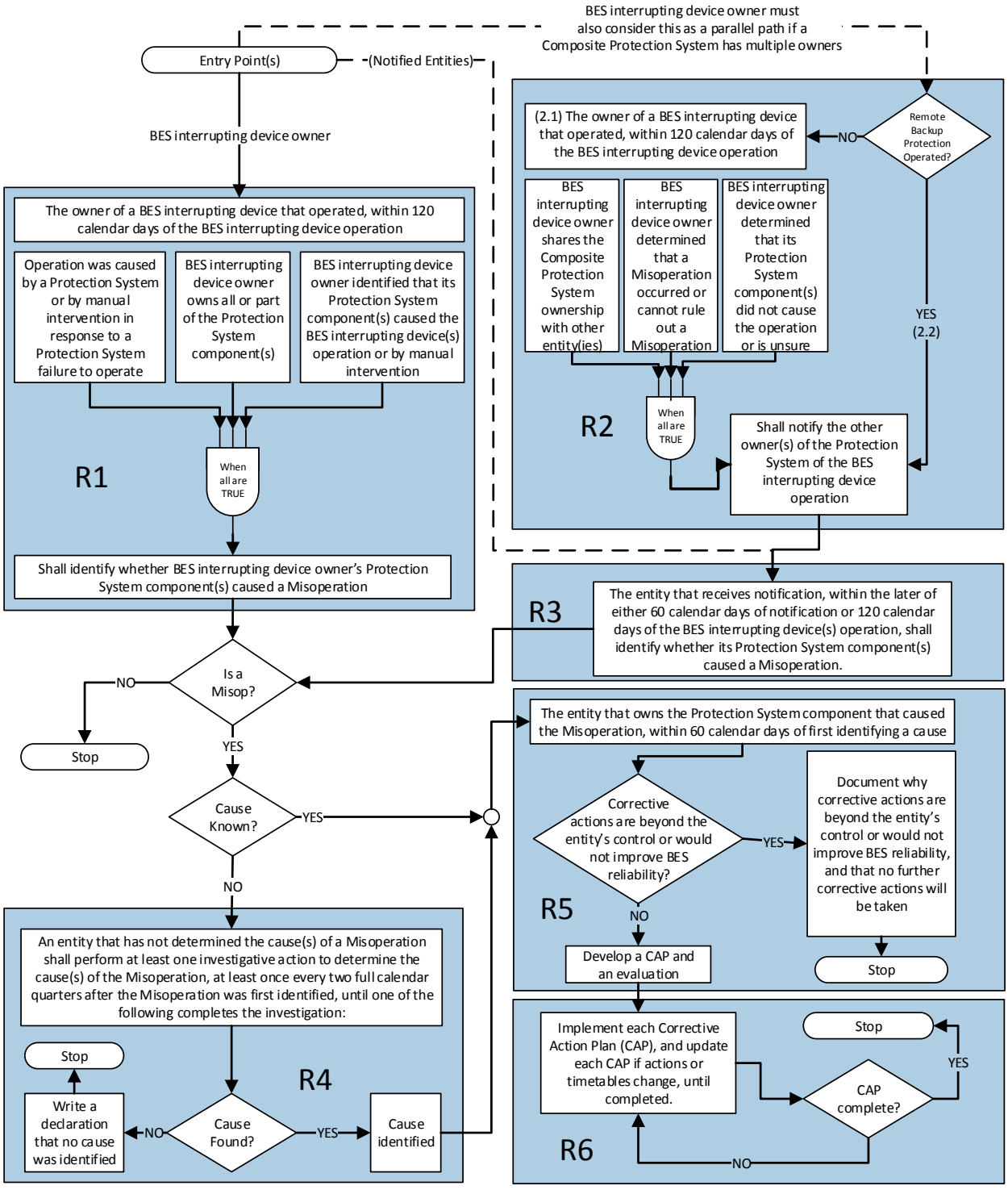

Rationale:

During development of this standard, text boxes were embedded within the standard to explain the rationale for various parts of the standard. Upon BOT approval, the text from the rationale text boxes was moved to this section.

Rationale for Introduction:

The only revisions made to this version of PRC-004-4 are revisions to section 4.2 Facilities to clarify applicability of the Requirements of the standard at generator Facilities. These applicability revisions are intended to clarify and provide for consistent application of the Requirements to BES generator Facilities included in the BES through Inclusion I4 – Dispersed Power Producing Resources.

The DGR version of this standard had been labeled PRC-004-4 for balloting purposes. The 'X' had indicated that a version number would be applied at a later time, because multiple versions of PRC-004 were in development at the time of the previous posting. The 'X' designation reflected the fact that applicability changes need to apply to versions of the standard that are approved (PRC-004-2.1a) and in development in Project 2010-05.1. However, PRC-004-3 was approved by the NERC Board of Trustees on August 14, 2014, so this version has been designated PRC-004-4 to indicate that this version is the successor version.

Rationale for Applicability:

Misoperations occurring on the Protection Systems of individual generation resources identified under Inclusion I4 of the BES definition do not have a material impact on BES reliability when considered individually; however, the aggregate capability of these resources may impact BES reliability if a number of Protection Systems on the individual power producing resources incorrectly operated or failed to operate as designed during a system event. To recognize the potential for the Protection Systems of individual power producing resources to affect the reliability of the BES, 4.2.1.5 of the Facilities section reflects the threshold consistent with the revised BES definition. See FERC Order Approving Revised Definition, P 20, Docket No. RD14-2-000. The intent of 4.2.1.5 of the Facilities section is to exclude from the standard requirements these Protection Systems for "common- mode failure" type scenarios affecting less than or equal to 75 MVA aggregated nameplate generating capability at these dispersed generating facilities.

NERC
NORTH AMERICAN ELECTRIC RELIABILITY CORPORATION

Implementation Plan

PRC-004-5 – Protection System Misoperation Identification and Correction

Project 2008-02.2 – Phase 2 UVLS: Misoperations

Requested Approvals

- PRC-004-5 – Protection System Misoperation Identification and Correction

Requested Retirements

- PRC-004-4 – Protection System Misoperation Identification and Correction[1]

Prerequisite Approvals

- PRC-010-2 – Undervoltage Load Shedding

General Considerations

The implementation period is intended to align with the Effective Date of PRC-010-1 or occurring soon thereafter in order to incorporate certain aspects of PRC-022-1 – Under-Voltage Load Shedding Program Performance into PRC-004. PRC-022-1 was retired by PRC-010-1. The Implementation Plan for PRC-010-1[2] allows twelve (12) calendar months after applicable approvals. Version five of PRC-004 is including undervoltage load shedding (UVLS) that is intended to trip one or more BES Elements.

Applicable Entities

- Transmission Owner
- Generator Owner
- Distribution Provider

[1] PRC-004-4 was adopted by the NERC Board of Trustees on November 13, 2014. PRC-004-4 is pending adoption or approval by applicable governmental authorities. PRC-004-5 will retire PRC-004-3 if PRC-004-4 is not adopted or approved by an applicable governmental authority.

[2] Refer to Project 2008-02.2 on the NERC website. (http://www.nerc.com/pa/Stand/Pages/Project-2008-02_2-Phase-2-Undervoltage-Load-Shedding-UVLS-Misoperations.aspx)

Effective Dates

PRC-004-5 shall become effective on the later of the first day following the Effective Date of PRC-010-1 or the first day of the first calendar quarter after the standard is approved by an applicable governmental authority or as otherwise provided for in a jurisdiction where approval by an applicable governmental authority is required for a standard to go into effect. Where approval by an applicable governmental authority is not required, the standard shall become effective on the later of the first day following the Effective Date of PRC-010-1 or the first day of the first calendar quarter after the date the standard is adopted by the NERC Board of Trustees or as otherwise provided for in that jurisdiction.

Standard Development Timeline

This section is maintained by the drafting team during the development of the standard and will be removed when the standard becomes effective.

Development Steps Completed

1. The NERC Board of Trustees adopted PRC-010-1 on November 13, 2014.
2. The NERC Standards Committee authorized the initial posting on February 18, 2015.

Description of Current Draft

The UVLSSDT is posting Draft 1 of PRC-010-2 – Undervoltage Load Shedding for a 45-day initial formal comment period and concurrent/parallel initial ballot in the last ten days of the comment period. The draft contains revisions to Requirements R4 and R5 to address UVLS equipment.

Anticipated Actions	Date
45-day formal comment period with ballot	February 2015
10-day final ballot	April 2015
Board adoption	May 2015

Project Development Background

The undervoltage load shedding (UVLS) standard drafting team (SDT) was tasked with addressing Misoperation of UVLS equipment during the development of version one of PRC-010 and version three of PRC-004 in Project 2010-05.1 (i.e., Misoperation). This project has been named phase 2 of Project 2008-02 (i.e., UVLS) for clarity purposes. Each SDT for these two projects outlined work necessary to address Misoperation of UVLS equipment. This work was deferred, at the time, because both PRC-010-1 and PRC-004-3 contained dependencies with other projects requiring their completion. This phase two is a continuation of the work performed under the Standards Authorization Request (SAR) for Project 2008-02.

The revisions proposed in Reliability Standard PRC-010-2 meet the following objectives:

- Address the UVLS Misoperation the remaining work due to the retirement of PRC-022-1 (Undervoltage Load Shedding Program Performance) during the development of PRC-010-1 (Undervoltage Load Shedding)
- Ensure UVLS equipment (i.e., operation or non-operation) within the UVLS Program is assessed and mitigated

Basis for Revision

Originally, Misoperation of UVLS equipment was planned to be appended to a future version of PRC-004 (Protection System Misoperation Identification and Correction). The SDT is proposing a two-prong approach by revising both PRC-004 and PRC-010 to address the concern of identifying Misoperations of UVLS equipment in PRC-022-1.

First, the SDT proposes an addition to the Applicability section of PRC-004 to include UVLS that is intended to trip one or more Bulk Electric System (BES) Elements. This is consistent with previous communication to industry about addressing Misoperation of UVLS equipment. Entities will be required to address UVLS that trips a BES Element similarly to other Protection Systems in PRC-004. While the revision to PRC-004 consistent with the communicated approach, the SDT determined that the proposed revision fails to address the performance (operation or non-operations) of UVLS Program equipment not covered by the strict processes of PRC-004.

Second, the SDT is proposing clarifying revisions in PRC-010-2, Requirements R4 and R5 to address UVLS Program equipment performance. These revisions are not requiring UVLS entities to address UVLS protective relays not covered by the strict processes of PRC-004; however, PRC-010-2 is requiring UVLS entities to address the deficiencies (e.g., Misoperations) identified in the assessment performed by Planning Coordinator or Transmission Planner in Requirement R4. Deficiencies include the performance (operation or non-operation) issues of UVLS Program equipment. These deficiencies, if any, are addressed by the UVLS entities through a Corrective Action Plan (CAP) developed in Requirement R5 and executed by the UVLS entities in Requirement R2 of PRC-010.

The term “Misoperation” as defined by the Glossary of Terms Used in NERC Reliability Standards is not used within the Requirements of PRC-010; however, the term is used in the Guidelines and Technical Basis section of the standard to provide clarity that UVLS Program equipment deficiencies include Misoperations that are to be corrected by UVLS entities. The PRC-010-2 Reliability Standard mandates that UVLS entities are to correct the deficiencies identified by the Planning Coordinator or Transmission Planner, such as Misoperation of UVLS equipment. Deficiencies are identified through either the periodic assessment or an assessment performed following an event and included in a CAP to the UVLS entity. The structure used by the SDT allows the Planning Coordinator and Transmission Planner to assess UVLS equipment for Misoperation under PRC-010 rather than the Generator Owner, Transmission Owner, and Distribution Provider applicable to the strict processes of PRC-004.

The two-pronged approach ensures that any UVLS Program equipment containing a deficiency is identified and corrected under PRC-010 and UVLS that trips a BES Element under is corrected under PRC-004 to address the requirements in the retired PRC-022-1.

When this standard receives Board adoption, the rationale boxes in the Supplemental Material section of the standard will remain. The rationale box for Requirement R5 will be removed.

A. Introduction

1. **Title:** Undervoltage Load Shedding

2. **Number:** PRC-010-2

3. **Purpose:** To establish an integrated and coordinated approach to the design, evaluation, and reliable operation of Undervoltage Load Shedding Programs (UVLS Programs).

4. **Applicability:**

   4.1. Functional Entities:

   4.1.1 Planning Coordinator.

   4.1.2 Transmission Planner.

   4.1.3 Undervoltage load shedding (UVLS) entities – Distribution Providers and Transmission Owners responsible for the ownership, operation, or control of UVLS equipment as required by the UVLS Program established by the Transmission Planner or Planning Coordinator.

5. **Effective Date:** See Project 2008-02.2 Implementation Plan.

B. Requirements and Measures

R1. Each Planning Coordinator or Transmission Planner that is developing a UVLS Program shall evaluate its effectiveness and subsequently provide the UVLS Program's specifications and implementation schedule to the UVLS entities responsible for implementing the UVLS Program. The evaluation shall include, but is not limited to, studies and analyses that show: *[Violation Risk Factor: High] [Time Horizon: Long-term Planning]*

1.1. The implementation of the UVLS Program resolves the identified undervoltage issues that led to its development and design.

1.2. The UVLS Program is integrated through coordination with generator voltage ride-through capabilities and other protection and control systems, including, but not limited to, transmission line protection, autoreclosing, Remedial Action Schemes, and other undervoltage-based load shedding programs.

M1. Acceptable evidence may include, but is not limited to, date-stamped studies and analyses, reports, or other documentation detailing the effectiveness of the UVLS Program, and date-stamped communications showing that the UVLS Program specifications and implementation schedule were provided to UVLS entities.

R2. Each UVLS entity shall adhere to the UVLS Program specifications and implementation schedule determined by its Planning Coordinator or Transmission Planner associated

with UVLS Program development per Requirement R1 or with any Corrective Action Plans per Requirement R5. *[Violation Risk Factor: High] [Time Horizon: Long-term Planning]*

M2. Acceptable evidence must include date-stamped documentation on the completion of actions and may include, but is not limited to, identifying the equipment armed with UVLS relays, the UVLS relay settings, associated Load summaries, work management program records, work orders, and maintenance records.

R3. Each Planning Coordinator or Transmission Planner shall perform a comprehensive assessment to evaluate the effectiveness of each of its UVLS Programs at least once every 60 calendar months. Each assessment shall include, but is not limited to, studies and analyses that evaluate whether: *[Violation Risk Factor: Medium] [Time Horizon: Long-term Planning]*

3.1. The UVLS Program resolves the identified undervoltage issues for which the UVLS Program is designed.

3.2. The UVLS Program is integrated through coordination with generator voltage ride-through capabilities and other protection and control systems, including, but not limited to, transmission line protection, autoreclosing, Remedial Action Schemes, and other undervoltage-based load shedding programs.

M3. Acceptable evidence may include, but is not limited to, date-stamped reports or other documentation detailing the assessment of the UVLS Program.

Rationale for Requirement R4: Refer to the Supplemental Section at the end of the document for the rationale.

R4. Each Planning Coordinator or Transmission Planner shall, within 12 calendar months of an event that resulted in a voltage excursion for which its UVLS Program was designed to operate, perform an assessment to evaluate: *[Violation Risk Factor: Medium] [Time Horizon: Operations Planning]*

4.1. Whether its UVLS Program resolved the undervoltage issues associated with the event, and

4.2. The performance (i.e., operation and non-operation) of the UVLS Program equipment.

M4. Acceptable evidence may include, but is not limited to, date-stamped event data, event analysis reports, or other documentation detailing the assessment of the UVLS Program and associated equipment.

R5. Each Planning Coordinator or Transmission Planner that identifies deficiencies during an assessment performed in either Requirement R3 or R4 shall develop a Corrective Action Plan to address the deficiencies and subsequently provide the Corrective Action Plan, including an implementation schedule, to UVLS entities within three

calendar months of completing the assessment. *[Violation Risk Factor: Medium] [Time Horizon: Operations Planning]*

M5. Acceptable evidence must include a date-stamped Corrective Action Plan that addresses identified deficiencies and may also include date-stamped reports or other documentation supporting the Corrective Action Plan. Evidence should also include date-stamped communications showing that the Corrective Action Plan and an associated implementation schedule were provided to UVLS entities.

R6. Each Planning Coordinator that has a UVLS Program in its area shall update a database containing data necessary to model the UVLS Program(s) in its area for use in event analyses and assessments of the UVLS Program at least once each calendar year. *[Violation Risk Factor: Lower] [Time Horizon: Operations Planning]*

M6. Acceptable evidence may include, but is not limited to, date-stamped spreadsheets, database reports, or other documentation demonstrating a UVLS Program database was updated.

R7. Each UVLS entity shall provide data to its Planning Coordinator according to the format and schedule specified by the Planning Coordinator to support maintenance of a UVLS Program database. *[Violation Risk Factor: Lower] [Time Horizon: Operations Planning]*

M7. Acceptable evidence may include, but is not limited to, date-stamped emails, letters, or other documentation demonstrating data was provided to the Planning Coordinator as specified.

R8. Each Planning Coordinator that has a UVLS Program in its area shall provide its UVLS Program database to other Planning Coordinators and Transmission Planners within its Interconnection, and other functional entities with a reliability need, within 30 calendar days of a written request. *[Violation Risk Factor: Lower] [Time Horizon: Operations Planning]*

M8. Acceptable evidence may include, but is not limited to, date-stamped emails, letters, or other documentation demonstrating that the UVLS Program database was provided within 30 calendar days of receipt of a written request.

C. Compliance

1. Compliance Monitoring Process

1.1. Compliance Enforcement Authority

As defined in the NERC Rules of Procedure, “Compliance Enforcement Authority” means NERC or the Regional Entity in their respective roles of monitoring and enforcing compliance with the NERC Reliability Standards.

1.2. Evidence Retention

The following evidence retention periods identify the period of time an entity is required to retain specific evidence to demonstrate compliance. For

instances where the evidence retention period specified below is shorter than the time since the last audit, the Compliance Enforcement Authority may ask an entity to provide other evidence to show that it was compliant for the full-time period since the last audit.

The Planning Coordinator, Transmission Planner, Distribution Provider, and Transmission Owner shall keep data or evidence to show compliance as identified below unless directed by its Compliance Enforcement Authority to retain specific evidence for a longer period of time as part of an investigation.

The applicable entity shall retain documentation as evidence for six calendar years.

If an applicable entity is found non-compliant, it shall keep information related to the non-compliance until mitigation is complete and approved, or for the time specified above, whichever is longer.

The Compliance Enforcement Authority shall keep the last audit records and all requested and submitted subsequent audit records.

1.3. Compliance Monitoring and Assessment Processes:

"Compliance Monitoring and Assessment Processes" refers to the identification of the processes that will be used to evaluate data or information for the purpose of assessing performance or outcomes with the associated reliability standard.

1.4. Additional Compliance Information

None.

Table of Compliance Elements

R #	Time Horizon	VRF	Violation Severity Levels			
			Lower VSL	Moderate VSL	High VSL	Severe VSL
R1	Long-term Planning	High	N/A	N/A	N/A	The applicable entity that developed the UVLS Program failed to evaluate the program's effectiveness and subsequently provide the UVLS Program's specifications and implementation schedule to UVLS entities in accordance with Requirement R1, including the items specified in Parts 1.1 and 1.2.

R #	Time Horizon	VRF	Violation Severity Levels			
			Lower VSL	Moderate VSL	High VSL	Severe VSL
R2	Long-term Planning	High	N/A	N/A	The applicable entity failed to adhere to the UVLS Program specifications in accordance with Requirement R2. OR The applicable entity failed to adhere to the implementation schedule in accordance with Requirement R2.	The applicable entity failed to adhere to the UVLS Program specifications and implementation schedule in accordance with Requirement R2.
R3	Long-term Planning	Medium	N/A	N/A	N/A	The applicable entity failed to perform an assessment at least once during the 60 calendar months in accordance with Requirement R3, including the items specified in Parts 3.1 and 3.2.

R #	Time Horizon	VRF	Violation Severity Levels			
			Lower VSL	Moderate VSL	High VSL	Severe VSL
R4	Operations Planning	Medium	The applicable entity performed an assessment in accordance with Requirement R4 within a time period greater than 12 calendar months but less than or equal to 13 calendar months after an applicable event.	The applicable entity performed an assessment in accordance with Requirement R4 within a time period greater than 13 calendar months but less than or equal to 14 calendar months after an applicable event.	The applicable entity performed an assessment in accordance with Requirement R4 within a time period greater than 14 calendar months but less than or equal to 15 calendar months after an applicable event.	The applicable entity performed an assessment in accordance with Requirement R4 within a time period greater than 15 calendar months after an applicable event. OR The applicable entity failed to perform an assessment in accordance with Requirement R4.

R #	Time Horizon	VRF	Violation Severity Levels			
			Lower VSL	Moderate VSL	High VSL	Severe VSL
R5	Operations Planning	Medium	The applicable entity developed a Corrective Action Plan and provided it to UVLS entities in accordance with Requirement R5 but was late by less than or equal to 15 calendar days.	The applicable entity developed a Corrective Action Plan and provided it to UVLS entities in accordance with Requirement R5 but was late by more than 15 calendar days but less than or equal to 30 calendar days.	The applicable entity developed a Corrective Action Plan and provided it to UVLS entities in accordance with Requirement R5 but was late by more than 30 calendar days but less than or equal to 45 calendar days.	The applicable entity developed a Corrective Action Plan and provided it to UVLS entities in accordance with Requirement R5 but was late by more than 45 calendar days. OR The responsible entity failed to develop a Corrective Action Plan or provide it to UVLS entities in accordance with Requirement R5.

R #	Time Horizon	VRF	Violation Severity Levels			
			Lower VSL	Moderate VSL	High VSL	Severe VSL
R6	Operations Planning	Lower	The applicable entity updated the database in accordance with Requirement R6 but was late by less than or equal to 30 calendar days.	The applicable entity updated the database in accordance with Requirement R6 but was late by more than 30 calendar days but less than or equal to 60 calendar days.	The applicable entity updated the database in accordance with Requirement R6 but was late by more than 60 calendar days but less than or equal to 90 calendar days.	The applicable entity updated the database in accordance with Requirement R6 but was late by more than 90 calendar days. OR The applicable entity failed to update the database in accordance with Requirement R6.

R #	Time Horizon	VRF	Violation Severity Levels			
			Lower VSL	Moderate VSL	High VSL	Severe VSL
R7	Operations Planning	Lower	The applicable entity provided data in accordance with Requirement R7 but was late by less than or equal to 30 calendar days per the specified schedule. OR The applicable entity provided data in accordance with Requirement R7 but the data was not provided according to the specified format.	The applicable entity provided data in accordance with Requirement R7 but was late by more than 30 calendar days but less than or equal to 60 calendar days per the specified schedule.	The applicable entity provided data in accordance with Requirement R7 but was late by more than 60 calendar days but less than or equal to 90 calendar days per the specified schedule.	The applicable entity provided data in accordance with Requirement R7 but was late by more than 90 calendar days per the specified schedule. OR The applicable entity failed to provide data in accordance with Requirement R7.

R #	Time Horizon	VRF	Violation Severity Levels			
			Lower VSL	Moderate VSL	High VSL	Severe VSL
R8	Operations Planning	Lower	The applicable entity provided its UVLS Program database in accordance with Requirement R8 but was late by less than or equal to 15 calendar days.	The applicable entity provided its UVLS Program database in accordance with Requirement R8 but was late by more than 15 calendar days but less than or equal to 30 calendar days.	The applicable entity provided its UVLS Program database in accordance with Requirement R8 but was late by more than 30 calendar days but less than or equal to 45 calendar days.	The applicable entity provided its UVLS Program database in accordance with Requirement R8 but was late by more than 45 calendar days. OR The applicable entity failed to provide its UVLS Program database in accordance with Requirement R8.

D. Regional Variances

None.

E. Interpretations

None.

F. Associated Documents

None.

Version History

Version	Date	Action	Change Tracking
0	February 8, 2005	Adopted by NERC Board of Trustees	
0	April 1, 2005	Effective Date	
0	February 7, 2013	Adopted by NERC Board of Trustees	R2 and associated elements for retirement as part of the Paragraph 81 project (Project 2013-02) pending applicable regulatory approval.
1	November 13, 2014	Adopted by NERC Board of Trustees	Revisions made under Project 2008-02: Undervoltage Load Shedding (UVLS) & Underfrequency Load Shedding (UFLS) to address directive issued in FERC Order No. 763.
2		Adopted by NERC Board of Trustees	Revisions made under Project 2008-02.2: Undervoltage Load Shedding (UVLS): Misoperation to include UVLS equipment.

Guidelines and Technical Basis

Introduction

The standard drafting team provides the following discussion to support the approach to the standard. The information is meant to enhance the understanding of the reliability needs and deliverable expectations of each requirement, supported as necessary by technical principles and industry experience.

Guidelines for UVLS Program Definition

The definition for the term, “Undervoltage Load Shedding Program” or “UVLS Program” includes automatic load shedding programs that utilize only voltage inputs at locations where action is taken to shed load. As such, the failure of a single component is unlikely to affect the reliable operation of the program.

The UVLS Program definition excludes centrally controlled undervoltage-based load shedding, which utilizes inputs from multiple locations and may also utilize inputs other than voltages (such as generator reactive reserves, facility loadings, equipment statuses, etc.). The design and characteristics of a centrally controlled undervoltage-based load shedding system are the same as that of a Remedial Action Scheme (RAS), wherein load shedding is the remedial action. Therefore, just like for a RAS, the failure of a single component can compromise the reliable operation of centrally controlled undervoltage-based load shedding.

To ensure that the applicability of the standard includes only those undervoltage-based load shedding systems whose performance has an impact on system reliability, a UVLS Program must mitigate risk of one or more of the following: voltage instability, voltage collapse, or Cascading impacting the Bulk Electric System (BES). An example of a program that would not fall under this category is undervoltage-based load shedding installed to mitigate damage to equipment or local loads that are directly affected by the low voltage event.

Figure 1 below is an example of a BES subsystem for which a UVLS system could be used as a solution to mitigate various issues following the loss of the 345 kV double circuit line between buses A and B. If the consequence of this Contingency does not impact the BES by leading to voltage instability, voltage collapse, or Cascading, a UVLS system (installed at either, or both, bus B and D) used to mitigate this Contingency would not fall under the definition of a UVLS Program. However, if this same UVLS system is used to mitigate an Adverse Reliability Impact outside this contained area, it would be classified as a wide-area undervoltage problem and would fall under the definition of UVLS Program.

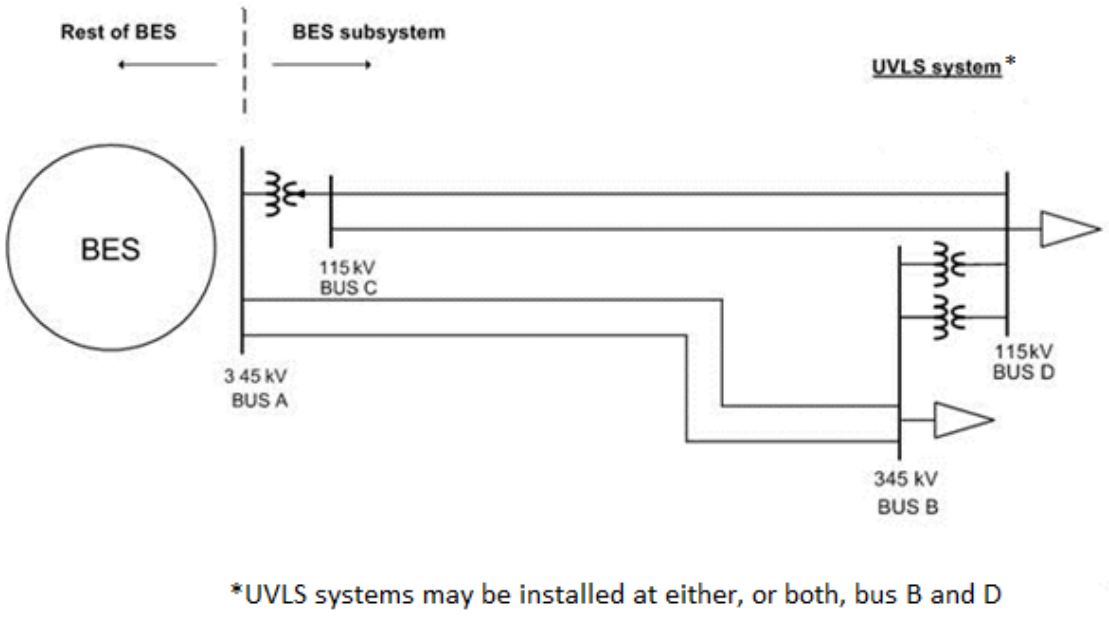

Figure 1: UVLS Subsystem

Guidelines for Requirements

Table 1 provides a high-level overview of the requirements contained in the standard.

Table 1: High-Level Requirement Overview

Requirement	Entity	Evaluate Program Effectiveness	Adhere to Program Specifications and Schedule	Perform Program Assessment (Periodic or Performance)	Develop a CAP to Address Program Deficiencies	Update and/or Share Program Data
R1	PC or TP	X				
R2	UVLS entity		X			
R3	PC or TP	X		X		
R4	PC or TP	X		X		
R5	PC or TP				X	
R6	PC					X
R7	UVLS entity					X
R8	PC					X

Guidelines for Requirement R1

A UVLS Program may be developed and implemented to either serve as a safety net system protection measure against unforeseen extreme Contingencies or to achieve specific system performance for known transmission Contingencies for which dropping of load is allowed under Transmission Planning (TPL) Reliability Standards. Regardless of the purpose, it is important that the UVLS Program being implemented is effective in terms that it mitigates undervoltage conditions impacting the Bulk Electric System (BES), leading to voltage instability, voltage collapse, or Cascading. Consideration should be given to voltage set points and time delays, rate of voltage decay or recovery, power flow levels, etc. when designing a UVLS Program.

For the UVLS Program to be effective in achieving its goal, it is also necessary that the UVLS Program is coordinated with generator voltage ride-through capabilities and other protection and control systems that may have an impact on the performance of the UVLS Program. Some of these protection and control systems may include, but are not limited to, transmission line protection, RAS, other undervoltage-based load shedding programs, autoreclosing, and controls of shunt capacitors, reactors, and static voltampere-reactive systems (SVSs).

For example, if the purpose of a UVLS Program is to mitigate fault-induced delayed voltage recovery (FIDVR) events in a large load center that also includes local generation, it is important that such a UVLS Program is coordinated with local generators' voltage ride-through capabilities. Generators in the vicinity of a load center are critical to providing dynamic voltage support to the system during FIDVR events. To maximize the benefit of on-line generation, the best practice may be to shed load prior to generation trip. However, occasionally, it may be best to let generation trip prior to load shed. Therefore, the impact of generation tripping should be considered while designing a UVLS Program.

Another example that can be highlighted is the coordination of a UVLS Program with automatic shunt reactor tripping devices if there are any on the system. Most likely, any shunt reactors on the system will trip off automatically after some time delay during low voltage conditions. In such cases, shunt reactors should be tripped before the load is shed to preserve the system. This may require coordination of time delays associated with the UVLS Program with shunt reactor tripping devices.

The examples given above demonstrate that, for a UVLS Program to be effective, proper consideration should be given to coordination of a UVLS Program with generator ride-through capabilities and other protection and control systems.

Guidelines for Requirement R2

Once a Planning Coordinator (PC) or Transmission Planner (TP) has identified a need for a UVLS Program, the Planning Coordinator or Transmission Planner will develop a program that includes specifications and an implementation schedule, which are then provided to UVLS entities per Requirement R1. Specifications may include voltage set points, time delays, amount of load to be shed, and the location at which load needs to be shed. If UVLS entities do not implement the UVLS Program according to the specifications and schedule provided, the UVLS

Program may not be effective and may not achieve its intended goal. The UVLS entity must document that all necessary actions were completed to implement the UVLS Program.

Similarly, when a Corrective Action Plan (CAP) to address UVLS Program deficiencies is developed by the Planning Coordinator or Transmission Planner and provided to UVLS entities per Requirement R5, UVLS entities must comply with the CAP and its associated implementation schedule to ensure that the UVLS Program is effective. The UVLS entity is required to complete the actions specified in the CAP, document the plan implementation, and retain the appropriate evidence to demonstrate implementation and completion.

Deferrals or other relevant changes to the UVLS Program specifications or CAP need to be documented so that the record includes not only what was planned, but what was implemented. Depending on the planning and documentation format used by the responsible entity, evidence of a successful execution could consist of signed-off work orders, printouts from work management systems, spreadsheets of planned versus completed work, timesheets, work inspection reports, paid invoices, photographs, walk-through reports, or other evidence.

For example, documentation of a CAP provides an auditable progress and completion confirmation for the identified UVLS Program deficiency:

CAP Example 1 - Corrective actions for a quick triggering problem; preemptive actions for similar installations:

The PC or TP obtains fault records from a UVLS entity that participates in its UVLS Program that indicate a group of UVLS relays triggered at the appropriate undervoltage level but with shorter delays than expected. The PC or TP directed the UVLS entity to schedule on-site inspections within three weeks. The results of the inspection confirmed that the delay-time programmed on the relays was 60 cycles instead of 90 cycles. The PC or TP then directed the UVLS entity to correct to a 90-cycle time delay setting of the UVLS relays identified to have shorter time delay settings within eight weeks.

Applicability to other UVLS relays: The PC or TP then developed a schedule with the UVLS entity to verify and adjust all remaining UVLS relays time delay settings within a one-year period.

The PC or TP verified completion of verification and adjustment of the time delay settings for all of the UVLS entity's equipment that participates in the PC or TP UVLS Program

CAP Example 2 - Corrective actions for a firmware problem; preemptive actions for similar installations:

The PC or TP obtains fault records on 6/4/2014 from a UVLS entity that participates in its UVLS Program. The UVLS entity also provided the fault records to the manufacturer, who responded on 6/11/2014 that the Misoperation[1] of the UVLS relay was caused by a

[1] Misoperation of Protection Systems reporting was initiated by the NERC Board of Trustees adopted NERC Rules of Procedure, Section 1600, Request for Data or Information. Refer to: *Request for Data of Information, Protection System Misoperation Data Collection*, August 14, 2014. http://www.nerc.com/pa/RAPA/ProctectionSystem Misoperations/PRC-004-3%20Section%201600%20Data%20Request_20140729.pdf.

bug in version 2 firmware, and recommended installing version 3 firmware. The PC or TP approved the UVLS entity's plan to schedule Version 3 firmware installation on 6/12/2014.

Applicability to other UVLS relays: The PC or TP then developed a schedule with the UVLS entity to install firmware version 3 at all of the UVLS entity's UVLS relays that are determined to be programmed with version 2 firmware. The completion date was scheduled no-later-than 12/31/2014.

The firmware replacements were completed on 12/4/2014.

Guidelines for Requirement R3

In addition to the initial studies required to develop a UVLS Program, periodic comprehensive assessments (detailed analyses) are required to ensure its continued effectiveness. This assessment is required to be completed at least once every 60 calendar months to capture the accumulated effects of minor changes to the system that have occurred since the last assessment was completed. However, at any point in time, a Planning Coordinator or Transmission Planner may also determine that a material change[2] to system topology or operating conditions affects the performance of the UVLS Program and therefore necessitates the same comprehensive assessment. Regardless of the trigger, each assessment should include an evaluation of each UVLS Program to ensure the continued integration through coordination.

This comprehensive assessment complements the TPL-001-4 annual assessment requirement to evaluate the impact of protection systems. The 60-month period is the same time frame used in TPL-001-4 and in PRC-006-1.

As specified in Requirement R3, a comprehensive assessment must be performed at least once every 60 calendar months. If a Planning Coordinator or Transmission Planner conducts a comprehensive assessment sooner for the reasons discussed above, the 60-month time period would restart upon completion of this assessment.

Guidelines for Requirement R4

After a voltage excursion event, the goal of the assessment required in Requirement R4 is to evaluate: (1) whether the UVLS Program resolved the undervoltage issues, and (2) the performance of the UVLS Program equipment. The assessment should include event data analysis, such as the relevant sequence of events leading to the undervoltage conditions (e.g., Contingencies, operation of protection systems, and RAS) and field measurements useful to analyzing the behavior of the system. A comprehensive description of the UVLS Program operation should be presented, including conditions of the trigger (e.g., voltage levels, time

[2] It is understood that the term material change is not transportable on a continent-wide basis. This determination must be made by the Planning Coordinator or Transmission Planner and should be accompanied by documentation to support the technical rationale for determining material changes.

delays) and amount of load shed for each affected substation. Assessment of the event is performed to evaluate the level of performance of the program for the event of interest and to identify deficiencies to be included in a CAP per Requirement R5. Misoperation of UVLS equipment is addressed as a deficiency. Reporting of UVLS equipment Misoperations are addressed by the NERC *Request for Data and Information, Protection System Misoperation Data Collection*.[3]

The studies and analyses showing the effectiveness of the UVLS Program can be similar to what is required in Requirements R1 and R3, but should include a clear link between the evaluation of effectiveness (in studies using simulations) and the analysis of the event (with measurements and event data) that actually occurred. For example, differences between the expected and actual system behavior for the event of interest should be discussed and modeling assumptions should be evaluated. Important discrepancies between the simulations and the actual event should be investigated.

Considering the importance of an event that involves the operation of a UVLS Program, the 12-calendar-month period provides adequate time to analyze the event and perform an assessment while identifying deficiencies within a reasonable time. This time period is also required in PRC-006-1.

Guidelines for Requirement R5:

Requirement R5 promotes the prudent correction of an identified problem during the assessment of a UVLS Program. Per Requirements R3 and R4, an assessment of an active UVLS Program is triggered:

- Within 12 calendar months of an event that resulted in a voltage excursion for which the program was designed to operate
- At least once every 60 calendar months. The default time frame of 60 calendar months or less between assessments has the intention to assure that the cumulative changes to the network and operating condition affecting the UVLS Program are evaluated

Since every UVLS is unique, if material changes are made to system topology or operating conditions, the Planning Coordinator or Transmission Planner will decide the degree to which the change in topology or operating condition becomes a material change sufficient to trigger an assessment of the existing UVLS Program.

A CAP is a list of actions and an associated timetable for implementation to remedy a specific problem. It is a proven tool for resolving operational problems. Per Requirement R5, the Planning Coordinator or Transmission Planner is required to develop a CAP and provide it to UVLS entities to accomplish the purpose of this requirement, which is to prevent future deficiencies in the UVLS Program, thereby minimizing risk to the system. Determining the cause

[3] Id.

of the deficiency is essential in developing an effective CAP to avoid future re-occurrence of the same problem. A CAP can be revised if additional causes are found.

Based on industry experience and operational coordination timeframes, three calendar months from the date an assessment is completed is a reasonable time frame for development of a CAP, including time to consider alternative solutions and coordination of resources. The "within three calendar months" time frame is solely to develop a CAP, including its implementation schedule, and provide it to UVLS entities. It does not include the time needed for its implementation by UVLS entities. This implementation time frame is dictated within the CAP's associated timetable for implementation, and the execution of the CAP according to its schedule is required in Requirement R2.

Guidelines for Requirements R6–R8

An accurate UVLS Program database is necessary for the Planning Coordinator or Transmission Planner to perform system reliability assessment studies and event analysis studies. Without accurate data, there is a possibility that annual reliability assessment studies that are performed by the Planning Coordinator or Transmission Planner can lead to erroneous results and therefore impact reliability. Also, without the accurate data, it is very difficult for the Planning Coordinator or Transmission Planner to duplicate a UVLS event and determine the root cause of the problem.

To support a UVLS Program database, it is necessary for each UVLS entity to provide accurate data to its Planning Coordinator. Each UVLS entity will provide the data according to the specified format and schedule provided by the Planning Coordinator. This is required in order for the Planning Coordinator to maintain and support a comprehensive UVLS Program database. By having a comprehensive database, the Planning Coordinator can embark on a reliability assessment or event analysis/benchmarking studies, identify the issues with the UVLS Program, and develop Corrective Action Plans.

The UVLS Program database may include, but is not limited to the following:

- Owner and operator of the UVLS Program
- Size and location of customer load, or percent of connected load, to be interrupted
- Corresponding voltage set points and clearing times
- Time delay from initiation to trip signal
- Breaker operating times
- Any other schemes that are part of or impact the UVLS Programs, such as related generation protection, islanding schemes, automatic load restoration schemes, underfrequency load shedding (UFLS), and RAS

Additionally, the UVLS Program database is required to be updated annually (once every calendar year) by the Planning Coordinator. The intent here is for UVLS entities to review the data annually and provide changes to the Planning Coordinators so that Planning Coordinators

can keep the databases current and accurate for performing event analysis and other assessments.

Finally, a Planning Coordinator is required to provide information to other Planning Coordinators and Transmission Planners within its Interconnection, and other functional entities with a reliability need, within 30 calendar days of receipt of a written request. Thirty calendar days was selected as the time frame as it is considered to be reasonable and well-accepted by the industry. Also, this requirement of sharing the database with applicable functional entities supports the directive provided by FERC that requires an integrated and coordinated approach to UVLS programs (Paragraph 1509 of FERC Order No. 693).

Rationale

During development of this standard, text boxes were embedded within the standard to explain the rationale for various parts of the standard. Upon BOT approval, the text from the rationale text boxes was moved to this section.

Rationale for Applicability

This standard is applicable to Planning Coordinators and Transmission Planners that have or are developing a UVLS Program, and to Distribution Providers and Transmission Owners responsible for the ownership, operation, or control of UVLS equipment as required by the UVLS Program established by the Transmission Planner or Planning Coordinator. These Distribution Providers and Transmission Owners are referred to as UVLS entities for the purpose of this standard.

The applicability includes both the Planning Coordinator and Transmission Planner because either may be responsible for designing and coordinating the program based on agreements, memorandums of understanding, or tariffs.

The phrase “Planning Coordinator or Transmission Planner” provides the latitude for applicability to the entity that will perform the action. The expectation is not that both parties will perform the action, but rather that the Planning Coordinator and Transmission Planner will engage in discussion to determine the appropriate responsible entity.

Rationale for R1

In Paragraph 1509 from Order No. 693, FERC directed NERC to require an integrated and coordinated approach to all protection systems. The drafting team agrees that a lack of coordination among protection systems is a key risk to reliability, and that each Planning Coordinator or Transmission Planner that develops a UVLS Program should evaluate the program’s viability and effectiveness prior to implementation. This evaluation should include studies and analyses used when developing the program that show implementation of the program resolves the identified undervoltage conditions that led to its design. These studies and analyses should also show that the UVLS Program is integrated through coordination with generator voltage ride-through capabilities and other protection and control systems. Though presented as separate items, the drafting team recognizes that the studies that show coordination considerations and that the program addresses undervoltage issues may be interrelated and presented as one comprehensive analysis.

In addition, Requirement R1 also requires the Planning Coordinator or Transmission Planner to provide the UVLS Program’s specifications and implementation schedule to applicable UVLS entities to implement the program. It is noted that studies to evaluate the effectiveness of the program should be completed prior to providing the specifications and schedule.

Rationale for R2

UVLS entities must implement a UVLS Program or address any necessary corrective actions for a UVLS Program according to the specifications and schedule provided by the Planning Coordinator or Transmission Planner. If UVLS entities do not implement the UVLS Program according to the specifications and schedule provided, the UVLS Program may not be effective and may not achieve its intended goal.

Rationale for R3

A periodic comprehensive assessment (detailed analysis) should be conducted to identify and catalogue the accumulated effects of minor changes to the system that have occurred since the last assessment was completed, and should include an evaluation of each UVLS Program to ensure the continued integration through coordination. This comprehensive assessment supplements the NERC Reliability Standard TPL-001-4 annual assessment requirement to evaluate the impact of protection systems.

Based on the drafting team's knowledge and experience, and in keeping with time frames contained in similar requirements from other PRC Reliability Standards, 60 calendar months was determined to be the maximum amount of time allowable between assessments. Assessments will be performed sooner than the end of the 60-calendar month period if the Planning Coordinator or Transmission Planner determines that there are material changes to system topology or operating conditions that affect the performance of a UVLS Program. Note that the 60-calendar-month time frame would reset after each assessment.

Rationale for R4

A UVLS Program not functioning as expected during a voltage excursion event for which the UVLS Program was designed to operate presents a critical risk to system reliability. Therefore, a timely assessment to evaluate (1) whether the UVLS Program resolved the undervoltage issues and (2) the performance of the UVLS Program equipment associated with the applicable event is essential. The 12 calendar months (from the date of the event) provides adequate time to coordinate with other Planning Coordinators, Transmission Planners, Transmission Operators, and UVLS entities, simulate pre- and post-event conditions, and complete the performance assessment.

Rationale for R5

If program deficiencies are identified during an assessment performed in either Requirement R3 or R4, the Planning Coordinator or Transmission Planner must develop a Corrective Action Plan (CAP) to address the deficiencies. Based on the drafting team's knowledge and experience with UVLS studies, three calendar months was determined to provide a judicious balance between the reliability need to address deficiencies expeditiously and the time needed to consider potential solutions, coordinate resources, develop a CAP and implementation schedule, and provide the CAP and schedule to UVLS entities.

It is noted that the three-month time frame is only to develop the CAP and provide it to UVLS entities and does not encompass the time UVLS entities have to implement the CAP. Requirement R2 requires UVLS entities to execute the CAP according to the schedule provided by the Planning Coordinator or Transmission Planner.

Rationale for R6

Having accurate and current data is required for the Planning Coordinator to perform undervoltage studies and for use in event analyses. Requirement R6 supports this reliability need by requiring the Planning Coordinator to update its UVLS Program database at least once each calendar year.

Rationale for R7

Having accurate and current data is required for the Planning Coordinator to perform undervoltage studies and for use in event analyses. Requirement R7 supports this reliability need by requiring the UVLS entity to provide UVLS Program data in accordance with specified parameters.

Rationale for R8

Requirement R8 supports the integrated and coordinated approach to UVLS programs directed by Paragraph 1509 of Order No. 693 by requiring that UVLS Program data be shared with neighboring Planning Coordinators and Transmission Planners within a reasonable time period. Requests for the database should also be fulfilled for those functional entities that have a reliability need for the data (such as the Transmission Operators that develop System Operating Limits and Reliability Coordinators that develop Interconnection Reliability Operating Limits).

Frequently Asked Questions

To succinctly address common comment themes that require drafting team response on Project 2008-02 UVLS (proposed PRC-010-1), the drafting team provides the following discussion in the construct of an FAQ format.

Introduction

This Frequently Asked Questions (FAQ) document was created during the development of PRC-010-1 (*Undervoltage Load Shedding*)[4,5] to succinctly address common comment themes with respect to the approach and intent of the Project 2008-02 Undervoltage Load Shedding (UVLS)[6] standard drafting team ("drafting team"). This FAQ document is the outcome of comments received during comment periods and multiple outreach sessions with industry. All comments submitted by industry during comment periods may be reviewed on the project page.

Subsequent to the adoption of PRC-010-1, the UVLS drafting team made minor revisions to the standard address the UVLS Misoperation identification and correction.[7] This FAQ document was amended to reflect up the approach and intent of the drafting team during the development of PRC-010-2 concerning Misoperation of UVLS equipment.

Purpose of Standard Revision

1) What is the basis for a revision of the existing UVLS standards?

The initial input into a revision of the existing UVLS standards is FERC Order No. 693,[8] Paragraph 1509, which directed the ERO to develop a modification of PRC-010-0 that "requires that an integrated and coordinated approach be included in all protection systems on the Bulk-Power System, including generators and transmission lines, generators' low voltage ride through capabilities, and UFLS and UVLS programs." In addition, *The Final Report on the August 14, 2003 Blackout in the United States and Canada: Causes and Recommendations*[9] ("August 14 Blackout Report") showed that proper coordination would have mitigated effects if UVLS was used as a tool.

Additional inputs included 1) recommendations from the NERC System Protection and Control Subcommittee (SPCS) in its December 2010 *Technical Review of UVLS-Related Standards*[10] to combine the four existing UVLS standards, revise the applicability to entities responsible for UVLS program design, implementation, and coordination, specifically include a requirement for

[4] http://www.nerc.com/_layouts/PrintStandard.aspx?standardnumber=PRC-010-1&title=Undervoltage%20Load%20Shedding.
[5] Adopted by the NERC Board of Trustees on November 14, 2014.
[6] http://www.nerc.com/pa/Stand/Pages/Project-2008-02-Undervoltage-Load-Shedding.aspx
[7] Refer to Project 2010-05.1, which developed PRC-004-3 (Protection System Misoperation Identification and Correction) concurrently with the development of PRC-010-1. (http://www.nerc.com/pa/Stand/Pages/Project2010-05_Protection_System_Misoperations.aspx).
[8] http://www.nerc.com/docs/docs/ferc/order_693.pdf.
[9] http://energy.gov/sites/prod/files/oeprod/DocumentsandMedia/BlackoutFinal-Web.pdf.
[10] http://www.nerc.com/docs/pc/spctf/PRC-010_022%20Report_Approved_20101208.pdf.

assessment of coordination between UVLS programs and all other protection systems, and differentiate post-event validation of UVLS program design from verifying correct operation of UVLS equipment; 2) the existing UVLS standards were not in the current results-based format; 3) the preceding revision of the underfrequency load shedding (UFLS) standards had similar types of requirements and had been completed under the construct of a consolidation; and 4) the Independent Expert Review Panel recommendations, which included an evaluation of the existing standards' applicability and level of specificity.

The drafting team agrees that a lack of coordination among protection systems is a key risk to reliability. As part of the revision to address this, the drafting team also agreed that an evaluation and consolidation of the existing UVLS standards was necessary to meet current Reliability Standard development initiatives and to provide clear, comprehensive requirements to address the application and coordination of UVLS.

2) UVLS programs are not mandatory—is compliance for an optional tool necessary?

The drafting team asserts that a key takeaway from the August 14 Blackout Report is that coordination of UVLS with other protection systems could have mitigated the effects if UVLS was used as a tool. Although the use of UVLS is not mandatory, if it is determined that this system preservation measure is necessary to support reliability and a UVLS program is installed, the program needs to be properly coordinated, implemented, and assessed due to the inherent associated reliability risks. As such, there needs to be a level of performance required to properly protect system reliability. Of note, PRC-010-1 and PRC-010-2 apply to the defined term "UVLS Program," which limits the standard's applicability to only those undervoltage-based load shedding programs whose performance has an impact on system reliability.[11]

Coordination with Project 2009-03 Emergency Operations

3) EOP-003-2 has potential redundant requirements with proposed PRC-010-1—how is this being addressed?

As part of its five-year review, Project 2009-03 – Emergency Operations (EOP) identified EOP-003-2 (*Load Shedding Plans*),[12] Requirements R2, R4, and R7 as being more properly covered by Project 2008-02 – UVLS. Both projects were strategically coordinated to move in lockstep from a timing perspective to address these requirements. Project 2009-03 – EOP proposed to revise and consolidate EOP-001-2.1b (*Emergency Operations Planning*),[13] EOP-002-3 (Capacity and Energy Emergencies),[14] and EOP-003-2 to create EOP-011-1, will retire the noted EOP-003-2

[11] The term "UVLS Program" used herein was adopted by the NERC Board of Trustees on November 14, 2014.
[12] http://www.nerc.com/_layouts/PrintStandard.aspx?standardnumber=EOP-003-2&title=Load%20Shedding%20Plans.
[13] http://www.nerc.com/_layouts/PrintStandard.aspx?standardnumber=EOP-001-2.1b&title=Emergency%20Operations%20Planning.
[14] http://www.nerc.com/_layouts/PrintStandard.aspx?standardnumber=EOP-002-3&title=Capacity%20and%20Energy%20Emergencies.

requirements (among other revisions), and the Project 2008-02 – UVLS *Mapping Document* will show how PRC-010-1 encompasses the retired content accordingly. Slated to have aligning effective dates, both EOP-011-1 (*Emergency Operations*)[15] and PRC-010-1 will be posted and balloted separately but concurrently, so that industry stakeholders will be able to clearly evaluate the transition. Please see the posted Project 2008-02 UVLS Project Coordination Plan for more information.

"UVLS Program" Definition

4) Why is the introduction of the new defined term "UVLS Program" necessary?

The drafting team found it necessary to introduce the term "UVLS Program" for inclusion in the *Glossary of Terms Used in NERC Reliability Standards*[16] ("NERC Glossary") because different types of UVLS systems need to be treated appropriately with respect to reliability requirements. Therefore, the term establishes which UVLS systems PRC-010-1 will apply to an: "automatic load shedding program consisting of distributed relays and controls used to mitigate undervoltage conditions impacting the Bulk Electric System (BES), leading to voltage instability, voltage collapse, or Cascading. Centrally controlled undervoltage-based load shedding is not included."

The definition is meant to inherently exclude locally-applied relays that are designed to protect a contained area or, in other words, are not designed to mitigate wide-area voltage collapse. This exclusion is not explicit in these terms in the enforceable language of the definition since the meaning and measurement of "local" or "wide-area" varies greatly on a continent-wide basis and could potentially be interpreted differently by auditors and the applicable functional entities. Therefore, the definition as written is meant to provide flexibility for the Planning Coordinator or Transmission Planner to determine if a UVLS system falls under the defined term with respect to its impact on the reliability of the BES (voltage instability, voltage collapse, or Cascading). To further support the intended exclusion, further discussion and an example are provided on in the PRC-010-1 and PRC-010-2 Guidelines and Technical Basis section under the heading "Guidelines for UVLS Program Definition."

The definition does explicitly note that the term excludes centrally controlled undervoltage-based load shedding. This type of load shedding is excluded because the drafting team asserts that the design and characteristics of centrally controlled undervoltage-based load shedding are commensurate with those of a Special Protection System (SPS) or Remedial Action Scheme (RAS) and should therefore be subject to SPS or RAS-related Reliability Standards. See PRC-010-1 and PRC-010-2 Guidelines and Technical Basis section under the heading "Guidelines for UVLS Program Definition" for further discussion.

[15] http://www.nerc.com/_layouts/PrintStandard.aspx?standardnumber=EOP-011-1&title=Emergency%20Operations.
[16] http://www.nerc.com/pa/Stand/Glossary%20of%20Terms/Glossary_of_Terms.pdf.

5) If the definition excludes certain types of UVLS, does this preclude an "integrated" approach (FERC Order No. 693, Paragraph 1509)?

The defined term "UVLS Program" clarifies which UVLS systems are subject to the requirements in PRC-010-1 and PRC-010-2. The resulting exclusions from these versions of the standard do not preclude an "integrated" approach because the standard requires that an entity coordinate with all other protection and control systems as necessary, which may include other types of UVLS (i.e., locally-applied UVLS relays and centrally controlled undervoltage-based load shedding).

6) Where will centrally controlled undervoltage-based load shedding be covered?

As explained immediately above, the Requirements of PRC-010-1 and PRC-010-2 are applicable to the proposed NERC Glossary term "UVLS Program," which excludes centrally controlled undervoltage-based load shedding because its design and characteristics are commensurate with those of an SPS or RAS. However, the NERC Glossary during the development of PRC-010-1 definition of "Special Protection System" excluded UVLS. Therefore, the work under Project 2010-05.2 – Special Protection Systems (Phase 2 of Protection Systems) combined the NERC Glossary definition of "Special Protection System" into the single term "Remedial Action Scheme."[17] The definition revisions specifically excluded UVLS Programs, therefore including centrally controlled undervoltage-based shedding.

Consequently, the introduction of the term "UVLS Program" and the conforming revision to the term "Remedial Action Scheme" explicitly clarifies that RAS-related standards are applicable to centrally controlled undervoltage-based load shedding. The implementation plan for the revised definition of "Remedial Action Scheme" will address entities that will have newly identified RAS resulting from the application of the defined term.

Similar to the coordination effort with Project 2009-03 – EOP explained above, Project 2008-02 – UVLS and Project 2010-05.2 – SPS were coordinated to ensure that the effective dates of the adopted definitions of "Remedial Action Scheme" and "UVLS Program," the PRC-010-1 and PRC-010-1 Reliability Standards, and all associated retirements align.

7) Is the term "UVLS Program" inclusive of a collection of independent UVLS relays?

No; multiple independent relays do not constitute a program. While the definition stipulates that a UVLS Program consists of distributed relays and controls, the definition specifies that it must be "[a]n automatic load shedding program, consisting of distributed relays and controls, used to mitigate undervoltage conditions impacting the Bulk Electric System(BES), leading to voltage instability, voltage collapse, or Cascading. Centrally controlled undervoltage-based load shedding is not included."

[17] Adopted by the NERC Board of Trustees on November 14, 2014.

Applicability

8) What is meant by the phrase "Planning Coordinator or Transmission Planner"?

The PRC-010-1 and PRC-010-2 Reliability Standards are applicable to both the Planning Coordinator and Transmission Planner because either may be responsible for designing and coordinating the program based on agreements, memorandums of understanding, or tariffs. The phrase "Planning Coordinator or Transmission Planner" provides the flexibility for applicability to the entity that will perform the action. The expectation is not that both parties will perform the action, but rather that the Planning Coordinator and Transmission Planner will engage in discussion to determine the appropriate responsible entity. In addition, the requirements containing this phrase have specific language to qualify the responsible entity. For example, Requirement R1 states: "Each Planning Coordinator or Transmission Planner *that is developing* a UVLS Program shall . . ." This language provides clarity that the applicable entity would be the one that is developing the program.

9) Why is the Transmission Operator not included?

While the Transmission Operator may be involved with UVLS Program activities, the drafting team did not identify any required performance for the Transmission Operator that was necessary to capture within PRC-010-1 and PRC-010-2, since the Transmission Operator does not have the resources necessary to implement program specifications. If responsibilities are delegated to the Transmission Operator by the Transmission Owner, the Transmission Owner is still the accountable party.

To the extent that the Transmission Operator is required to have knowledge of system relays and protection systems, the drafting team notes that this requirement is covered under PRC-001-1.1 (*System Protection Coordination*),[18] Requirement R1. It is also noted that manual load shedding, for which the Transmission Operator is responsible, is not in the purview of PRC-010-1 and PRC-010-2, as it is covered under current EOP-003-2 and will subsequently be covered by proposed EOP-011-1 (see Project 2009-03 – Emergency Operations).

10) What about UVLS schemes owned by Transmission Owners, Distribution Providers, or Transmission Operators that are not required by the planner?

The PRC-010-1 and PRC-010-2 Reliability Standards are applicable to the term "UVLS Program." The drafting team notes that, by its defining attributes, a UVLS Program would be required and developed by a Planning Coordinator or Transmission Planner. The nature of a UVLS scheme developed or required by a Distribution Provider, Transmission Operator, or Transmission Owner would not meet the attributes of the defined term and would therefore not have the design and characteristics necessary to be subject to the requirements of PRC-010-1 and PRC-010-2.

[18] http://www.nerc.com/_layouts/PrintStandard.aspx?standardnumber=PRC-001-1.1&title=System%20Protection%20Coordination.

Requirements R1, R3, R4, and R5

11) What is required to evaluate the coordination referenced in Requirement R1, part 1.2?

Requirement R1 requires each Planning Coordinator or Transmission Planner that develops a UVLS Program to evaluate the program's viability and effectiveness prior to implementation. This evaluation should include studies and analyses used when developing the program that show implementation of the program resolves the identified undervoltage issues that led to its design. These studies and analyses should also show that the UVLS Program is integrated through coordination with generator voltage ride-through capabilities and other protection and control systems. As such, the requirement is meant to provide flexibility for an entity to make the proper determinations, including the considerations for coordination, with respect to program effectiveness based on system characteristics. For further guidance on and examples of coordination considerations, please see the portion of the Guidelines and Technical Basis section under the Requirement R1 heading.

12) Requirements R1, R3, and R4 seem to all require evaluations of program effectiveness—how are they different?

Requirements R1, R3, and R4 do require evaluations of program effectiveness, but they are each at distinct points in time.

Requirement R1 requires evaluation of program effectiveness (by way of the qualifying parts) at the onset of program development, or during the initial planning stage, prior to implementation. Requirement R3 requires the same objectives of an evaluation of effectiveness, but at the point of a mandatory periodic review (at least once every 60 calendar months). Requirement R4 addresses the performance of a UVLS Program after an event (for applicable voltage excursion) to evaluate whether the UVLS Program resolved the undervoltage issues associated with the event.

It is noted that, because of the separate activities of each requirement, UVLS Program deficiencies found as a result of the assessments performed in Requirement R3 or R4 would not be violations of Requirement R1.

13) Requirement R4 would require the Planning Coordinator or Transmission Planner to review all voltage excursions—isn't this unduly burdensome?

While Requirement R4 essentially requires the Planning Coordinator or Transmission Planner to review all voltage excursions to see if they fall below the initializing set points of the UVLS Program, the drafting team contends that it will be clearly evident if voltage falls below the UVLS threshold because either a) UVLS devices will operate; or b) the system will experience the adverse conditions the UVLS Program was installed to mitigate.

In addition, the drafting team acknowledges that the Planning Coordinator or Transmission Planner may not have the ability to know when voltage excursions are occurring since they are not operating entities. However, a process for the Transmission Operator, Transmission Owner,

or Distribution Provider to notify the Transmission Planner or Planning Coordinator of such voltage excursion events is consistent with standard utility practice.

14) PRC-022-1 required the analysis of UVLS Misoperations. How is this addressed in PRC-010-1?

One of the recommendations in the SPCS report was to clearly differentiate between the post-event process of validating the effectiveness of the UVLS program design, its coordination with other protection and control systems, and the potential need to modify the program design (activities addressed in PRC-010-1) and the process of verifying correct operation of UVLS equipment. Because PRC-010-1 was not specific concerning the Misoperation of UVLS equipment, the drafting team made a subsequent revision creating PRC-010-2. Version two (PRC-010-2) now requires that the assessment according to Requirement R4 include the performance (i.e., operation or non-operation) of the UVLS Program equipment.

Relative to the assessment, Requirement R5 requires that a Corrective Action Plan be developed to address any identified deficiencies. This structure ensures that UVLS Program equipment is assessed to identify any Misoperation which could affect BES reliability. Although, the UVLS drafting team maintained during development of PRC-010-1 that verifying correct operation of UVLS equipment should be addressed in PRC-004, the drafting team included UVLS that is intended to trip one or more BES Elements in the proposed PRC-004-5.

Requirements R6, R7, and R8

15) Do Requirements R6, R7, and R8 overlap with the requirements of MOD-032-1?

While both MOD-032-1 (*Data for Power System Modeling and Analysis*)[19] and Requirements R6, R7, and R8 of PRC-010-1 and PRC-010-2 address data requirements, MOD-032-1 establishes overarching modeling data requirements with respect to consistency in format and reporting procedures, whereas the PRC-010-1 and PRC-010-2 requirements address the need to maintain and share data and databases for the purposes of studies for use in event analyses for UVLS Programs specifically. While Reliability Standards in general may have overlap in this manner, the activities in these requirements remain distinctly different.

[19] http://www.nerc.com/_layouts/PrintStandard.aspx?standardnumber=MOD-032-1&title=Data%20for%20Power%20System%20Modeling%20and%20Analysis.

16) Requirements R6, R7, and R8 appear to be administrative — doesn't this conflict with Paragraph 81 criteria?[20]

Proper maintenance and timely sharing of UVLS Program data as required by Requirements R6, R7, and R8 is necessary to inform the Planning Coordinator or Transmission Planner's studies and analyses. While administrative tasks are required, the tasks have a core reliability-based need.

In addition, Requirements R6, R7, and R8 were written to emulate FERC-approved PRC-006-2 (*Automatic Underfrequency Load Shedding*)[21,22] data requirements. While some of these analogous requirements in PRC-006-2 are listed as candidates for Phase 2 of the Paragraph 81 project, they are not yet approved as meeting the criteria; furthermore, the Independent Expert Review Panel has recommended that these Paragraph 81 candidates not be included for deletion, citing that "there should be a clear expectation for Planning Coordinators to share data necessary to determine their UFLS program parameters."

[20] Refer to Standards Independent Expert Review Project (IERP). http://www.nerc.com/pa/Stand/Standard%20Development%20Plan/Standards_Independent_Experts_Review_Project_Report-SOTC_and_Board.pdf.
[21] http://www.nerc.com/_layouts/PrintStandard.aspx?standardnumber=PRC-006-2&title=Automatic%20Underfrequency%20Load%20Shedding.
[22] Adopted by the NERC Board of Trustees on November 14, 2014.

Standard Development Timeline

This section is maintained by the drafting team during the development of the standard and will be removed when the standard becomes effective.

Development Steps Completed

1. The NERC Board of Trustees adopted PRC-010-1 on November 13, 2014.
2. The NERC Standards Committee authorized the initial posting on February 18, 2015.

Description of Current Draft

The UVLSSDT is posting Draft 1 of PRC-010-2 – Undervoltage Load Shedding for a 45-day initial formal comment period and concurrent/parallel initial ballot in the last ten days of the comment period. The draft contains revisions to Requirements R4 and R5 to address UVLS equipment.

Anticipated Actions	Date
45-day formal comment period with ballot	February 2015
10-day final ballot	April 2015
Board adoption	May 2015

Project Development Background

The undervoltage load shedding (UVLS) standard drafting team (SDT) was tasked with addressing Misoperation of UVLS equipment during the development of version one of PRC-010 and version three of PRC-004 in Project 2010-05.1 (i.e., Misoperation). This project has been named phase 2 of Project 2008-02 (i.e., UVLS) for clarity purposes. Each SDT for these two projects outlined work necessary to address Misoperation of UVLS equipment. This work was deferred, at the time, because both PRC-010-1 and PRC-004-3 contained dependencies with other projects requiring their completion. This phase two is a continuation of the work performed under the Standards Authorization Request (SAR) for Project 2008-02.

The revisions proposed in Reliability Standard PRC-010-2 meet the following objectives:

- Address the UVLS Misoperation the remaining work due to the retirement of PRC-022-1 (Undervoltage Load Shedding Program Performance) during the development of PRC-010-1 (Undervoltage Load Shedding)
- Ensure UVLS equipment (i.e., operation or non-operation) within the UVLS Program is assessed and mitigated

Basis for Revision

Originally, Misoperation of UVLS equipment was planned to be appended to a future version of PRC-004 (Protection System Misoperation Identification and Correction). The SDT is proposing a two-prong approach by revising both PRC-004 and PRC-010 to address the concern of identifying Misoperations of UVLS equipment in PRC-022-1.

First, the SDT proposes an addition to the Applicability section of PRC-004 to include UVLS that is intended to trip one or more Bulk Electric System (BES) Elements. This is consistent with previous communication to industry about addressing Misoperation of UVLS equipment. Entities will be required to address UVLS that trips a BES Element similarly to other Protection Systems in PRC-004. While the revision to PRC-004 consistent with the communicated approach, the SDT determined that the proposed revision fails to address the performance (operation or non-operations) of UVLS Program equipment not covered by the strict processes of PRC-004.

Second, the SDT is proposing clarifying revisions in PRC-010-2, Requirements R4 and R5 to address UVLS Program equipment performance. These revisions are not requiring UVLS entities to address UVLS protective relays not covered by the strict processes of PRC-004; however, PRC-010-2 is requiring UVLS entities to address the deficiencies (e.g., Misoperations) identified in the assessment performed by Planning Coordinator or Transmission Planner in Requirement R4. Deficiencies include the performance (operation or non-operation) issues of UVLS Program equipment. These deficiencies, if any, are addressed by the UVLS entities through a Corrective Action Plan (CAP) developed in Requirement R5 and executed by the UVLS entities in Requirement R2 of PRC-010.

The term “Misoperation” as defined by the Glossary of Terms Used in NERC Reliability Standards is not used within the Requirements of PRC-010; however, the term is used in the Guidelines and Technical Basis section of the standard to provide clarity that UVLS Program equipment deficiencies include Misoperations that are to be corrected by UVLS entities. The PRC-010-2 Reliability Standard mandates that UVLS entities are to correct the deficiencies identified by the Planning Coordinator or Transmission Planner, such as Misoperation of UVLS equipment. Deficiencies are identified through either the periodic assessment or an assessment performed following an event and included in a CAP to the UVLS entity. The structure used by the SDT allows the Planning Coordinator and Transmission Planner to assess UVLS equipment for Misoperation under PRC-010 rather than the Generator Owner, Transmission Owner, and Distribution Provider applicable to the strict processes of PRC-004.

The two-pronged approach ensures that any UVLS Program equipment containing a deficiency is identified and corrected under PRC-010 and UVLS that trips a BES Element under is corrected under PRC-004 to address the requirements in the retired PRC-022-1.

When this standard receives Board adoption, the rationale boxes in the Supplemental Material section of the standard will remain. The rationale box for Requirement R5 will be removed.

A. Introduction

1. **Title:** Undervoltage Load Shedding

2. **Number:** PRC-010-~~1~~-2

3. **Purpose:** To establish an integrated and coordinated approach to the design, evaluation, and reliable operation of Undervoltage Load Shedding Programs (UVLS Programs).

4. **Applicability:**

   4.1. Functional Entities:

   4.1.1 Planning Coordinator.

   4.1.2 Transmission Planner.

   4.1.3 Undervoltage load shedding (UVLS) entities – Distribution Providers and Transmission Owners responsible for the ownership, operation, or control of UVLS equipment as required by the UVLS Program established by the Transmission Planner or Planning Coordinator.

5. **Effective Date:** See Project 2008-02.2 Implementation Plan.

~~1. Background:~~

~~PRC-010-1 – Undervoltage Load Shedding is a consolidation and revision of the following Reliability Standards:~~

- ~~PRC-010-0 – Assessment of the Design and Effectiveness of UVLS Program~~
- ~~PRC-020-1 – Under-Voltage Load Shedding Program Database~~
- ~~PRC-021-1 – Under-Voltage Load Shedding Program Data~~
- ~~PRC-022-1 – Under-Voltage Load Shedding Program Performance~~

~~The UVLS Standard Drafting Team (or drafting team) developed the revised PRC-010-1 to meet the following objectives:~~

- ~~Address the FERC directive in Order No. 693, Paragraph 1509 to modify PRC-010-0 to require an integrated and coordinated approach to all protection systems.~~
- ~~Replace the applicability to and involvement of the Regional Reliability Organization (RRO) in PRC-020-1 and PRC-021-1.~~
- ~~Consolidate the UVLS-related standards into one comprehensive standard (similar to the construct of FERC-approved PRC-006-1 – Automatic~~

~~Underfrequency Load Shedding).~~

- ~~Clearly identify and separate centrally controlled undervoltage□based load shedding due to the reliability requirements needed for this type of load shedding as compared to other UVLS systems.~~
- ~~Create a single results□based standard that addresses current reliability issues associated with UVLS.~~

B. Requirements and Measures

R1. Each Planning Coordinator or Transmission Planner that is developing a UVLS Program shall evaluate its effectiveness and subsequently provide the UVLS Program's specifications and implementation schedule to the UVLS entities responsible for implementing the UVLS Program. The evaluation shall include, but is not limited to, studies and analyses that show: *[Violation Risk Factor: High] [Time Horizon: Long-term Planning]*

1.1. The implementation of the UVLS Program resolves the identified undervoltage issues that led to its development and design.

1.2. The UVLS Program is integrated through coordination with generator voltage ride-through capabilities and other protection and control systems, including, but not limited to, transmission line protection, autoreclosing, Remedial Action Schemes, and other undervoltage-based load shedding programs.

M1. Acceptable evidence may include, but is not limited to, date-stamped studies and analyses, reports, or other documentation detailing the effectiveness of the UVLS Program, and date-stamped communications showing that the UVLS Program specifications and implementation schedule were provided to UVLS entities.

R2. Each UVLS entity shall adhere to the UVLS Program specifications and implementation schedule determined by its Planning Coordinator or Transmission Planner associated with UVLS Program development per Requirement R1 or with any Corrective Action Plans per Requirement R5. *[Violation Risk Factor: High] [Time Horizon: Long-term Planning]*

M2. Acceptable evidence must include date-stamped documentation on the completion of actions and may include, but is not limited to, identifying the equipment armed with UVLS relays, the UVLS relay settings, associated Load summaries, work management program records, work orders, and maintenance records.

R3. Each Planning Coordinator or Transmission Planner shall perform a comprehensive assessment to evaluate the effectiveness of each of its UVLS Programs at least once every 60 calendar months. Each assessment shall include, but is not limited to, studies and analyses that evaluate whether: *[Violation Risk Factor: Medium] [Time Horizon: Long-term Planning]*

3.1. The UVLS Program resolves the identified undervoltage issues for which the UVLS Program is designed.

3.2. The UVLS Program is integrated through coordination with generator voltage ride-through capabilities and other protection and control systems, including,

but not limited to, transmission line protection, autoreclosing, Remedial Action Schemes, and other undervoltage-based load shedding programs.

M3. Acceptable evidence may include, but is not limited to, date-stamped reports or other documentation detailing the assessment of the UVLS Program.

Rationale for Requirement R4: Refer to the Supplemental Section at the end of the document for the rationale.

R4. Each Planning Coordinator or Transmission Planner shall, within 12 calendar months of an event that resulted in a voltage excursion for which its UVLS Program was designed to operate, perform an assessment to evaluate ~~whether its UVLS Program resolved the undervoltage issues associated with the event.~~: *[Violation Risk Factor: Medium] [Time Horizon: Operations Planning]*

4.1. Whether its UVLS Program resolved the undervoltage issues associated with the event, and

4.2. The performance (i.e., operation and non-operation) of the UVLS Program equipment.

M4. Acceptable evidence may include, but is not limited to, date-stamped event data, event analysis reports, or other documentation detailing the assessment of the UVLS Program and associated equipment.

R5. Each Planning Coordinator or Transmission Planner that identifies deficiencies ~~in its UVLS Program~~ during an assessment performed in either Requirement R3 or R4 shall develop a Corrective Action Plan to address the deficiencies and subsequently provide the Corrective Action Plan, including an implementation schedule, to UVLS entities within three calendar months of completing the assessment. *[Violation Risk Factor: Medium] [Time Horizon: Operations Planning]*

M5. Acceptable evidence must include a date-stamped Corrective Action Plan that addresses identified deficiencies and may also include date-stamped reports or other documentation supporting the Corrective Action Plan. Evidence should also include date-stamped communications showing that the Corrective Action Plan and an associated implementation schedule were provided to UVLS entities.

R6. Each Planning Coordinator that has a UVLS Program in its area shall update a database containing data necessary to model the UVLS Program(s) in its area for use in event analyses and assessments of the UVLS Program at least once each calendar year. *[Violation Risk Factor: Lower] [Time Horizon: Operations Planning]*

M6. Acceptable evidence may include, but is not limited to, date-stamped spreadsheets, database reports, or other documentation demonstrating a UVLS Program database was updated.

R7. Each UVLS entity shall provide data to its Planning Coordinator according to the format and schedule specified by the Planning Coordinator to support maintenance of a UVLS Program database. *[Violation Risk Factor: Lower] [Time Horizon: Operations Planning]*

M7. Acceptable evidence may include, but is not limited to, date-stamped emails, letters, or other documentation demonstrating data was provided to the Planning Coordinator as specified.

R8. Each Planning Coordinator that has a UVLS Program in its area shall provide its UVLS Program database to other Planning Coordinators and Transmission Planners within its Interconnection, and other functional entities with a reliability need, within 30 calendar days of a written request. *[Violation Risk Factor: Lower] [Time Horizon: Operations Planning]*

M8. Acceptable evidence may include, but is not limited to, date-stamped emails, letters, or other documentation demonstrating that the UVLS Program database was provided within 30 calendar days of receipt of a written request.

C. Compliance

1. Compliance Monitoring Process

1.1. Compliance Enforcement Authority

As defined in the NERC Rules of Procedure, "Compliance Enforcement Authority" means NERC or the Regional Entity in their respective roles of monitoring and enforcing compliance with the NERC Reliability Standards.

1.2. Evidence Retention

The following evidence retention periods identify the period of time an entity is required to retain specific evidence to demonstrate compliance. For instances where the evidence retention period specified below is shorter than the time since the last audit, the Compliance Enforcement Authority may ask an entity to provide other evidence to show that it was compliant for the full-time period since the last audit.

The Planning Coordinator, Transmission Planner, Distribution Provider, and Transmission Owner shall keep data or evidence to show compliance as identified below unless directed by its Compliance Enforcement Authority to retain specific evidence for a longer period of time as part of an investigation.

The applicable entity shall retain documentation as evidence for six calendar years.

If an applicable entity is found non-compliant, it shall keep information related to the non-compliance until mitigation is complete and approved, or for the time specified above, whichever is longer.

The Compliance Enforcement Authority shall keep the last audit records and all requested and submitted subsequent audit records.

1.3. Compliance Monitoring and Assessment Processes:

"Compliance Monitoring and Assessment Processes" refers to the identification of the processes that will be used to evaluate data or information for the purpose of assessing performance or outcomes with the associated reliability standard.

1.4. Additional Compliance Information

None.

Table of Compliance Elements

R #	Time Horizon	VRF	Violation Severity Levels			
			Lower VSL	Moderate VSL	High VSL	Severe VSL
R1	Long-term Planning	High	N/A	N/A	N/A	The applicable entity that developed the UVLS Program failed to evaluate the program's effectiveness and subsequently provide the UVLS Program's specifications and implementation schedule to UVLS entities in accordance with Requirement R1, including the items specified in Parts 1.1 and 1.2.

R #	Time Horizon	VRF	Violation Severity Levels			
			Lower VSL	Moderate VSL	High VSL	Severe VSL
R2	Long-term Planning	High	N/A	N/A	The applicable entity failed to adhere to the UVLS Program specifications in accordance with Requirement R2. OR The applicable entity failed to adhere to the implementation schedule in accordance with Requirement R2.	The applicable entity failed to adhere to the UVLS Program specifications and implementation schedule in accordance with Requirement R2.
R3	Long-term Planning	Medium	N/A	N/A	N/A	The applicable entity failed to perform an assessment at least once during the 60 calendar months in accordance with Requirement R3, including the items specified in Parts 3.1 and 3.2.

R #	Time Horizon	VRF	Violation Severity Levels			
			Lower VSL	Moderate VSL	High VSL	Severe VSL
R4	Operations Planning	Medium	The applicable entity performed an assessment in accordance with Requirement R4 within a time period greater than 12 calendar months but less than or equal to 13 calendar months after an applicable event.	The applicable entity performed an assessment in accordance with Requirement R4 within a time period greater than 13 calendar months but less than or equal to 14 calendar months after an applicable event.	The applicable entity performed an assessment in accordance with Requirement R4 within a time period greater than 14 calendar months but less than or equal to 15 calendar months after an applicable event.	The applicable entity performed an assessment in accordance with Requirement R4 within a time period greater than 15 calendar months after an applicable event. OR The applicable entity failed to perform an assessment in accordance with Requirement R4.

R #	Time Horizon	VRF	Violation Severity Levels			
			Lower VSL	Moderate VSL	High VSL	Severe VSL
R5	Operations Planning	Medium	The applicable entity developed a Corrective Action Plan and provided it to UVLS entities in accordance with Requirement R5 but was late by less than or equal to 15 calendar days.	The applicable entity developed a Corrective Action Plan and provided it to UVLS entities in accordance with Requirement R5 but was late by more than 15 calendar days but less than or equal to 30 calendar days.	The applicable entity developed a Corrective Action Plan and provided it to UVLS entities in accordance with Requirement R5 but was late by more than 30 calendar days but less than or equal to 45 calendar days.	The applicable entity developed a Corrective Action Plan and provided it to UVLS entities in accordance with Requirement R5 but was late by more than 45 calendar days. OR The responsible entity failed to develop a Corrective Action Plan or provide it to UVLS entities in accordance with Requirement R5.

R #	Time Horizon	VRF	Violation Severity Levels			
			Lower VSL	Moderate VSL	High VSL	Severe VSL
R6	Operations Planning	Lower	The applicable entity updated the database in accordance with Requirement R6 but was late by less than or equal to 30 calendar days.	The applicable entity updated the database in accordance with Requirement R6 but was late by more than 30 calendar days but less than or equal to 60 calendar days.	The applicable entity updated the database in accordance with Requirement R6 but was late by more than 60 calendar days but less than or equal to 90 calendar days.	The applicable entity updated the database in accordance with Requirement R6 but was late by more than 90 calendar days. OR The applicable entity failed to update the database in accordance with Requirement R6.

R #	Time Horizon	VRF	Violation Severity Levels			
			Lower VSL	Moderate VSL	High VSL	Severe VSL
R7	Operations Planning	Lower	The applicable entity provided data in accordance with Requirement R7 but was late by less than or equal to 30 calendar days per the specified schedule. OR The applicable entity provided data in accordance with Requirement R7 but the data was not provided according to the specified format.	The applicable entity provided data in accordance with Requirement R7 but was late by more than 30 calendar days but less than or equal to 60 calendar days per the specified schedule.	The applicable entity provided data in accordance with Requirement R7 but was late by more than 60 calendar days but less than or equal to 90 calendar days per the specified schedule.	The applicable entity provided data in accordance with Requirement R7 but was late by more than 90 calendar days per the specified schedule. OR The applicable entity failed to provide data in accordance with Requirement R7.

R #	Time Horizon	VRF	Violation Severity Levels			
			Lower VSL	Moderate VSL	High VSL	Severe VSL
R8	Operations Planning	Lower	The applicable entity provided its UVLS Program database in accordance with Requirement R8 but was late by less than or equal to 15 calendar days.	The applicable entity provided its UVLS Program database in accordance with Requirement R8 but was late by more than 15 calendar days but less than or equal to 30 calendar days.	The applicable entity provided its UVLS Program database in accordance with Requirement R8 but was late by more than 30 calendar days but less than or equal to 45 calendar days.	The applicable entity provided its UVLS Program database in accordance with Requirement R8 but was late by more than 45 calendar days. OR The applicable entity failed to provide its UVLS Program database in accordance with Requirement R8.

D. Regional Variances

None.

E. Interpretations

None.

F. Associated Documents

None.

Version History

Version	Date	Action	Change Tracking
0	February 8, 2005	Adopted by NERC Board of Trustees	
0	April 1, 2005	Effective Date	
0	February 7, 2013	Adopted by NERC Board of Trustees	R2 and associated elements for retirement as part of the Paragraph 81 project (Project 2013-02) pending applicable regulatory approval.
1	November 13, 2014	Adopted by NERC Board of Trustees	Revisions made under Project 2008-02: Undervoltage Load Shedding (UVLS) & Underfrequency Load Shedding (UFLS) to address directive issued in FERC Order No. 763.
2		Adopted by NERC Board of Trustees	Revisions made under Project 2008-02.2: Undervoltage Load Shedding (UVLS): Misoperation to include UVLS equipment.

Guidelines and Technical Basis

Introduction

~~PRC-010-1 is a single, comprehensive standard that addresses the same reliability principles outlined in its legacy standards, PRC-010-0, PRC-020-1, PRC-021-1, and PRC-022-1. The standard also addresses a FERC directive from Order No. 693, Paragraph 1509. This paragraph directs NERC to develop a modification to PRC-010-0 that requires an integrated and coordinated approach to all protection systems, including generators and transmission lines, generators' low voltage ride-through capabilities, and underfrequency load shedding (UFLS) and UVLS programs.~~

~~Since FERC-approved PRC-006-1 – Automatic Underfrequency Load Shedding was developed under a similar construct of combining existing standards and addressing a FERC Order No. 693 directive, the drafting team looked to this standard as a guide. With the understanding that UVLS and UFLS systems have fundamental differences, the drafting team adopted PRC-006-1's industry-vetted reliability principles and language as applicable to UVLS Programs.~~

~~The drafting team's established purpose for PRC-010-1 is to clearly define the responsibilities of applicable entities to pursue an integrated and coordinated approach to the design, evaluation, and reliable operation of UVLS Programs. Since the need for and design of UVLS Programs is unique to each system preservation footprint, the intent of the standard is to provide a framework of reliability requirements for such programs to which each individual entity can apply its program's specific considerations and characteristics. The drafting team emphasizes that PRC-010-1 does not require a mandatory UVLS Program, nor does this standard address the need to have a UVLS Program. PRC-010-1 applies only after an entity has determined the need for a UVLS Program as a result of its own planning studies.~~

~~The~~The standard drafting team provides the following discussion to support the approach to the standard. The information is meant to enhance the understanding of the reliability needs and deliverable expectations of each requirement, supported as necessary by technical principles and industry experience.

~~The design and characteristics of a centrally controlled undervoltage-based load shedding system are commensurate with a Special Protection System (SPS) or Remedial Action Scheme (RAS), therefore, the drafting team maintains that this type of load shedding should be covered by SPS or RAS-related Reliability Standards. Therefore, PRC-010-1 introduces a new Glossary of Terms Used in NERC Reliability Standards term, UVLS Program, to establish the applicability of PRC-010-1 to automatic load shedding programs consisting of distributed relays and controls used to mitigate undervoltage conditions impacting the Bulk Electric System (BES), leading to voltage instability, voltage collapse, or Cascading. Undervoltage-based load shedding that does not have such an impact as determined by the Planning Coordinator or Transmission Planner is not included. It is further noted that this term excludes centrally controlled undervoltage-based load shedding.~~

~~Subsequently, since the current Glossary of Terms Used in NERC Reliability Standards definition of Special Protection System excludes UVLS, concurrent Project 2010□05.2 – Special Protection Systems (Phase 2 of Protection Systems) will adjust the definition to exclude only UVLS Programs as defined above and therefore include centrally controlled undervoltage□based load shedding. Of note, the drafting team for Project 2010□05.2 is proposing to change the term from Special Protection System to Remedial Action Scheme. Accordingly, PRC□010□1 uses the term Remedial Action Scheme instead of Special Protection System. In the current inventory of NERC Reliability Standards, there is one instance of the term undervoltage load shedding program, which is in NUC□001□2.1. Project 2012□13 Nuclear Plant Interface Coordination has adjusted the language of this reference in proposed NUC□001□3 to eliminate any potential confusion of a lowercase usage of a defined term. Likewise, future projects containing standards that feature variations of the term (e.g., undervoltage load shedding system) will also be advised to consider the newly defined term.~~

~~Requirements of the revised Reliability Standard PRC□010□1 meet the following objectives:~~

- ~~Evaluate a UVLS Program's effectiveness prior to implementation, including the program's coordination with other protection systems and generator voltage ride-through capabilities.~~
- ~~Adhere to UVLS Program specifications and implementation schedule.~~
- ~~Perform periodic assessment and performance analysis of UVLS Programs and resolve identified deficiencies.~~
- ~~Maintain and share UVLS Program data.~~

~~Also of note, Project 2009□03 – Emergency Operations is proposing EOP□011□1, which, as part of the overall revisions, retires specific requirements from EOP□003□2 – Load Shedding Plans to eliminate identified redundancy between PRC□010□1 and EOP□003□2. In addition, the UVLS drafting team's intention is for PRC□004 to address Misoperations of UVLS Programs that are intended to trip one or more BES Elements. A change to make these types of UVLS Programs explicitly applicable to PRC□004 will be addressed once PRC□004□3 – Protection System Misoperation Identification and Correction is completed under Project 2010□05.1 – Misoperations (Phase 1 of Protection Systems).~~

Guidelines for UVLS Program Definition

The definition for the term~~-~~, “Undervoltage Load Shedding Program” or “UVLS Program” includes automatic load shedding programs that utilize only voltage inputs at locations where action is taken to shed load. As such, the failure of a single component is unlikely to affect the reliable operation of the program.

The ~~definition for the term~~ UVLS Program definition excludes centrally controlled undervoltage-based load shedding, which utilizes inputs from multiple locations and may also utilize inputs other than voltages (such as generator reactive reserves, facility loadings, equipment statuses, etc.). The design and characteristics of a centrally controlled undervoltage-based load shedding system are the same as that of a Remedial Action Scheme (RAS~~,~~), wherein load shedding is the remedial action. Therefore, just like for a RAS, the failure of a single component can compromise the reliable operation of centrally controlled undervoltage-based load shedding.

To ensure that the applicability of the standard ~~is to~~includes only those undervoltage-based load shedding systems whose performance has an impact on system reliability, a UVLS Program must mitigate risk of one or more of the following: voltage instability, voltage collapse, or Cascading impacting the ~~BES.~~Bulk Electric System (BES). An example of a program that would not fall under this category is undervoltage-based load shedding installed to mitigate damage to equipment or local loads that are directly affected by the low voltage event.

~~Below~~Figure 1 below is an example of a BES subsystem for which a UVLS system could be used as a solution to mitigate various issues following the loss of the 345 kV double circuit line between ~~bus~~buses A and ~~bus~~ B. If the consequence of this Contingency does not impact the BES by leading to voltage instability, voltage collapse, or Cascading ~~involving the BES~~, a UVLS system (installed at either, or both, bus B and D) used to mitigate this ~~case~~Contingency would not fall under the definition of a UVLS Program. However, if this same UVLS system ~~would be~~is used to mitigate an Adverse Reliability Impact outside this contained area, it would be classified as a wide-area undervoltage problem and would fall under the definition of UVLS Program.

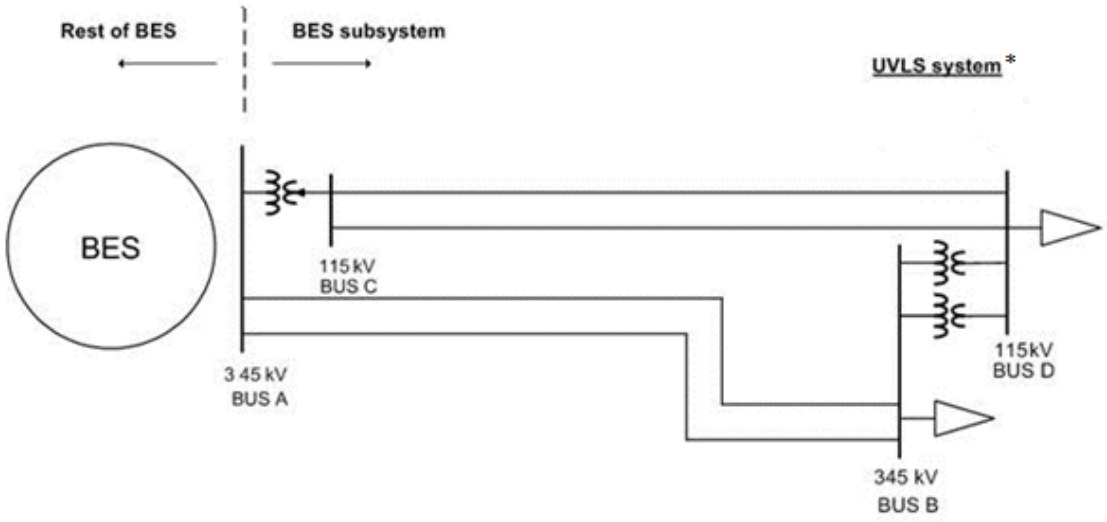

*UVLS systems may be installed at either, or both, bus B and D

~~High Level Requirement Overview~~

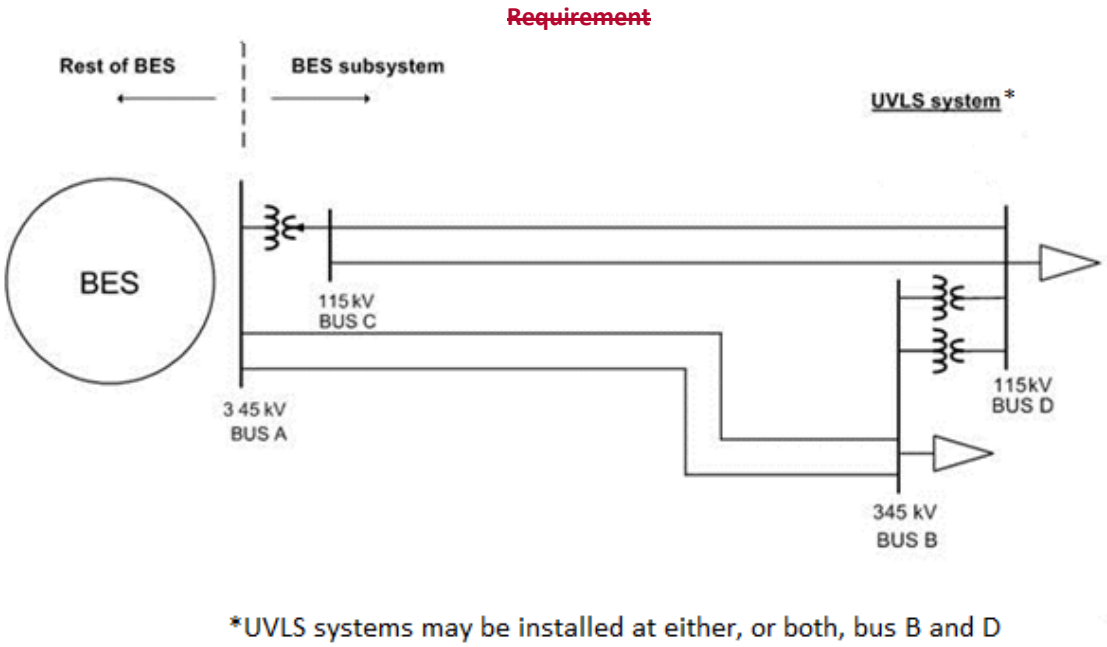

Figure 1: UVLS Subsystem

Guidelines for Requirements

Table 1 provides a high-level overview of the requirements contained in the standard.

Table 1: High-Level Requirement Overview

Requirement	Entity	Evaluate Program Effectiveness	Adhere to Program Specifications and Schedule	Perform Program Assessment (Periodic or Performance)	Develop a CAP to Address Program Deficiencies	Update and/or Share Program Data
R1	PC or TP	X				
R2	UVLS entity		X			
R3	PC or TP	X		X		
R4	PC or TP	X		X		
R5	PC or TP				X	
R6	PC					X
R7	UVLS entity					X
R8	PC					X

Guidelines for Requirement R1~~:~~

A UVLS Program may be developed and implemented to either serve as a safety net system protection measure against unforeseen extreme Contingencies or to achieve specific system performance for known transmission Contingencies for which dropping of load is allowed under Transmission Planning (TPL) Reliability Standards. Regardless of the purpose, it is important that the UVLS Program being implemented is effective in terms that it mitigates undervoltage conditions impacting the Bulk Electric System (BES), leading to voltage instability, voltage collapse, or Cascading. Consideration should be given to voltage set points and time delays, rate of voltage decay or recovery, power flow levels, etc. when designing a UVLS Program.

For the UVLS Program to be effective in achieving its goal, it is also necessary that the UVLS Program is coordinated with generator voltage ride-through capabilities and other protection and control systems that may have an impact on the performance of the UVLS Program. Some of these protection and control systems may include, but are not limited to, transmission line protection, RAS, other undervoltage-based load shedding programs, autoreclosing, and controls of shunt capacitors, reactors, and static ~~var~~voltampere-reactive systems (SVSs).

For example, if the purpose of a UVLS Program is to mitigate fault-induced delayed voltage recovery (FIDVR) events in a large load center that also includes local generation, it is important that such a UVLS Program is coordinated with local generators' voltage ride-through capabilities. Generators in the vicinity of a load center are critical to providing dynamic voltage support to the system during FIDVR events. To maximize the benefit of on-line generation, the best practice may be to shed load prior to generation trip. However, occasionally, it may be best to let generation trip prior to load shed. Therefore, the impact of generation tripping should be considered while designing a UVLS Program.

Another example that can be highlighted is the coordination of a UVLS Program with automatic shunt reactor tripping devices if there are any on the system. Most likely, any shunt reactors on the system will trip off automatically after some time delay during low voltage conditions. In such cases, shunt reactors should be tripped before the load is shed to preserve the system. This may require coordination of time delays associated with the UVLS Program with shunt reactor tripping devices.

~~Examples~~The examples given above demonstrate that, for a UVLS Program to be effective, proper consideration should be given to coordination of a UVLS Program with generator ride-through capabilities and other protection and control systems.

Guidelines for Requirement R2~~:~~

Once a Planning Coordinator (PC) or Transmission Planner (TP) has identified a need for a UVLS Program, the Planning Coordinator or Transmission Planner will develop a program that includes specifications and an implementation schedule, which are then provided to UVLS entities per Requirement R1. Specifications may include voltage set points, time delays, amount of load to be shed, and the location at which load needs to be shed~~, etc~~. If UVLS entities do not implement the UVLS Program according to the specifications and schedule provided, the UVLS Program may not be effective and may not achieve its intended goal. The UVLS entity must document that all necessary actions were completed to implement the UVLS Program.

Similarly, when a Corrective Action Plan (CAP) to address UVLS Program deficiencies is developed by the Planning Coordinator or Transmission Planner and provided to UVLS entities per Requirement R5, UVLS entities must comply with the CAP and its associated implementation schedule to ensure that the UVLS Program is effective. The UVLS entity is required to complete the actions specified in the CAP, document the plan implementation, and retain the appropriate evidence to demonstrate implementation and completion.

Deferrals or other relevant changes to the UVLS Program specifications or CAP need to be documented so that the record includes not only what was planned, but what was implemented. Depending on the planning and documentation format used by the responsible entity, evidence of a successful execution could consist of signed-off work orders, printouts from work management systems, spreadsheets of planned versus completed work, timesheets, work inspection reports, paid invoices, photographs, walk-through reports, or other evidence.

For example, documentation of a CAP provides an auditable progress and completion confirmation for the identified UVLS Program deficiency:

> **CAP Example 1** - Corrective actions for a quick triggering problem; preemptive actions for similar installations:

The PC or TP obtains fault records from a UVLS entity that participates in its UVLS Program that indicate a group of UVLS relays triggered at the appropriate undervoltage level but with shorter delays than expected. The PC or TP directed the UVLS entity to schedule on-site inspections within three weeks. The results of the inspection confirmed that the delay-time programmed on the relays was 60 cycles instead of 90 cycles. The PC or TP then directed the UVLS entity to correct to a 90-cycle time delay setting of the UVLS relays identified to have shorter time delay settings within eight weeks.

Applicability to other UVLS relays: The PC or TP then developed a schedule with the UVLS entity to verify and adjust all remaining UVLS relays time delay settings within a one-year period.

The PC or TP verified completion of verification and adjustment of the time delay settings for all of the UVLS entity's equipment that participates in the PC or TP UVLS Program

CAP Example 2 - Corrective actions for a firmware problem; preemptive actions for similar installations:

The PC or TP obtains fault records on 6/4/2014 from a UVLS entity that participates in its UVLS Program. The UVLS entity also provided the fault records to the manufacturer, who responded on 6/11/2014 that the ~~misoperation~~Misoperation[1] of the UVLS relay was caused by a bug in version 2 firmware, and recommended installing version 3 firmware. The PC or TP approved the UVLS entity's plan to schedule Version 3 firmware installation on 6/12/2014.

Applicability to other UVLS relays: The PC or TP then developed a schedule with the UVLS entity to install firmware version 3 at all of the UVLS entity's UVLS relays that are determined to be programmed with version 2 firmware. The completion date was scheduled no-later-than 12/31/2014.

The firmware replacements were completed on 12/4/2014.

Guidelines for Requirement R3~~:~~

In addition to the initial studies required to develop a UVLS Program, periodic comprehensive assessments (detailed analyses) are required to ensure its continued effectiveness. This assessment ~~should~~is required to be completed at least once every 60 calendar months to capture the accumulated

[1] Misoperation of Protection Systems reporting was initiated by the NERC Board of Trustees adopted NERC Rules of Procedure, Section 1600, Request for Data or Information. Refer to: *Request for Data of Information, Protection System Misoperation Data Collection*, August 14, 2014. http://www.nerc.com/pa/RAPA/ProctectionSystem Misoperations/PRC-004-3%20Section%201600%20Data%20Request_20140729.pdf.

effects of minor changes to the system that have occurred since the last assessment was completed. However, at any point in time, a Planning Coordinator or Transmission Planner may also determine that a material change[2] to system topology or operating conditions affects the performance of the UVLS Program and therefore necessitates the same comprehensive assessment. Regardless of the trigger, each assessment should include an evaluation of each UVLS Program to ensure the continued integration through coordination.

This comprehensive assessment supplementscomplements the TPL-001-4 annual assessment requirement to evaluate the impact of protection systems. The 60-month period is the same time frame used in TPL-001-4 and in PRC-006-1.

With respect to situations in which a material change to system and topology or operating conditions would necessitate a comprehensive assessment of the UVLS Program, it is understood that the term material change is not transportable on a continent□wide basis. This determination must be made by the Planning Coordinator or Transmission Planner and should be accompanied by documentation to support the technical rationale for determining material changes.

As specified in Requirement R3, a comprehensive assessment must be performed at least once every 60 calendar months. If a Planning Coordinator or Transmission Planner conducts a comprehensive assessment sooner for the reasons discussed above, the 60-month time period would restart upon completion of this assessment.

Guidelines for Requirement R4:

TheAfter a voltage excursion event, the goal of the assessment required in Requirement R4 is to evaluate: (1) whether the UVLS Program resolved the undervoltage issues for an event that occurred on the system. It is expected that, and (2) the performance of the UVLS Program equipment. The assessment should include event data analysis, such as the relevant sequence of events leading to the undervoltage conditions (e.g., Contingencies, operation of protection systems, and RAS) and field measurements useful to analyzing the behavior of the system. A comprehensive description of the UVLS Program operation should be presented, including conditions of the trigger (e.g., voltage levels, time delays) and amount of load shed for each affected substation. Assessment of the event shall beis performed to evaluate the level of performance of the program for the event of interest and to identify deficiencies to be included in a CAP per Requirement R5. Misoperation of UVLS equipment is addressed as a deficiency. Reporting of UVLS equipment Misoperations are addressed by the NERC *Request for Data and Information, Protection System Misoperation Data Collection*.[3]

The studies and analyses showing the effectiveness of the UVLS Program can be similar to what is required in Requirements R1 and R3, but should include a clear link between the evaluation of

[2] It is understood that the term material change is not transportable on a continent-wide basis. This determination must be made by the Planning Coordinator or Transmission Planner and should be accompanied by documentation to support the technical rationale for determining material changes.
[3] Id.

effectiveness (in studies using simulations) and the analysis of the event (with measurements and event data) that actually occurred. For example, differences between the expected and actual system behavior for the event of interest should be discussed and modeling assumptions should be evaluated. Important discrepancies between the simulations and the actual event should be investigated.

Considering the importance of an event that involves the operation of a UVLS Program, the 12- calendar-month period provides adequate time to analyze the event and perform an assessment while identifying deficiencies within a reasonable time. This time period is also required in PRC- 006-1.

Guidelines for Requirement R5:

Requirement R5 promotes the prudent correction of an identified problem during the assessment ~~evaluations~~ of ~~each~~a UVLS Program. Per Requirements R3 and R4, an assessment of an active UVLS Program is triggered:

- Within 12 calendar months of an event that resulted in a voltage excursion for which the program was designed to operate~~.~~
- At least once every 60 calendar months. The default time frame of 60 calendar months or less between assessments has the intention to assure that the cumulative changes to the network and operating condition affecting the UVLS Program are evaluated~~.~~

Since every UVLS is unique, if material changes are made to system topology or operating conditions, the Planning Coordinator or Transmission Planner will decide the degree to which the change in topology or operating condition becomes a material change sufficient to trigger an assessment of the existing UVLS Program.

A CAP is a list of actions and an associated timetable for implementation to remedy a specific problem. It is a proven tool for resolving operational problems. Per Requirement R5, the Planning Coordinator or Transmission Planner is required to develop a CAP and provide it to UVLS entities to accomplish the purpose of this requirement, which is to prevent future deficiencies in the UVLS Program, thereby minimizing risk to the system. Determining the cause of the deficiency is essential in developing an effective CAP to avoid future re-occurrence of the same problem. A CAP can be revised if additional causes are found.

Based on industry experience and operational coordination timeframes, ~~the drafting team believes that within~~ three calendar months from the date an assessment is completed is a reasonable time frame for development of a CAP, including time to consider alternative solutions and coordination of resources. The “within three calendar months” time frame is solely to develop a CAP, including its implementation schedule, and provide it to UVLS entities. It does not include the time needed for its implementation by UVLS entities. This implementation time frame is dictated within the CAP’s associated timetable for implementation, and the execution of the CAP according to its schedule is required in Requirement R2.

Guidelines for Requirements R6–R8

An accurate UVLS Program database is necessary for the Planning Coordinator or Transmission Planner to perform system reliability assessment studies and event analysis studies. Without accurate data, there is a possibility that annual reliability assessment studies that are performed by the Planning Coordinator or Transmission Planner can lead to erroneous results and therefore impact reliability. Also, without the accurate data, it is very difficult for the Planning Coordinator or Transmission Planner to duplicate a UVLS event and determine the root cause of the problem.

To support a UVLS Program database, it is necessary for each UVLS entity to provide accurate data to its Planning Coordinator. Each UVLS entity will provide the data according to the specified format and schedule provided by the Planning Coordinator. This is required in order for the Planning Coordinator to maintain and support a comprehensive UVLS Program database. By having a comprehensive database, the Planning Coordinator can embark on a reliability assessment or event analysis/benchmarking studies, identify the issues with the UVLS Program, and develop ~~remedial action plans~~Corrective Action Plans.

The UVLS Program database may include, but is not limited to the following:

- Owner and operator of the UVLS Program
- Size and location of customer load, or percent of connected load, to be interrupted

- Corresponding voltage set points and clearing times
- Time delay from initiation to trip signal
- Breaker operating times
- Any other schemes that are part of or impact the UVLS Programs, such as related generation protection, islanding schemes, automatic load restoration schemes, underfrequency load shedding (UFLS~~;~~), and RAS~~.~~

Additionally, the UVLS Program database ~~should~~is required to be updated annually (once every calendar year) by the Planning Coordinator. The intent here is for UVLS entities to review the data annually and provide changes to the Planning Coordinators so that Planning Coordinators can keep the databases current and accurate for performing event analysis and other assessments.

Finally, a Planning Coordinator is required to provide information to other Planning Coordinators and Transmission Planners within its Interconnection, and other functional entities with a reliability need, within 30 calendar days of receipt of a written request. Thirty calendar days was selected as the time frame as it is considered to be reasonable and well-accepted by the industry. Also, this requirement of sharing the database with applicable functional entities supports the directive provided by FERC that requires an integrated and coordinated approach to UVLS programs (Paragraph 1509 of FERC Order No. 693).

~~Version History~~

~~Version~~	~~Date~~	~~Action~~	~~Change Tracking~~
~~0~~	~~April 1, 2005~~	~~Effective Date~~	~~New~~

0	February 8, 2005	Adopted by NERC Board of Trustees	
0	March 16, 2007	Approved by FERC	
0	February 7, 2013	R2 and associated elements approved by NERC Board of Trustees for retirement as part of the Paragraph 81 project (Project 2013-02) pending applicable regulatory approval.	
0	November 21, 2013	R2 and associated elements approved by FERC for retirement as part of the Paragraph 81 project (Project 2013-02)	
1.0	November 13, 2014	Adopted by NERC Board of Trustees	Revisions made under Project 2008-02: Undervoltage Load Shedding (UVLS) & Underfrequency Load Shedding (UFLS) to address directive issued in FERC Order No. 763. Completed revision, merged and updated PRC-010-0, PRC-020-1, PRC-021-1, and PRC-022-1.

Rationale:

During development of this standard, text boxes were embedded within the standard to explain the rationale for various parts of the standard. Upon BOT approval, the text from the rationale text boxes was moved to this section.

Rationale for Applicability

This standard is applicable to Planning Coordinators and Transmission Planners that have or are developing a UVLS Program, and to Distribution Providers and Transmission Owners responsible for the ownership, operation, or control of UVLS equipment as required by the UVLS Program established by the Transmission Planner or Planning Coordinator. These Distribution Providers and Transmission Owners are referred to as UVLS entities for the purpose of this standard.

The applicability includes both the Planning Coordinator and Transmission Planner because either may be responsible for designing and coordinating the program based on agreements, memorandums of understanding, or tariffs.

The phrase "Planning Coordinator or Transmission Planner" provides the latitude for applicability to the entity that will perform the action. The expectation is not that both parties will perform the action, but rather that the Planning Coordinator and Transmission Planner will engage in discussion to determine the appropriate responsible entity.

Rationale for R1

In Paragraph 1509 from Order No. 693, FERC directed NERC to require an integrated and coordinated approach to all protection systems. The drafting team agrees that a lack of coordination among protection systems is a key risk to reliability, and that each Planning Coordinator or Transmission Planner that develops a UVLS Program should evaluate the program's viability and effectiveness prior to implementation. This evaluation should include studies and analyses used when developing the program that show implementation of the program resolves the identified undervoltage conditions that led to its design. These studies and analyses should also show that the UVLS Program is integrated through coordination with generator voltage ride-through capabilities and other protection and control systems. Though presented as separate items, the drafting team recognizes that the studies that show coordination considerations and that the program addresses undervoltage issues may be interrelated and presented as one comprehensive analysis.

In addition, Requirement R1 also requires the Planning Coordinator or Transmission Planner to provide the UVLS Program's specifications and implementation schedule to applicable UVLS entities to implement the program. It is noted that studies to evaluate the effectiveness of the program should be completed prior to providing the specifications and schedule.

Rationale for R2

UVLS entities must implement a UVLS Program or address any necessary corrective actions for a UVLS Program according to the specifications and schedule provided by the Planning Coordinator or Transmission Planner. If UVLS entities do not implement the UVLS Program

according to the specifications and schedule provided, the UVLS Program may not be effective and may not achieve its intended goal.

Rationale for R3

A periodic comprehensive assessment (detailed analysis) should be conducted to identify and catalogue the accumulated effects of minor changes to the system that have occurred since the last assessment was completed, and should include an evaluation of each UVLS Program to ensure the continued integration through coordination. This comprehensive assessment supplements the NERC Reliability Standard TPL-001-4 annual assessment requirement to evaluate the impact of protection systems.

Based on the drafting team's knowledge and experience, and in keeping with time frames contained in similar requirements from other PRC Reliability Standards, 60 calendar months was determined to be the maximum amount of time allowable between assessments. Assessments will be performed sooner than the end of the 60-calendar month period if the Planning Coordinator or Transmission Planner determines that there are material changes to system topology or operating conditions that affect the performance of a UVLS Program. Note that the 60-calendar-month time frame would reset after each assessment.

Rationale for R4

A UVLS Program not functioning as expected during a voltage excursion event for which the UVLS Program was designed to operate presents a critical risk to system reliability. Therefore, a timely assessment to evaluate (1) whether the UVLS Program resolved the undervoltage issues and (2) the performance of the UVLS Program equipment associated with the applicable event is essential. The 12 calendar months (from the date of the event) provides adequate time to coordinate with other Planning Coordinators, Transmission Planners, Transmission Operators, and UVLS entities, simulate pre- and post-event conditions, and complete the performance assessment.

Rationale for R5

If program deficiencies are identified during an assessment ~~of a UVLS Program~~ performed in either Requirement R3 or R4, the Planning Coordinator or Transmission Planner must develop a Corrective Action Plan (CAP) to address the deficiencies. Based on the drafting team's knowledge and experience with UVLS studies, three calendar months was determined to provide a judicious balance between the reliability need to address deficiencies expeditiously and the time needed to consider potential solutions, coordinate resources, develop a CAP and implementation schedule, and provide the CAP and schedule to UVLS entities.

It is noted that the three-month time frame is only to develop the CAP and provide it to UVLS entities and does not encompass the time UVLS entities have to implement the CAP. Requirement R2 requires UVLS entities to execute the CAP according to the schedule provided by the Planning Coordinator or Transmission Planner.

Rationale for R6

Having accurate and current data is required for the Planning Coordinator to perform undervoltage studies and for use in event analyses. Requirement R6 supports this reliability need by requiring the Planning Coordinator to update its UVLS Program database at least once each calendar year.

Rationale for R7

Having accurate and current data is required for the Planning Coordinator to perform undervoltage studies and for use in event analyses. -Requirement R7 supports this reliability need by requiring the UVLS entity to provide UVLS Program data in accordance with specified parameters.

Rationale for R8

Requirement R8 supports the integrated and coordinated approach to UVLS programs directed by Paragraph 1509 of Order No. 693 by requiring that UVLS Program data be shared with neighboring Planning Coordinators and Transmission Planners within a reasonable time period. Requests for the database should also be fulfilled for those functional entities that have a reliability need for the data (such as the Transmission Operators that develop System Operating Limits and Reliability Coordinators that develop Interconnection Reliability Operating Limits).

Frequently Asked Questions

To succinctly address common comment themes that require drafting team response on Project 2008-02 UVLS (proposed PRC-010-1), the drafting team provides the following discussion in the construct of an FAQ format.

Introduction

This Frequently Asked Questions (FAQ) document was created during the development of PRC-010-1 (*Undervoltage Load Shedding*)[4,5] to succinctly address common comment themes with respect to the approach and intent of the Project 2008-02 Undervoltage Load Shedding (UVLS)[6] standard drafting team ("drafting team"). This FAQ document is the outcome of comments received during comment periods and multiple outreach sessions with industry. All comments submitted by industry during comment periods may be reviewed on the project page.

Subsequent to the adoption of PRC-010-1, the UVLS drafting team made minor revisions to the standard address the UVLS Misoperation identification and correction.[7] This FAQ document was amended to reflect up the approach and intent of the drafting team during the development of PRC-010-2 concerning Misoperation of UVLS equipment.

Purpose of Standard Revision

1) What is the basis for a revision of the existing UVLS standards?

The initial input into a revision of the existing UVLS standards is FERC Order No. 693,[8] Paragraph 1509, which directed the ERO to develop a modification of PRC-010-0 that "requires that an integrated and coordinated approach be included in all protection systems on the Bulk-Power System, including generators and transmission lines, generators' low voltage ride through capabilities, and UFLS and UVLS programs." In addition, *The Final Report on the August 14, 2003 Blackout in the United States and Canada: Causes and Recommendations*[9] ("August 14 Blackout Report") showed that proper coordination would have mitigated effects if UVLS was used as a tool.

[4] http://www.nerc.com/_layouts/PrintStandard.aspx?standardnumber=PRC-010-1&title=Undervoltage%20Load%20Shedding.
[5] Adopted by the NERC Board of Trustees on November 14, 2014.
[6] http://www.nerc.com/pa/Stand/Pages/Project-2008-02-Undervoltage-Load-Shedding.aspx
[7] Refer to Project 2010-05.1, which developed PRC-004-3 (Protection System Misoperation Identification and Correction) concurrently with the development of PRC-010-1. (http://www.nerc.com/pa/Stand/Pages/Project 2010-05_Protection_System_Misoperations.aspx).
[8] http://www.nerc.com/docs/docs/ferc/order_693.pdf.
[9] http://energy.gov/sites/prod/files/oeprod/DocumentsandMedia/BlackoutFinal-Web.pdf.

Additional inputs included 1) recommendations from the NERC System Protection and Control Subcommittee (SPCS) in its December 2010 *Technical Review of UVLS-Related Standards*[10] to combine the four existing UVLS standards, revise the applicability to entities responsible for UVLS program design, implementation, and coordination, specifically include a requirement for assessment of coordination between UVLS programs and all other protection systems, and differentiate post-event validation of UVLS program design from verifying correct operation of UVLS equipment; 2) the existing UVLS standards were not in the current results-based format; 3) the preceding revision of the underfrequency load shedding (UFLS) standards had similar types of requirements and had been completed under the construct of a consolidation; and 4) the Independent Expert Review Panel recommendations, which included an evaluation of the existing standards' applicability and level of specificity.

The drafting team agrees that a lack of coordination among protection systems is a key risk to reliability. As part of the revision to address this, the drafting team also agreed that an evaluation and consolidation of the existing UVLS standards was necessary to meet current Reliability Standard development initiatives and to provide clear, comprehensive requirements to address the application and coordination of UVLS.

2) UVLS programs are not mandatory—is compliance for an optional tool necessary?

The drafting team asserts that a key takeaway from the August 14 Blackout Report is that coordination of UVLS with other protection systems could have mitigated the effects if UVLS was used as a tool. Although the use of UVLS is not mandatory, if it is determined that this system preservation measure is necessary to support reliability and a UVLS program is installed, the program needs to be properly coordinated, implemented, and assessed due to the inherent associated reliability risks. As such, there needs to be a level of performance required to properly protect system reliability. Of note, PRC-010-1 and PRC-010-2 apply to the defined term "UVLS Program," which limits the standard's applicability to only those undervoltage-based load shedding programs whose performance has an impact on system reliability.[11]

Coordination with Project 2009-03 Emergency Operations

3) EOP-003-2 has potential redundant requirements with proposed PRC-010-1—how is this being addressed?

As part of its five-year review, Project 2009-03 – Emergency Operations (EOP) identified EOP-003-2 (*Load Shedding Plans*),[12] Requirements R2, R4, and R7 as being more properly covered by

[10] http://www.nerc.com/docs/pc/spctf/PRC-010_022%20Report_Approved_20101208.pdf.
[11] The term "UVLS Program" used herein was adopted by the NERC Board of Trustees on November 14, 2014.
[12] http://www.nerc.com/_layouts/PrintStandard.aspx?standardnumber=EOP-003-2&title=Load%20Shedding%20Plans.

Project 2008-02 – UVLS. Both projects were strategically coordinated to move in lockstep from a timing perspective to address these requirements. Project 2009-03 – EOP proposed to revise and consolidate EOP-001-2.1b (*Emergency Operations Planning*),[13] EOP-002-3 (Capacity and Energy Emergencies),[14] and EOP-003-2 to create EOP-011-1, will retire the noted EOP-003-2 requirements (among other revisions), and the Project 2008-02 – UVLS *Mapping Document* will show how PRC-010-1 encompasses the retired content accordingly. Slated to have aligning effective dates, both EOP-011-1 (*Emergency Operations*)[15] and PRC-010-1 will be posted and balloted separately but concurrently, so that industry stakeholders will be able to clearly evaluate the transition. Please see the posted Project 2008-02 UVLS Project Coordination Plan for more information.

"UVLS Program" Definition

4) Why is the introduction of the new defined term "UVLS Program" necessary?

The drafting team found it necessary to introduce the term "UVLS Program" for inclusion in the *Glossary of Terms Used in NERC Reliability Standards*[16] ("NERC Glossary") because different types of UVLS systems need to be treated appropriately with respect to reliability requirements. Therefore, the term establishes which UVLS systems PRC-010-1 will apply to an: "automatic load shedding program consisting of distributed relays and controls used to mitigate undervoltage conditions impacting the Bulk Electric System (BES), leading to voltage instability, voltage collapse, or Cascading. Centrally controlled undervoltage-based load shedding is not included."

The definition is meant to inherently exclude locally-applied relays that are designed to protect a contained area or, in other words, are not designed to mitigate wide-area voltage collapse. This exclusion is not explicit in these terms in the enforceable language of the definition since the meaning and measurement of "local" or "wide-area" varies greatly on a continent-wide basis and could potentially be interpreted differently by auditors and the applicable functional entities. Therefore, the definition as written is meant to provide flexibility for the Planning Coordinator or Transmission Planner to determine if a UVLS system falls under the defined term with respect to its impact on the reliability of the BES (voltage instability, voltage collapse, or Cascading). To further support the intended exclusion, further discussion and an example are provided on in the PRC-010-1 and PRC-010-2 Guidelines and Technical Basis section under the heading "Guidelines for UVLS Program Definition."

[13] http://www.nerc.com/_layouts/PrintStandard.aspx?standardnumber=EOP-001-2.1b&title=Emergency%20Operations%20Planning.
[14] http://www.nerc.com/_layouts/PrintStandard.aspx?standardnumber=EOP-002-3&title=Capacity%20and%20Energy%20Emergencies.
[15] http://www.nerc.com/_layouts/PrintStandard.aspx?standardnumber=EOP-011-1&title=Emergency%20Operations.
[16] http://www.nerc.com/pa/Stand/Glossary%20of%20Terms/Glossary_of_Terms.pdf.

The definition does explicitly note that the term excludes centrally controlled undervoltage-based load shedding. This type of load shedding is excluded because the drafting team asserts that the design and characteristics of centrally controlled undervoltage-based load shedding are commensurate with those of a Special Protection System (SPS) or Remedial Action Scheme (RAS) and should therefore be subject to SPS or RAS-related Reliability Standards. See PRC-010-1 and PRC-010-2 Guidelines and Technical Basis section under the heading "Guidelines for UVLS Program Definition" for further discussion.

5) If the definition excludes certain types of UVLS, does this preclude an "integrated" approach (FERC Order No. 693, Paragraph 1509)?

The defined term "UVLS Program" clarifies which UVLS systems are subject to the requirements in PRC-010-1 and PRC-010-2. The resulting exclusions from these versions of the standard do not preclude an "integrated" approach because the standard requires that an entity coordinate with all other protection and control systems as necessary, which may include other types of UVLS (i.e., locally-applied UVLS relays and centrally controlled undervoltage-based load shedding).

6) Where will centrally controlled undervoltage-based load shedding be covered?

As explained immediately above, the Requirements of PRC-010-1 and PRC-010-2 are applicable to the proposed NERC Glossary term "UVLS Program," which excludes centrally controlled undervoltage-based load shedding because its design and characteristics are commensurate with those of an SPS or RAS. However, the NERC Glossary during the development of PRC-010-1 definition of "Special Protection System" excluded UVLS. Therefore, the work under Project 2010-05.2 – Special Protection Systems (Phase 2 of Protection Systems) combined the NERC Glossary definition of "Special Protection System" into the single term "Remedial Action Scheme."[17] The definition revisions specifically excluded UVLS Programs, therefore including centrally controlled undervoltage-based shedding.

Consequently, the introduction of the term "UVLS Program" and the conforming revision to the term "Remedial Action Scheme" explicitly clarifies that RAS-related standards are applicable to centrally controlled undervoltage-based load shedding. The implementation plan for the revised definition of "Remedial Action Scheme" will address entities that will have newly identified RAS resulting from the application of the defined term.

Similar to the coordination effort with Project 2009-03 – EOP explained above, Project 2008-02 – UVLS and Project 2010-05.2 – SPS were coordinated to ensure that the effective dates of the adopted definitions of "Remedial Action Scheme" and "UVLS Program," the PRC-010-1 and PRC-010-1 Reliability Standards, and all associated retirements align.

[17] Adopted by the NERC Board of Trustees on November 14, 2014.

7) Is the term "UVLS Program" inclusive of a collection of independent UVLS relays?

No; multiple independent relays do not constitute a program. While the definition stipulates that a UVLS Program consists of distributed relays and controls, the definition specifies that it must be "[a]n automatic load shedding program, consisting of distributed relays and controls, used to mitigate undervoltage conditions impacting the Bulk Electric System(BES), leading to voltage instability, voltage collapse, or Cascading. Centrally controlled undervoltage-based load shedding is not included."

Applicability

8) What is meant by the phrase "Planning Coordinator or Transmission Planner"?

The PRC-010-1 and PRC-010-2 Reliability Standards are applicable to both the Planning Coordinator and Transmission Planner because either may be responsible for designing and coordinating the program based on agreements, memorandums of understanding, or tariffs. The phrase "Planning Coordinator or Transmission Planner" provides the flexibility for applicability to the entity that will perform the action. The expectation is not that both parties will perform the action, but rather that the Planning Coordinator and Transmission Planner will engage in discussion to determine the appropriate responsible entity. In addition, the requirements containing this phrase have specific language to qualify the responsible entity. For example, Requirement R1 states: "Each Planning Coordinator or Transmission Planner *that is developing* a UVLS Program shall . . ." This language provides clarity that the applicable entity would be the one that is developing the program.

9) Why is the Transmission Operator not included?

While the Transmission Operator may be involved with UVLS Program activities, the drafting team did not identify any required performance for the Transmission Operator that was necessary to capture within PRC-010-1 and PRC-010-2, since the Transmission Operator does not have the resources necessary to implement program specifications. If responsibilities are delegated to the Transmission Operator by the Transmission Owner, the Transmission Owner is still the accountable party.

To the extent that the Transmission Operator is required to have knowledge of system relays and protection systems, the drafting team notes that this requirement is covered under PRC-001-1.1 (*System Protection Coordination*),[18] Requirement R1. It is also noted that manual load shedding, for which the Transmission Operator is responsible, is not in the purview of PRC-010-1 and PRC-

[18] http://www.nerc.com/_layouts/PrintStandard.aspx?standardnumber=PRC-001-1.1&title=System%20Protection%20Coordination.

010-2, as it is covered under current EOP-003-2 and will subsequently be covered by proposed EOP-011-1 (see Project 2009-03 – Emergency Operations).

10) What about UVLS schemes owned by Transmission Owners, Distribution Providers, or Transmission Operators that are not required by the planner?

The PRC-010-1 and PRC-010-2 Reliability Standards are applicable to the term "UVLS Program." The drafting team notes that, by its defining attributes, a UVLS Program would be required and developed by a Planning Coordinator or Transmission Planner. The nature of a UVLS scheme developed or required by a Distribution Provider, Transmission Operator, or Transmission Owner would not meet the attributes of the defined term and would therefore not have the design and characteristics necessary to be subject to the requirements of PRC-010-1 and PRC-010-2.

Requirements R1, R3, R4, and R5

11) What is required to evaluate the coordination referenced in Requirement R1, part 1.2?

Requirement R1 requires each Planning Coordinator or Transmission Planner that develops a UVLS Program to evaluate the program's viability and effectiveness prior to implementation. This evaluation should include studies and analyses used when developing the program that show implementation of the program resolves the identified undervoltage issues that led to its design. These studies and analyses should also show that the UVLS Program is integrated through coordination with generator voltage ride-through capabilities and other protection and control systems. As such, the requirement is meant to provide flexibility for an entity to make the proper determinations, including the considerations for coordination, with respect to program effectiveness based on system characteristics. For further guidance on and examples of coordination considerations, please see the portion of the Guidelines and Technical Basis section under the Requirement R1 heading.

12) Requirements R1, R3, and R4 seem to all require evaluations of program effectiveness—how are they different?

Requirements R1, R3, and R4 do require evaluations of program effectiveness, but they are each at distinct points in time.

Requirement R1 requires evaluation of program effectiveness (by way of the qualifying parts) at the onset of program development, or during the initial planning stage, prior to implementation. Requirement R3 requires the same objectives of an evaluation of effectiveness, but at the point of a mandatory periodic review (at least once every 60 calendar months). Requirement R4 addresses the performance of a UVLS Program after an event (for applicable voltage excursion)

to evaluate whether the UVLS Program resolved the undervoltage issues associated with the event.

It is noted that, because of the separate activities of each requirement, UVLS Program deficiencies found as a result of the assessments performed in Requirement R3 or R4 would not be violations of Requirement R1.

13) Requirement R4 would require the Planning Coordinator or Transmission Planner to review all voltage excursions—isn't this unduly burdensome?

While Requirement R4 essentially requires the Planning Coordinator or Transmission Planner to review all voltage excursions to see if they fall below the initializing set points of the UVLS Program, the drafting team contends that it will be clearly evident if voltage falls below the UVLS threshold because either a) UVLS devices will operate; or b) the system will experience the adverse conditions the UVLS Program was installed to mitigate.

In addition, the drafting team acknowledges that the Planning Coordinator or Transmission Planner may not have the ability to know when voltage excursions are occurring since they are not operating entities. However, a process for the Transmission Operator, Transmission Owner, or Distribution Provider to notify the Transmission Planner or Planning Coordinator of such voltage excursion events is consistent with standard utility practice.

14) PRC-022-1 required the analysis of UVLS Misoperations. How is this addressed in PRC-010-1?

One of the recommendations in the SPCS report was to clearly differentiate between the post-event process of validating the effectiveness of the UVLS program design, its coordination with other protection and control systems, and the potential need to modify the program design (activities addressed in PRC-010-1) and the process of verifying correct operation of UVLS equipment. Because PRC-010-1 was not specific concerning the Misoperation of UVLS equipment, the drafting team made a subsequent revision creating PRC-010-2. Version two (PRC-010-2) now requires that the assessment according to Requirement R4 include the performance (i.e., operation or non-operation) of the UVLS Program equipment.

Relative to the assessment, Requirement R5 requires that a Corrective Action Plan be developed to address any identified deficiencies. This structure ensures that UVLS Program equipment is assessed to identify any Misoperation which could affect BES reliability. Although, the UVLS drafting team maintained during development of PRC-010-1 that verifying correct operation of UVLS equipment should be addressed in PRC-004, the drafting team included UVLS that is intended to trip one or more BES Elements in the proposed PRC-004-5.

Requirements R6, R7, and R8

15) Do Requirements R6, R7, and R8 overlap with the requirements of MOD-032-1?

While both MOD-032-1 (*Data for Power System Modeling and Analysis*)[19] and Requirements R6, R7, and R8 of PRC-010-1 and PRC-010-2 address data requirements, MOD-032-1 establishes overarching modeling data requirements with respect to consistency in format and reporting procedures, whereas the PRC-010-1 and PRC-010-2 requirements address the need to maintain and share data and databases for the purposes of studies for use in event analyses for UVLS Programs specifically. While Reliability Standards in general may have overlap in this manner, the activities in these requirements remain distinctly different.

16) Requirements R6, R7, and R8 appear to be administrative — doesn't this conflict with Paragraph 81 criteria?[20]

Proper maintenance and timely sharing of UVLS Program data as required by Requirements R6, R7, and R8 is necessary to inform the Planning Coordinator or Transmission Planner's studies and analyses. While administrative tasks are required, the tasks have a core reliability-based need.

In addition, Requirements R6, R7, and R8 were written to emulate FERC-approved PRC-006-2 (*Automatic Underfrequency Load Shedding*)[21,22] data requirements. While some of these analogous requirements in PRC-006-2 are listed as candidates for Phase 2 of the Paragraph 81 project, they are not yet approved as meeting the criteria; furthermore, the Independent Expert Review Panel has recommended that these Paragraph 81 candidates not be included for deletion, citing that "there should be a clear expectation for Planning Coordinators to share data necessary to determine their UFLS program parameters."

[19] http://www.nerc.com/_layouts/PrintStandard.aspx?standardnumber=MOD-032-1&title=Data%20for%20Power%20System%20Modeling%20and%20Analysis.
[20] Refer to Standards Independent Expert Review Project (IERP). http://www.nerc.com/pa/Stand/Standard%20Development%20Plan/Standards_Independent_Experts_Review_Project_Report-SOTC_and_Board.pdf.
[21] http://www.nerc.com/_layouts/PrintStandard.aspx?standardnumber=PRC-006-2&title=Automatic%20Underfrequency%20Load%20Shedding.
[22] Adopted by the NERC Board of Trustees on November 14, 2014.

NERC
NORTH AMERICAN ELECTRIC RELIABILITY CORPORATION

Implementation Plan

PRC-010-2 – Undervoltage Load Shedding

Project 2008-02.2 – Phase 2 UVLS: Misoperations

Requested Approvals

- PRC-010-2 – Undervoltage Load Shedding

Requested Retirements

- PRC-010-1 – Undervoltage Load Shedding[1]

Prerequisite Approvals

- PRC-004-5 — Protection System Misoperation Identification and Correction

General Considerations

The implementation period is intended to align with the Effective Date of PRC-010-1 or occur soon thereafter in order to incorporate certain aspects of PRC-022-1 – Under-Voltage Load Shedding Program Performance into PRC-004. PRC-022-1 was retired by PRC-010-1. The Implementation Plan for PRC-010-1[2] allows twelve (12) calendar months after applicable approvals. Version five of PRC-004 is including undervoltage load shedding (UVLS) that is intended to trip one or more BES Elements.

Applicable Entities

- Planning Coordinator
- Transmission Planner
- Undervoltage load shedding (UVLS) entities – Distribution Providers and Transmission Owners responsible for the ownership, operation, or control of UVLS equipment as required by the UVLS Program established by the Transmission Planner or Planning Coordinator

[1] PRC-010-1 was adopted by the NERC Board of Trustees on November 13, 2014.

[2] Refer to Project 2008-02.2 on the NERC website. (http://www.nerc.com/pa/Stand/Pages/Project-2008-02_2-Phase-2-Undervoltage-Load-Shedding-UVLS-Misoperations.aspx)

Effective Dates

PRC-010-2 shall become effective on the later of the first day following the Effective Date of PRC-010-1 or the first day of the first calendar quarter after the standard is approved by an applicable governmental authority or as otherwise provided for in a jurisdiction where approval by an applicable governmental authority is required for a standard to go into effect. Where approval by an applicable governmental authority is not required, the standard shall become effective on the later of the first day following the Effective Date of PRC-010-1 or the first day of the first calendar quarter after the date the standard is adopted by the NERC Board of Trustees or as otherwise provided for in that jurisdiction.

NERC
NORTH AMERICAN ELECTRIC RELIABILITY CORPORATION

Unofficial Comment Form

Project 2008-02.2 Phase 2 UVLS: Misoperations

DO NOT use this form for submitting comments. Use the electronic form to submit comments on the standards. The formal comment period is **open through 8 p.m. Tuesday, April 7, 2015**.

If you have questions, contact Scott Barfield-McGinnis, Standards Developer at scott.barfield@nerc.net or by telephone at 404-446-9689.

Project 2008-02.2 – Phase 2 Undervoltage Load Shedding: Misoperations

Project Development Background

The undervoltage load shedding (UVLS) standard drafting team (SDT) was tasked with addressing Misoperation of UVLS equipment during the development of version one of PRC-010 and version three of PRC-004 in Project 2010-05.1 (i.e., Misoperation). This project has been named phase 2 of Project 2008-02 (i.e., UVLS) for clarity purposes. Each SDT for these two projects outlined work necessary to address Misoperation of UVLS equipment. This work was deferred, at the time, because both PRC-010-1 and PRC-004-3 contained dependencies with other projects requiring their completion. This phase two is a continuation of the work performed under the Standards Authorization Request (SAR) for Project 2008-02.

The revisions proposed in Reliability Standard PRC-010-2 meet the following objectives:

- Address the UVLS Misoperation the remaining work due to the retirement of PRC-022-1 (*Undervoltage Load Shedding Program Performance*) during the development of PRC-010-1 (*Undervoltage Load Shedding*)
- Ensure UVLS equipment (i.e., operation or non-operation) within the UVLS Program is assessed and mitigated

Basis for Revision

Originally, Misoperation of UVLS equipment was planned to be appended to a future version of PRC-004 (*Protection System Misoperation Identification and Correction*). The SDT is proposing a two-prong approach by revising both PRC-004 and PRC-010 to address the concern of identifying Misoperations of UVLS equipment in PRC-022-1.

First, the SDT proposes an addition to the Applicability section of PRC-004 to include UVLS that is intended to trip one or more Bulk Electric System (BES) Elements. This is consistent with previous communication

to industry about addressing Misoperation of UVLS equipment.[1] Entities will be required to address UVLS that trips a BES Element similarly to other Protection Systems in PRC-004. While the revision to PRC-004 consistent with the communicated approach, the SDT determined that the proposed revision fails to address the performance (operation or non-operations) of UVLS Program equipment not covered by the strict processes of PRC-004.

Second, the SDT is proposing clarifying revisions in PRC-010-2, Requirements R4 and R5 to address UVLS Program equipment performance. These revisions are not requiring UVLS entities to address UVLS protective relays not covered by the strict processes of PRC-004; however, PRC-010-2 is requiring UVLS entities to address the deficiencies (e.g., Misoperations) identified in the assessment performed by Planning Coordinator or Transmission Planner in Requirement R4. Deficiencies include the performance (operation or non-operation) issues of UVLS Program equipment. These deficiencies, if any, are addressed by the UVLS entities through a Corrective Action Plan (CAP) developed in Requirement R5 and executed by the UVLS entities in Requirement R2 of PRC-010.

The term "Misoperation" as defined by the *Glossary of Terms Used in NERC Reliability Standards* is not used within the Requirements of PRC-010; however, the term is used in the Guidelines and Technical Basis section of the standard to provide clarity that UVLS Program equipment deficiencies include Misoperations that are to be corrected by UVLS entities. The PRC-010-2 Reliability Standard mandates that UVLS entities are to correct the deficiencies identified by the Planning Coordinator or Transmission Planner, such as Misoperation of UVLS equipment. Deficiencies are identified through either the periodic assessment or an assessment performed following an event and included in a CAP to the UVLS entity. The structure used by the SDT allows the Planning Coordinator and Transmission Planner to assess UVLS equipment for Misoperation under PRC-010 rather than the Generator Owner, Transmission Owner, and Distribution Provider applicable to the strict processes of PRC-004.

The two-pronged approach ensures that any UVLS Program equipment containing a deficiency is identified and corrected under PRC-010 and UVLS that trips a BES Element under is corrected under PRC-004 to address the requirements in the retired PRC-022-1.

[1] Refer to Implementation Plan for PRC-010-1 (http://www.nerc.com/pa/stand/Pages/PRC0101RI.aspx) and PRC-010-1 (http://www.nerc.com/pa/Stand/Pages/ReliabilityStandards.aspx), Introduction in the Guidelines and Technical Basis, last paragraph.

Question

1. Do you agree that the Misoperation identification and correction of UVLS equipment as retired by PRC-022-1, Requirements R1 and R1.5 is addressed by the proposed revisions of PRC-004-5 and PRC-010-2? If not, please provide comments and suggestions to improve clarity.

   ☐ Yes
   ☐ No

   Comments:

NERC
NORTH AMERICAN ELECTRIC RELIABILITY CORPORATION

Violation Risk Factors and Violation Severity Level Justifications

PRC-004-3 – Protection System Misoperation Identification and Correction

Project 2010-05.1 – Protection System (Misoperations)

Violation Risk Factor and Violation Severity Level Justifications

This document provides the drafting team's justification for assignment of violation risk factors (VRFs) and violation severity levels (VSLs) for each requirement in: PRC-004-3 – Protection System Misoperation Identification and Correction.

Each primary requirement is assigned a VRF and a set of one or more VSLs. These elements support the determination of an initial value range for the base penalty amount regarding violations of requirements in FERC-approved Reliability Standards, as defined in the ERO Sanction Guidelines.

The Protection System Misoperations Standard Drafting Team applied the following NERC criteria and FERC Guidelines when proposing VRFs and VSLs for the requirements under this project.

NERC Criteria - Violation Risk Factors

High Risk Requirement

A requirement that, if violated, could directly cause or contribute to bulk electric system instability, separation, or a cascading sequence of failures, or could place the bulk electric system at an unacceptable risk of instability, separation, or cascading failures; or, a requirement in a planning time frame that, if violated, could, under emergency, abnormal, or restorative conditions anticipated by the preparations, directly cause or contribute to bulk electric system instability, separation, or a cascading sequence of failures, or could place the bulk electric system at an unacceptable risk of instability, separation, or cascading failures, or could hinder restoration to a normal condition.

Medium Risk Requirement

A requirement that, if violated, could directly affect the electrical state or the capability of the bulk electric system, or the ability to effectively monitor and control the bulk electric system. However, violation of a medium risk requirement is unlikely to lead to bulk electric system instability, separation, or cascading failures; or, a requirement in a planning time frame that, if

violated, could, under emergency, abnormal, or restorative conditions anticipated by the preparations, directly and adversely affect the electrical state or capability of the bulk electric system, or the ability to effectively monitor, control, or restore the bulk electric system. However, violation of a medium risk requirement is unlikely, under emergency, abnormal, or restoration conditions anticipated by the preparations, to lead to bulk electric system instability, separation, or cascading failures, nor to hinder restoration to a normal condition.

Lower Risk Requirement

A requirement that is administrative in nature and a requirement that, if violated, would not be expected to adversely affect the electrical state or capability of the bulk electric system, or the ability to effectively monitor and control the bulk electric system; or, a requirement that is administrative in nature and a requirement in a planning time frame that, if violated, would not, under the emergency, abnormal, or restorative conditions anticipated by the preparations, be expected to adversely affect the electrical state or capability of the bulk electric system, or the ability to effectively monitor, control, or restore the bulk electric system. A planning requirement that is administrative in nature.

FERC Violation Risk Factor Guidelines

The standard drafting team (SDT) also considered consistency with the FERC Violation Risk Factor Guidelines for setting VRFs:[1]

Guideline (1) — Consistency with the Conclusions of the Final Blackout Report

The Commission seeks to ensure that Violation Risk Factors assigned to Requirements of Reliability Standards in these identified areas appropriately reflect their historical critical impact on the reliability of the Bulk-Power System.

In the VRF Order, FERC listed critical areas (from the Final Blackout Report) where violations could severely affect the reliability of the Bulk-Power System: [2]

- Emergency operations
- Vegetation management
- Operator personnel training
- Protection systems and their coordination

[1] *N. Am. Elec. Reliability Corp.*, 119 FERC ¶ 61,145 (2007) ("VRF Order"), *order on reh'g and compliance filing*, 120 FERC ¶ 61,145 (2007) ("VRF Rehearing Order").
[2] *Id.* at fn 15.

- Operating tools and backup facilities
- Reactive power and voltage control
- System modeling and data exchange
- Communication protocol and facilities
- Requirements to determine equipment ratings
- Synchronized data recorders
- Clearer criteria for operationally critical facilities
- Appropriate use of transmission loading relief

Guideline (2) — Consistency within a Reliability Standard

The Commission expects a rational connection between the sub-Requirement Violation Risk Factor assignments and the main Requirement Violation Risk Factor assignment.

Guideline (3) — Consistency among Reliability Standards

The Commission expects the assignment of Violation Risk Factors corresponding to Requirements that address similar reliability goals in different Reliability Standards would be treated comparably.

Guideline (4) — Consistency with NERC's Definition of the Violation Risk Factor Level

Guideline (4) was developed to evaluate whether the assignment of a particular Violation Risk Factor level conforms to NERC's definition of that risk level.

Guideline (5) — Treatment of Requirements that Co-mingle More Than One Obligation

Where a single Requirement co-mingles a higher risk reliability objective and a lesser risk reliability objective, the VRF assignment for such Requirements must not be watered down to reflect the lower risk level associated with the less important objective of the Reliability Standard.

VRF Discussion

The discussion below in the tables addresses how the SDT considered FERC's VRF Guidelines 1 through 5. PRC-004-3 – Protection System Misoperation Identification and Correction is a

revision of PRC-004-2.1a – Analysis and Mitigation of Transmission and Generation Protection System Misoperations and combines the reliability intent of the two legacy standards PRC-003-1 and PRC-004-2.1a.

The proposed PRC-004-3 Reliability Standard has six (6) discrete requirements that incorporate and enhance the intent of the requirements of PRC-004-2.1a and PRC-003-1.[3] First, the revised standard requires the Transmission Owner, Generator Owner, and Distribution Provider to review each BES interrupting device operation meeting the criteria in Requirement R1, which includes: when caused by a Protection System operation or by manual intervention in response to a Protection System failure to operate and identify each that is a Misoperation; regardless of whether the BES interrupting device owner owns all or part of the Composite Protection System; and when BES interrupting device owner identified that its Protection System component(s) caused the BES interrupting device(s) operation.

Second, the BES interrupting device owner is required to notify the other Composite Protection System component owner(s) when the criteria in Requirement R2 are met, which includes: Composite Protection System ownership is shared with another owner; the BES interrupting device owner determined that a Misoperation occurred or cannot rule out a Misoperation; and the BES interrupting device owner determined that its Protection System component(s) did not cause the BES interrupting device(s) operation or is unsure.

Third, if a Transmission Owner, Generator Owner, or Distribution Provider is notified by a BES interrupting device owner that the Composite Protection System operated, it must review the operation according to Requirement R3. In most cases, Requirement R1 or R3 will reveal the cause of the Misoperation. If not, Requirement R4 mandates the entity perform investigative action(s) to determine the cause(s) as the fourth discrete Requirement. If a cause is not identified, the entity either may continue its investigation until a cause is identified or the entity may write a declaration that no cause was identified. If a cause is identified, the entity advances to the fifth Requirement.

In Requirement R5, the entity whose Protection System component was identified as the cause of the Misoperation must either develop a Corrective Action Plan (CAP) or explain in a declaration why it cannot correct the cause of the Misoperation. In developing a Corrective Action Plan (CAP) for the identified Protection System component(s), the entity must perform an evaluation of the CAP's applicability to the entity's other Protection Systems including other locations. If the entity determines that corrective actions are beyond the entity's control or would not improve BES reliability, it must explain this in a declaration why no further corrective actions will be taken.

In the last Requirement R6, the entity must implement and complete the CAP. The entity must update the CAP during implementation when actions or timetables change.

[3] The Reliability Standard PRC-003-1 – Regional Procedure for Analysis of Misoperations of Transmission and Generation Protection Systems requires Regional Entities to establish procedures for analysis of Misoperations.

The requirements of the proposed PRC-004-3 do not map, one-to-one, with the Requirements of the two legacy standards, PRC-003-1 and PRC-004-2.1a. The new Requirements comingle various reliability attributes of the legacy standards with precise reliability objectives. In developing the new VRFs for the Requirements of PRC-004-3, the Standard Drafting Team carefully considered the NERC criteria for developing VRFs, as well as the FERC VRF guidelines. The VRFs of the FERC approved PRC-004-2.1a – Analysis and Mitigation of Transmission and Generation Protection System Misoperations (R1 & R2 – High VRF), PRC-004-WECC-1 – Protection System and Remedial Action Scheme Misoperation (R1 – Lower VRF), PRC-016-0.1 – Special Protection System Misoperation (R2 – Medium VRF), and PRC-022-1 – Under-Voltage Load Shedding Program Performance (R1 & R1.5 – Medium VRF), all influenced (citing FERC VRF Guideline 3) the drafting team's VRF decisions, as such, the VRFs for PRC-004-3 Requirements R1 through R6 are assigned a VRF of Medium.

NERC Criteria - Violation Severity Levels

Violation Severity Levels (VSLs) define the degree to which compliance with a requirement was not achieved. Each requirement must have at least one VSL. While it is preferable to have four VSLs for each requirement, some requirements do not have multiple "degrees" of noncompliant performance and may have only one, two, or three VSLs.

Violation severity levels should be based on the guidelines shown in the table below:

Lower	Moderate	High	Severe
Missing a minor element (or a small percentage) of the required performance The performance or product measured has significant value as it almost meets the full intent of the requirement.	Missing at least one significant element (or a moderate percentage) of the required performance. The performance or product measured still has significant value in meeting the intent of the requirement.	Missing more than one significant element (or is missing a high percentage) of the required performance or is missing a single vital component. The performance or product has limited value in meeting the intent of the requirement.	Missing most or all of the significant elements (or a significant percentage) of the required performance. The performance measured does not meet the intent of the requirement or the product delivered cannot be used in meeting the intent of the requirement.

FERC Order on Violation Severity Levels

In its June 19, 2008 Order on Violation Severity Levels, FERC indicated it would use the following four guidelines for determining whether to approve VSLs:

Guideline 1: Violation Severity Level Assignments Should Not Have the Unintended Consequence of Lowering the Current Level of Compliance

Compare the VSLs to any prior Levels of Non-compliance and avoid significant changes that may encourage a lower level of compliance than was required when Levels of Non-compliance were used.

Guideline 2: Violation Severity Level Assignments Should Ensure Uniformity and Consistency in the Determination of Penalties

Guideline 2a: A violation of a "binary" type requirement must be a "Severe" VSL.

Guideline 2b: Do not use ambiguous terms such as "minor" and "significant" to describe noncompliant performance.

Guideline 3: Violation Severity Level Assignment Should Be Consistent with the Corresponding Requirement

VSLs should not expand on what is required in the requirement.

Guideline 4: Violation Severity Level Assignment Should Be Based on A Single Violation, Not on A Cumulative Number of Violations

. . . unless otherwise stated in the requirement, each instance of non-compliance with a requirement is a separate violation. Section 4 of the Sanction Guidelines states that assessing penalties on a per violation per day basis is the "default" for penalty calculations.

VRF and VSL Justifications – PRC-004-3, R1	
Proposed VRF	**Medium**
NERC VRF Discussion	A Violation Risk Factor of Medium is consistent with the NERC VRF Guidelines. Failure to review each BES interrupting device operation caused by a Protection System operation or by manual intervention in response to a Protection System failure to operate for Misoperation could, in the planning time frame, under emergency, abnormal, or restorative conditions anticipated by the preparations, directly and adversely affect the electrical state or capability of the bulk electric system, or the ability to effectively monitor, control, or restore the bulk electric system. Composite Protection System operations reviewed for proper operation by an owner is the first step in preventing the future severity of disturbances affecting a wider area, or potential equipment damage. However, violation of this requirement is not in itself likely to lead to bulk electric system instability, separation, or cascading failures.
FERC VRF G1 Discussion	Guideline 1- Consistency w/ Blackout Report: The blackout report and subsequent technical analysis noted that zone 3 relays increased the severity of the blackout. Reviewing Protection Systems for Misoperation, identifying an unnecessary operation and taking corrective actions would reduce the likelihood of reoccurrence. This requirement is consistent with Recommendation 8: Improve System Protection to Slow or Limit the Spread of Future Cascading Outages.
FERC VRF G2 Discussion	Guideline 2- Consistency within a Reliability Standard: This requirement has a single reliability activity associated with the reliability objective and no sub-Requirement(s) which allows a single VRF to be assigned; therefore no conflict(s) exist.
FERC VRF G3 Discussion	Guideline 3- Consistency among Reliability Standards:

VRF and VSL Justifications – PRC-004-3, R1	
	This requirement replaces one of the three performance components of PRC-004-2a, R1 (TO & DP) and R2 (GO), which both have a VRF of "High." The three performance components (paraphrased) are "analyze Protection System Misoperations," "develop a Correction Action Plan," and "implement a Corrective Action Plan". The performance activity that has been isolated in Requirement R1 of PRC-004-3, to "review" (similar to "analyze"), is consistent with similar requirements in Reliability Standards PRC-016-0.1 – Special Protection System Misoperations, R1 ("…shall analyze its SPS operations and maintain a record of all misoperations…") and PRC-022-1 – Under-Voltage Load Shedding Program Performance, R1 ("…shall analyze and document all UVLS operations and Misoperations.") which both have a VRF of Medium. A VRF of Medium does not inadvertently lower the current VRF of High in the former PRC-004-2.1a, Requirements R1 and R2, because this Requirement now provides a clear and concise single reliability activity whereas the former Requirement comingles multiple activities
FERC VRF G4 Discussion	Guideline 4- Consistency with NERC Definitions of VRFs: Failure to review each BES interrupting device operation caused by a Protection System operation or by manual intervention in response to a Protection System failure to operate for Misoperation could, in the planning time frame, under emergency, abnormal, or restorative conditions anticipated by the preparations, directly and adversely affect the electrical state or capability of the bulk electric system, or the ability to effectively monitor, control, or restore the bulk electric system. Protection System operations reviewed for proper operation by their owner(s) is the first step in preventing the future severity of disturbances affecting a wider area, or potential equipment damage.
FERC VRF G5 Discussion	Guideline 5- Treatment of Requirements that Co-mingle More than One Obligation: This requirement does not co-mingle reliability objectives of differing risk; therefore, the assigned VRF of Medium is consistent.

VRF and VSL Justifications – PRC-004-3, R1			
Proposed VSL			
Lower	**Moderate**	**High**	**Severe**
The responsible entity identified whether its Protection System component(s) caused a Misoperation in accordance with Requirement R1, but in more than 120 calendar days and less than or equal to 150 calendar days of the BES interrupting device operation.	The responsible entity identified whether its Protection System component(s) caused a Misoperation in accordance with Requirement R1, but in more than 150 calendar days and less than or equal to 165 calendar days of the BES interrupting device operation.	The responsible entity identified whether its Protection System component(s) caused a Misoperation in accordance with Requirement R1, but in more than 165 calendar days and less than or equal to 180 calendar days of the BES interrupting device operation.	The responsible entity identified whether its Protection System component(s) caused a Misoperation in accordance with Requirement R1, but in more than 180 calendar days of the BES interrupting device operation. OR The responsible entity failed to identify whether its Protection System component(s) caused a Misoperation in accordance with Requirement R1.
NERC VSL Guidelines	Meets NERC's VSL Guidelines—There is an incremental aspect to the VSL for tardiness and a binary aspect for failure. The VSL is entity size-neutral because performance is event-driven and not by individual assets.		

VRF and VSL Justifications – PRC-004-3, R1	
FERC VSL G1 Violation Severity Level Assignments Should Not Have the Unintended Consequence of Lowering the Current Level of Compliance	This requirement replaces one of the three performance components of PRC-004-2a, R1 (TO & DP) and R2 (GO). The three performance components (paraphrased) are “analyze Protection System Misoperations,” “develop a Correction Action Plan,” and “implement a Corrective Action Plan.” The VSLs are based on the three components and not individually as presented in the proposed PRC-004-3 standard. This VSL does not lower the current level of compliance because the former VSL was comingled with the other activities. The VSLs appropriately assess the severity of the violation with the failure to perform a review for Misoperation as Severe.
FERC VSL G2 Violation Severity Level Assignments Should Ensure Uniformity and Consistency in the Determination of Penalties Guideline 2a: The Single Violation Severity Level Assignment Category for "Binary" Requirements Is Not Consistent Guideline 2b: Violation Severity Level Assignments that Contain Ambiguous Language	Guideline 2a: This requirement is not binary; therefore, this criterion does not apply. Guideline 2b: This VSL does not use any ambiguous terminology, thereby supporting uniformity and consistency in the determination of similar penalties for similar violations.
FERC VSL G3	This VSL uses similar terminology to that used in the associated requirement, and is therefore consistent with this Requirement.

VRF and VSL Justifications – PRC-004-3, R1	
Violation Severity Level Assignment Should Be Consistent with the Corresponding Requirement	
FERC VSL G4 Violation Severity Level Assignment Should Be Based on A Single Violation, Not on A Cumulative Number of Violations	The VSL is based on a single violation and not cumulative violations.

VRF and VSL Justifications – PRC-004-3, R2	
Proposed VRF	**Medium**
NERC VRF Discussion	A Violation Risk Factor of Medium is consistent with the NERC VRF Guidelines. Failure to notify the other owner(s) of a Composite Protection System when the initiating owner determined its Protection System components did not cause a Misoperation or it did not rule out a Misoperation, could in the planning time frame, under emergency, abnormal, or restorative conditions anticipated by the preparations, directly and adversely affect the electrical state or capability of the bulk electric system, or the ability to effectively monitor, control, or restore the bulk electric system.

VRF and VSL Justifications – PRC-004-3, R2	
	Unresolved Misoperations of Composite Protection Systems owned by others that are not ruled out as a Misoperation could affect the electrical state or capability of the bulk electric system, or the ability to effectively monitor, control, or restore the bulk electric system by creating a gap in analysis.
FERC VRF G1 Discussion	Guideline 1- Consistency w/ Blackout Report: This is consistent with Recommendation 8: Improve System Protection to Slow or Limit the Spread of Future Cascading Outages. A lack of coordination on system protection was one of eight factors common to substantive outages prior to and including the August 14, 2003 Blackout. The initiating entity in the planning time frame is required to notify the other owner(s) of the Composite Protection System component(s) when it determines that (or is unsure whether)its component(s) did not cause a Misoperation or when it is unable to rule out a Misoperation of the Composite Protection System owned by others. This ensures that all owners review their equipment for proper operation which may include checking for proper coordination depending on the circumstances.
FERC VRF G2 Discussion	Guideline 2- Consistency within a Reliability Standard: This requirement has a single reliability activity associated with the reliability objective and no sub-Requirement(s) which allows a single VRF to be assigned; therefore no conflict(s) exist.
FERC VRF G3 Discussion	Guideline 3- Consistency among Reliability Standards:

VRF and VSL Justifications – PRC-004-3, R2	
	This requirement replaces one of the three performance components of PRC-004-2a, R1 (TO & DP) and R2 (GO), which both have a VRF of High. The three performance components (paraphrased) are "analyze Protection System Misoperations," "develop a Correction Action Plan," and "implement a Corrective Action Plan". This requirement and a VRF assignment of Medium is consistent, for example, with Reliability Standards FAC-008-3 – Facility Ratings, R7 ("…shall provide Facility Ratings (for its solely and jointly owned Facilities…"), MOD-012-0 – Dynamics Data for Modeling and Simulation of the Interconnected Transmission System, R2 ("…shall provide appropriate equipment characteristics and system data…"), IRO-015-1 – Special Protection System Data and Documentation, R1.1 ("…shall make notifications to other Reliability Coordinators of conditions in its Reliability Coordinator Area that may impact other Reliability Coordinator Areas."), and IRO-016-1 – Coordination of Real-time Activities Between Reliability Coordinators, R1 ("…shall contact the other Reliability Coordinator(s) to confirm that there is a problem and then discuss options and decide upon a solution to prevent or resolve the identified problem.") which all have a VRF of Medium. Other Protection Systems based Reliability Standards such as PRC-005-1b – Transmission and Generation Protection System Maintenance and Testing, R2 ("…shall provide documentation…"), PRC-016-0.1 – Special Protection System Misoperations, R3 ("…that owns an SPS shall provide documentation of the misoperation analyses…"), and PRC-017-0 – Special Protection System Maintenance and Testing, R2 ("…SPS shall provide documentation of the program…) all have a VRF of Lower; however, these requirements involve the administrative reporting to either the Regional Reliability Organization (now Regional Entity) or NERC and not a reliability function like the previously mentioned FAC-008-3 and MOD-012-0 Reliability Standards. As such, this Requirement R2 is assigned a VRF of Medium because it has a reliability need to be communicated to other owners.
FERC VRF G4 Discussion	Guideline 4- Consistency with NERC Definitions of VRFs:

VRF and VSL Justifications – PRC-004-3, R2			
	Failure to notify other entities to review each Protection System operation, identify Misoperations, and determine the cause could in the planning time frame, under emergency, abnormal, or restorative conditions anticipated by the preparations, directly and adversely affect the electrical state or capability of the bulk electric system, or the ability to effectively monitor, control, or restore the bulk electric system. Unresolved Misoperations of Composite Protection Systems owned by others that are not ruled out as a Misoperation could contribute to the severity of future disturbances affecting a wider area, or potential equipment damage.		
FERC VRF G5 Discussion	Guideline 5- Treatment of Requirements that Co-mingle More than One Obligation: This requirement does not co-mingle reliability objectives of differing risk; therefore, the assigned VRF of Medium is consistent.		
Proposed VSL			
Lower	**Moderate**	**High**	**Severe**
The responsible entity notified the other owner(s) of the Protection System component(s) in accordance with Requirement R2, but in more than 120 calendar days and less than or equal to 150 calendar days of the BES interrupting device operation.	The responsible entity notified the other owner(s) of the Protection System component(s) in accordance with Requirement R2, but in more than 150 calendar days and less than or equal to 165 calendar days of the BES interrupting device operation.	The responsible entity notified the other owner(s) of the Protection System component(s) in accordance with Requirement R2, but in more than 165 calendar days and less than or equal to 180 calendar days of the BES interrupting device operation.	The responsible entity notified the other owner(s) of the Protection System component(s) in accordance with Requirement R2, but in more than 180 calendar days of the BES interrupting device operation. OR

VRF and VSL Justifications – PRC-004-3, R2			
			The responsible entity failed to notify one or more of the other owner(s) of the Protection System component(s) in accordance with Requirement R2.
NERC VSL Guidelines	Meets NERC's VSL Guidelines—There is an incremental aspect to the VSL for tardiness and a binary aspect for failure. The VSL is entity size-neutral because performance is event-driven and not by individual assets.		
FERC VSL G1 Violation Severity Level Assignments Should Not Have the Unintended Consequence of Lowering the Current Level of Compliance	This requirement is new to the standard and had no previous level of compliance. Other Reliability Standards use a variety of VSLs ranging from a single severe level (i.e., binary), two levels, to four VSL levels. Some use a percentage as the failure of the number entities not notified; however, this would not be practical for this requirement as Composite Protection Systems that are owned by multiple entities is generally limited to one or two owners. The incremental increase in violation is consistent with the NERC Guidelines and is reasonable in consideration of the time periods provided by the Requirement.		
FERC VSL G2 Violation Severity Level Assignments Should Ensure Uniformity and Consistency in the Determination of Penalties	Guideline 2a: This requirement is not binary; therefore, this criterion does not apply. Guideline 2b:		

VRF and VSL Justifications – PRC-004-3, R2	
Guideline 2a: The Single Violation Severity Level Assignment Category for "Binary" Requirements Is Not Consistent Guideline 2b: Violation Severity Level Assignments that Contain Ambiguous Language	This VSL does not use any ambiguous terminology, thereby supporting uniformity and consistency in the determination of similar penalties for similar violations.
FERC VSL G3 Violation Severity Level Assignment Should Be Consistent with the Corresponding Requirement	This VSL uses similar terminology to that used in the associated requirement, and is therefore consistent with this Requirement.
FERC VSL G4 Violation Severity Level Assignment Should Be Based on A Single Violation, Not on A Cumulative Number of Violations	The VSL is based on a single violation and not cumulative violations.

VRF and VSL Justifications – PRC-004-3, R3	
Proposed VRF	**Medium**
NERC VRF Discussion	A Violation Risk Factor of Medium is consistent with the NERC VRF Guidelines. Failure of another Composite Protection System owner to review its component(s) for Misoperation, upon notification, for each BES interrupting device operation caused by a Protection System operation or by manual intervention in response to a Protection System failure to operate could in the planning time frame, under emergency, abnormal, or restorative conditions anticipated by the preparations, directly and adversely affect the electrical state or capability of the bulk electric system, or the ability to effectively monitor, control, or restore the bulk electric system. Composite Protection System operations reviewed for proper operation by the other owner(s) is an important step in preventing the future severity of disturbances affecting a wider area, or potential equipment damage.
FERC VRF G1 Discussion	Guideline 1- Consistency w/ Blackout Report: The blackout report and subsequent technical analysis noted that zone 3 relays increased the severity of the blackout. Reviewing Protection Systems for Misoperation, identifying an unnecessary operation and taking corrective actions would reduce the likelihood of reoccurrence. This requirement is consistent with Recommendation 8: Improve System Protection to Slow or Limit the Spread of Future Cascading Outages.
FERC VRF G2 Discussion	Guideline 2- Consistency within a Reliability Standard: This requirement has a single reliability activity associated with the reliability objective and no sub-Requirement(s) which allows a single VRF to be assigned; therefore no conflict(s) exist.

VRF and VSL Justifications – PRC-004-3, R3	
FERC VRF G3 Discussion	Guideline 3- Consistency among Reliability Standards: This requirement replaces one of the three performance components of PRC-004-2a, R1 (TO & DP) and R2 (GO). The three performance components (paraphrased) are "analyze Protection System Misoperations," "develop a Correction Action Plan," and "implement a Corrective Action Plan" which both have a VRF of High. This Requirement R3, to "review" (similar to "analyze"), comports with Reliability Standards PRC-016-0.1 – Special Protection System Misoperations, R1 ("…shall analyze its SPS operations and maintain a record of all misoperations…") and PRC-022-1 – Under-Voltage Load Shedding Program Performance, R1 ("…shall analyze and document all UVLS operations and Misoperations.") which both have a VRF of Medium. A VRF of Medium does not inadvertently lower the current VRF of High in the former PRC-004-2.1a, Requirements R1 and R2, because this Requirement now provides a clear and concise single reliability activity whereas the former Requirement contained multiple activities and is ambiguous.
FERC VRF G4 Discussion	Guideline 4- Consistency with NERC Definitions of VRFs: Failure of another Composite Protection System owner to review its component(s) for Misoperation, upon notification, for each BES interrupting device operation caused by a Protection System operation or by manual intervention in response to a Protection System failure to operate could in the planning time frame, under emergency, abnormal, or restorative conditions anticipated by the preparations, directly and adversely affect the electrical state or capability of the bulk electric system, or the ability to effectively monitor, control, or restore the bulk electric system. Composite Protection System operations reviewed for proper operation by the other owner(s) is an important step in preventing the future severity of disturbances affecting a wider area, or potential equipment damage.

VRF and VSL Justifications – PRC-004-3, R3			
FERC VRF G5 Discussion	Guideline 5- Treatment of Requirements that Co-mingle More than One Obligation: This requirement does not co-mingle reliability objectives of differing risk; therefore, the assigned VRF of Medium is consistent.		
Proposed VSL			
Lower	**Moderate**	**High**	**Severe**
The responsible entity identified whether or not its Protection System component(s) caused a Misoperation in accordance with Requirement R3, but was less than or equal to 30 calendar days late.	The responsible entity identified whether or not its Protection System component(s) caused a Misoperation in accordance with Requirement R3, but was greater than 30 calendar days and less than or equal to 45 calendar days late.	The responsible entity identified whether or not its Protection System component(s) caused a Misoperation in accordance with Requirement R3, but was greater than 45 calendar days and less than or equal to 60 calendar days late.	The responsible entity identified whether or not its Protection System component(s) caused a Misoperation in accordance with Requirement R3, but was greater than 60 calendar days late. OR The responsible entity failed to identify whether or not a Misoperation of its Protection System component(s) occurred in accordance with Requirement R3.
NERC VSL Guidelines	Meets NERC's VSL Guidelines—There is an incremental aspect to the VSL for tardiness and a binary aspect for failure. The VSL is entity size-neutral because performance is event-driven and not by individual assets.		

VRF and VSL Justifications – PRC-004-3, R3	
FERC VSL G1 Violation Severity Level Assignments Should Not Have the Unintended Consequence of Lowering the Current Level of Compliance	This requirement replaces one of the three performance components of PRC-004-2a, R1 (DP) and R2 (GO & TO) for the notified Protection System owner. The three performance components (paraphrased) are "analyze Protection System Misoperations," "develop a Correction Action Plan," and "implement a Corrective Action Plan." The VSLs are based on the three components and not individually as presented in the proposed PRC-004-3 standard. A VSL does not lower the current level of compliance because the former VSL was comingled with the other activities. This VSLs appropriately assess the severity of the violation with the failure to perform investigative actions as Severe.
FERC VSL G2 Violation Severity Level Assignments Should Ensure Uniformity and Consistency in the Determination of Penalties Guideline 2a: The Single Violation Severity Level Assignment Category for "Binary" Requirements Is Not Consistent Guideline 2b: Violation Severity Level Assignments that Contain Ambiguous Language	Guideline 2a: This requirement is not binary; therefore, this criterion does not apply. Guideline 2b: This VSL does not use any ambiguous terminology, thereby supporting uniformity and consistency in the determination of similar penalties for similar violations.

VRF and VSL Justifications – PRC-004-3, R3	
FERC VSL G3 Violation Severity Level Assignment Should Be Consistent with the Corresponding Requirement	This VSL uses similar terminology to that used in the associated requirement, and is therefore consistent with this Requirement.
FERC VSL G4 Violation Severity Level Assignment Should Be Based on A Single Violation, Not on A Cumulative Number of Violations	The VSL is based on a single violation and not cumulative violations.

VRF and VSL Justifications – PRC-004-3, R4	
Proposed VRF	**Medium**
NERC VRF Discussion	A Violation Risk Factor of Medium is consistent with the NERC VRF Guidelines. Failure to identify the cause(s) of a Misoperation (if not determined in Requirements R1 or R3) could in the planning time frame, under emergency, abnormal, or restorative conditions anticipated by the preparations, directly and adversely affect the electrical state or capability of the bulk electric system, or the ability to effectively monitor, control, or restore the bulk electric system.

VRF and VSL Justifications – PRC-004-3, R4	
	An Unidentified cause(s) of a Misoperation could contribute to the severity of future disturbances affecting a wider area, or potential equipment damage.
FERC VRF G1 Discussion	Guideline 1- Consistency w/ Blackout Report: This requirement is consistent with Recommendation 8: Improve System Protection to Slow or Limit the Spread of Future Cascading Outages. The applicable entity must conduct investigative action(s) to determine the cause(s) of a Misoperation, if not determined during the course of a review as proposed in Requirements R1 and R3.
FERC VRF G2 Discussion	Guideline 2- Consistency within a Reliability Standard: This requirement has a single reliability activity associated with the reliability objective and no sub-Requirement(s) which allows a single VRF to be assigned; therefore no conflict(s) exist.
FERC VRF G3 Discussion	Guideline 3- Consistency among Reliability Standards: This requirement replaces one of the three performance components of PRC-004-2a, R1 (TO & DP) and R2 (GO), which have a VRF of High. The three performance components (paraphrased) are "analyze Protection System Misoperations," "develop a Correction Action Plan," and "implement a Corrective Action Plan." This Requirement R4, to perform at least one "investigative action" (similar to "analyze"), comports with Reliability Standards PRC-016-0.1 – Special Protection System Misoperations, R1 ("…shall analyze its SPS operations and maintain a record of all misoperations…") and PRC-022-1 – Under-Voltage Load Shedding Program Performance, R1 ("…shall analyze and document all UVLS operations and Misoperations.") which both have a VRF of Medium.

VRF and VSL Justifications – PRC-004-3, R4	
	A VRF of Medium is not inadvertently lowering the current VRF of High in the former PRC-004-2.1a, Requirements R1 or R3, because this Requirement now provides a clear and concise single reliability activity whereas the former Requirement contained multiple activities and is ambiguous. This VRF of Medium comports with the VRF assignment of Medium for PRC-004-3, Requirements R1 and R3, which will generally reveal the cause(s) of an identified Misoperation.
FERC VRF G4 Discussion	Guideline 4- Consistency with NERC Definitions of VRFs: Failure to identify the cause(s) of a Misoperation could in the planning time frame, under emergency, abnormal, or restorative conditions anticipated by the preparations, directly and adversely affect the electrical state or capability of the bulk electric system, or the ability to effectively monitor, control, or restore the bulk electric system. Unidentified causes of a Misoperation could contribute to the severity of future disturbances affecting a wider area, or potential equipment damage.
FERC VRF G5 Discussion	Guideline 5- Treatment of Requirements that Co-mingle More than One Obligation: This requirement does not co-mingle reliability objectives of differing risk; therefore, the assigned VRF of Medium is consistent.

VRF and VSL Justifications – PRC-004-3, R4			
Proposed VSL			
Lower	**Moderate**	**High**	**Severe**
The responsible entity performed at least one investigative action in accordance with Requirement R4, but was less than or equal to one calendar quarter late.	The responsible entity performed at least one investigative action in accordance with Requirement R4, but was greater than one calendar quarter and less than or equal to two calendar quarters late.	The responsible entity performed at least one investigative action in accordance with Requirement R4, but was greater than two calendar quarters and less than or equal to three calendar quarters late.	The responsible entity performed at least one investigative action in accordance with Requirement R4, but was more than three calendar quarters late. OR The responsible entity failed to perform investigative action(s) in accordance with Requirement R4.
NERC VSL Guidelines	Meets NERC's VSL Guidelines—There is an incremental aspect to the VSL for tardiness and a binary aspect for failure. The VSL is entity size-neutral because performance is event-driven and not by individual assets.		
FERC VSL G1 Violation Severity Level Assignments Should Not Have the Unintended Consequence of Lowering the Current Level of Compliance	This requirement replaces one of the three performance components of PRC-004-2a, R1 (TO & DP) and R2 (GO). The three performance components (paraphrased) are "analyze Protection System Misoperations," "develop a Correction Action Plan," and "implement a Corrective Action Plan." The VSLs are based on the three components and not individually as presented in the proposed PRC-004-3 standard.		

VRF and VSL Justifications – PRC-004-3, R4	
	This VSL does not lower the current level of compliance because the former VSL was comingled with the other activities. This VSLs appropriately assess the severity of the violation with the failure to perform investigative actions as Severe.
FERC VSL G2 Violation Severity Level Assignments Should Ensure Uniformity and Consistency in the Determination of Penalties Guideline 2a: The Single Violation Severity Level Assignment Category for "Binary" Requirements Is Not Consistent Guideline 2b: Violation Severity Level Assignments that Contain Ambiguous Language	Guideline 2a: This requirement is not binary; therefore, this criterion does not apply. Guideline 2b: This VSL does not use any ambiguous terminology, thereby supporting uniformity and consistency in the determination of similar penalties for similar violations.
FERC VSL G3 Violation Severity Level Assignment Should Be Consistent with the Corresponding Requirement	This VSL uses similar terminology to that used in the associated requirement, and is therefore consistent with this Requirement.

VRF and VSL Justifications – PRC-004-3, R4	
FERC VSL G4 Violation Severity Level Assignment Should Be Based on A Single Violation, Not on A Cumulative Number of Violations	The VSL is based on a single violation and not cumulative violations.

VRF and VSL Justifications – PRC-004-3, R5	
Proposed VRF	**Medium**
NERC VRF Discussion	A Violation Risk Factor of Medium is consistent with the NERC VRF Guidelines. Failure to develop a CAP for a Misoperation with an identified cause could in the planning time frame, under emergency, abnormal, or restorative conditions anticipated by the preparations, directly and adversely affect the electrical state or capability of the bulk electric system, or the ability to effectively monitor, control, or restore the bulk electric system. An unresolved cause of a Misoperation or failing to consider other locations with similar Protection System components could affect the electrical state or capability of the bulk electric system, or the ability to effectively monitor, control, or restore the bulk electric system.

VRF and VSL Justifications – PRC-004-3, R5	
FERC VRF G1 Discussion	Guideline 1- Consistency w/ Blackout Report: The blackout report and subsequent technical analysis resulted in entities performing corrective actions; however, there were no negative reliability outcomes concerning the development of a Corrective Action Plan (CAP) associated with Protection Systems.
FERC VRF G2 Discussion	Guideline 2- Consistency within a Reliability Standard: This requirement has a single reliability activity associated with the reliability objective and no sub-Requirement(s) which allows a single VRF to be assigned; therefore no conflict(s) exist.
FERC VRF G3 Discussion	Guideline 3- Consistency among Reliability Standards: This requirement replaces one of the three performance components of PRC-004-2a, R1 (TO & DP) and R2 (GO). The three performance components (paraphrased) are "analyze Protection System Misoperations," "develop a Correction Action Plan," and "implement a Corrective Action Plan" which have a VRF of High. This requirement is consistent with Reliability Standards PRC-016-0.1, R2 ("…shall take corrective actions to avoid future Misoperations"), PRC-022-1, R1.5 ("For any Misoperation, a Corrective Action Plan…"), FAC-003, R5 ("…Transmission Owner or applicable Generator Owner shall take corrective action to ensure continued vegetation management") all three of which have a VRF of Medium.
FERC VRF G4 Discussion	Guideline 4- Consistency with NERC Definitions of VRFs: Failure to develop a CAP for a Misoperation with an identified cause or failing to consider other locations with similar components could in the planning time frame, under emergency, abnormal, or restorative conditions anticipated by the preparations, directly and adversely affect the electrical state or capability of the bulk electric system, or the ability to effectively monitor, control, or restore the bulk electric system.

VRF and VSL Justifications – PRC-004-3, R5			
	An unresolved cause of a Misoperation could affect the electrical state or capability of the bulk electric system, or the ability to effectively monitor, control, or restore the bulk electric system if the same condition resulted in a future Misoperation.		
FERC VRF G5 Discussion	Guideline 5- Treatment of Requirements that Co-mingle More than One Obligation: This requirement does not co-mingle reliability objectives of differing risk; therefore, the assigned VRF of Medium is consistent.		
Proposed VSL			
Lower	**Moderate**	**High**	**Severe**
The responsible entity developed a CAP, or explained in a declaration in accordance with Requirement R5, but in more than 60 calendar days and less than or equal to 70 calendar days of first identifying a cause of the Misoperation. OR	The responsible entity developed a CAP, or explained in a declaration in accordance with Requirement R5, but in more than 70 calendar days and less than or equal to 80 calendar days of first identifying a cause of the Misoperation. OR	The responsible entity developed a CAP, or explained in a declaration in accordance with Requirement R5, but in more than 80 calendar days and less than or equal to 90 calendar days of first identifying a cause of the Misoperation. OR	The responsible entity developed a CAP, or explained in a declaration in accordance with Requirement R5, but in more than 90 calendar days of first identifying a cause of the Misoperation. OR The responsible entity failed to develop a CAP or explain in a declaration in accordance with Requirement R5. OR

VRF and VSL Justifications – PRC-004-3, R5			
The responsible entity developed an evaluation in accordance with Requirement R5, but in more than 60 calendar days and less than or equal to 70 calendar days of first identifying a cause of the Misoperation.	The responsible entity developed an evaluation in accordance with Requirement R5, but in more than 70 calendar days and less than or equal to 80 calendar days of first identifying a cause of the Misoperation.	The responsible entity developed an evaluation in accordance with Requirement R5, but in more than 80 calendar days and less than or equal to 90 calendar days of first identifying a cause of the Misoperation.	The responsible entity developed an evaluation in accordance with Requirement R5, but in more than 90 calendar days of first identifying a cause of the Misoperation. OR The responsible entity failed to develop an evaluation in accordance with Requirement R5.
NERC VSL Guidelines	Meets NERC's VSL Guidelines—There is an incremental aspect to the VSL for tardiness and a binary aspect for failure. Varying VSLs are provided for the omission of the evaluation when developing the Corrective Action Plan and for failure to develop the evaluation.		
FERC VSL G1 Violation Severity Level Assignments Should Not Have the Unintended Consequence of Lowering the Current Level of Compliance	This requirement replaces one of the three performance components of PRC-004-2a, R1 (TO & DP) and R2 (GO). The three performance components (paraphrased) are "analyze Protection System Misoperations," "develop a Correction Action Plan," and "implement a Corrective Action Plan" which have varying VSLs. This VSL does not lower the current level of compliance because the former VSL in PRC-004-2.1a was comingled with the other activities. This Requirement has a Severe VSL for failure to develop the CAP with the other VSLs being based on tardiness of the development.		

VRF and VSL Justifications – PRC-004-3, R5	
FERC VSL G2 Violation Severity Level Assignments Should Ensure Uniformity and Consistency in the Determination of Penalties Guideline 2a: The Single Violation Severity Level Assignment Category for "Binary" Requirements Is Not Consistent Guideline 2b: Violation Severity Level Assignments that Contain Ambiguous Language	Guideline 2a: This requirement is not binary; therefore, this criterion does not apply. Guideline 2b: This VSL does not use any ambiguous terminology, thereby supporting uniformity and consistency in the determination of similar penalties for similar violations.
FERC VSL G3 Violation Severity Level Assignment Should Be Consistent with the Corresponding Requirement	This VSL uses similar terminology to that used in the associated requirement, and is therefore consistent with this Requirement.
FERC VSL G4	The VSL is based on a single violation and not cumulative violations.

VRF and VSL Justifications – PRC-004-3, R5	
Violation Severity Level Assignment Should Be Based on A Single Violation, Not on A Cumulative Number of Violations	

VRF and VSL Justification – PRC-004-3, R6	
Proposed VRF	**Medium**
NERC VRF Discussion	A Violation Risk Factor of Medium is consistent with the NERC VRF Guidelines. Failure to implement a CAP for a Misoperation with an identified cause could in the planning time frame, under emergency, abnormal, or restorative conditions anticipated by the preparations, directly and adversely affect the electrical state or capability of the bulk electric system, or the ability to effectively monitor, control, or restore the bulk electric system. An uncorrected cause of a Misoperation as a result of not implementing a Corrective Action Plan, could affect the electrical state or capability of the bulk electric system, or the ability to effectively monitor, control, or restore the bulk electric system since the condition could occur again.

VRF and VSL Justification – PRC-004-3, R6	
FERC VRF G1 Discussion	Guideline 1- Consistency w/ Blackout Report: The blackout report and subsequent technical analysis resulted in entities performing corrective actions; however, there were no negative reliability outcomes concerning the implementation of a Corrective Action Plan (CAP) associated with Protection Systems.
FERC VRF G2 Discussion	Guideline 2- Consistency within a Reliability Standard: This requirement has a single reliability activity associated with the reliability objective and no sub-Requirement(s) which allows a single VRF to be assigned; therefore no conflict(s) exist.
FERC VRF G3 Discussion	Guideline 3- Consistency among Reliability Standards: This requirement replaces one of the three performance components of PRC-004-2.1a, R1 (TO & DP) and R2 (GO),which both have a VRF of High. The three performance components (paraphrased) are "analyze Protection System Misoperations," "develop a Correction Action Plan," and "implement a Corrective Action Plan". This requirement is consistent with Reliability Standards PRC-016-0.1, R2 ("…shall take corrective actions to avoid future misoperations.") and PRC-022-1, R1.5 ("For any Misoperation, a Corrective Action Plan…") which both have a VRF of Medium. The proposed VRF of Medium does not inadvertently lower the current VRF of High in the former PRC-004-2.1a, Requirements R1 and R2, because this Requirement now provides a clear and concise single reliability activity whereas the former Requirement contained multiple activities and is ambiguous.

VRF and VSL Justification – PRC-004-3, R6	
FERC VRF G4 Discussion	Guideline 4- Consistency with NERC Definitions of VRFs: Failure to implement a Corrective Action Plan for a Misoperation with an identified cause could in the planning time frame, under emergency, abnormal, or restorative conditions anticipated by the preparations, directly and adversely affect the electrical state or capability of the bulk electric system, or the ability to effectively monitor, control, or restore the bulk electric system. An uncorrected cause of a Misoperation could contribute to the severity of future disturbances affecting a wider area, or potential equipment damage.
FERC VRF G5 Discussion	Guideline 5- Treatment of Requirements that Co-mingle More than One Obligation: This requirement does not co-mingle reliability objectives of differing risk; therefore, the assigned VRF of Medium is consistent.

Proposed VSL			
Lower	**Moderate**	**High**	**Severe**
The responsible entity implemented, but failed to update a CAP, when actions or timetables changed, in accordance with Requirement R6.	N/A	N/A	The responsible entity failed to implement a CAP in accordance with Requirement R6.

VRF and VSL Justification – PRC-004-3, R6	
NERC VSL Guidelines	Meets NERC's VSL Guidelines—The VSLs cover aspects of this Requirement that are not equal in importance and performance.
FERC VSL G1 Violation Severity Level Assignments Should Not Have the Unintended Consequence of Lowering the Current Level of Compliance	Guideline 3- Consistency among Reliability Standards: This requirement replaces one of the three performance components of PRC-004-2a, R1 (TO & DP) and R2 (GO). The three performance components (paraphrased) are "analyze Protection System Misoperations," "develop a Correction Action Plan," and "implement a Corrective Action Plan." The VSLs are based on the three components and not individually as presented in the proposed PRC-004-3 standard. The proposed VSL does not lower the current level of compliance because the former VSL was comingled with the other activities. The proposed Requirement is a Severe VSL for failure to implement the CAP with the Lower VSL being based on the failure of updating the CAP when actions or timetables change which is administrative in nature.
FERC VSL G2 Violation Severity Level Assignments Should Ensure Uniformity and Consistency in the Determination of Penalties	Guideline 2a: This requirement is not binary; therefore, this criterion does not apply. Guideline 2b: The proposed VSL does not use any ambiguous terminology, thereby supporting uniformity and consistency in the determination of similar penalties for similar violations.

VRF and VSL Justification – PRC-004-3, R6	
Guideline 2a: The Single Violation Severity Level Assignment Category for "Binary" Requirements Is Not Consistent Guideline 2b: Violation Severity Level Assignments that Contain Ambiguous Language	
FERC VSL G3 Violation Severity Level Assignment Should Be Consistent with the Corresponding Requirement	The proposed VSL uses similar terminology to that used in the associated requirement, and is therefore consistent with this Requirement.
FERC VSL G4 Violation Severity Level Assignment Should Be Based on A Single Violation, Not on A Cumulative Number of Violations	The VSL is based on a single violation and not cumulative violations.

Table 1: Mapping PRC-022-1 to PRC-010-2		
Requirement in Approved PRC-022-1 Reliability Standard	**Translation to New Standard or Other Action**	**Proposed Language in PRC-010-2 or Comments**
R1. Each Transmission Operator, Load-Serving Entity, and Distribution Provider that operates a UVLS program to mitigate the risk of voltage collapse or voltage instability in the BES shall **analyze and document all UVLS operations and Misoperations**. The analysis shall include:* **R1.5** For any Misoperation, a Corrective Action Plan to avoid future Misoperations of a similar nature. *Sub-requirements R1.1 through R1.4 have been omitted because they were addressed in Project 2008-02 during development of PRC-010-1.	PRC-010-2 proposes Part 4.2 to provide additional clarity that UVLS equipment operations and Misoperations are addressed by Requirement R4 through the Planning Coordinator or Transmission Planner assessment. Part 4.1 was originally embedded in the main Requirement R4 of PRC-010-1 and is now shown as a new Part 4.1 now. Part 4.2 is being proposed to provide the necessary clarity that the assessment conducted following an event that resulted in a voltage excursion for which its UVLS Program was designed to operate must include UVLS Program equipment.	**R4.** Each Planning Coordinator or Transmission Planner shall, within 12 calendar months of an event that resulted in a voltage excursion for which its UVLS Program was designed to operate, perform an assessment to evaluate: **4.1.** whether its UVLS Program resolved the undervoltage issues associated with the event, and **(Proposed) 4.2.** the performance (i.e., operation and non-operation) of the UVLS Program equipment.

Table 1: Mapping PRC-022-1 to PRC-010-2		
Requirement in Approved PRC-022-1 Reliability Standard	**Translation to New Standard or Other Action**	**Proposed Language in PRC-010-2 or Comments**
	Part 4.2 requires the Planning Coordinator or Transmission Planner to assess the UVLS equipment performance and address any deficiencies in a Corrective Action Plan (CAP) as required by PRC-010-2, Requirement R5. The clause "in its UVLS Program" was removed to clarify the Corrective Action Plan is addressing components of the assessment, which is about the UVLS Program.	**R5.** Each Planning Coordinator or Transmission Planner that identifies deficiencies during an assessment performed in either Requirement R3 or R4 shall develop a Corrective Action Plan to address the deficiencies and subsequently provide the Corrective Action Plan, including an implementation schedule, to UVLS entities within three calendar months of completing the assessment. [Violation Risk Factor: Medium] [Time Horizon: Operations Planning]

Table 2: Mapping PRC-004-5		
Requirement in Approved PRC-022-1 Reliability Standard	**Translation to New Standard or Other Action**	**Proposed Language in PRC-004-5 or Comments**
R1. Each Transmission Operator, Load-Serving Entity, and Distribution Provider that operates a UVLS program to mitigate the risk of voltage collapse or voltage instability in the BES shall **analyze and document all UVLS operations and Misoperations**. The analysis shall include:* **R1.5** For any Misoperation, a Corrective Action Plan to avoid future Misoperations of a similar nature. *Sub-requirements R1.1 through R1.4 have been omitted because they were addressed in Project 2008-02 during development of PRC-010-1.	Applicability 4.2.3 addresses the clause "analyze and document all UVLS operations and Misoperations."	**4.2.3** Undervoltage load shedding (UVLS) that is intended to trip one or more BES Elements.

NERC
NORTH AMERICAN ELECTRIC RELIABILITY CORPORATION

Project 2008-02 Undervoltage Load Shedding (PRC-010-1)

VRF and VSL Justifications

This document provides the Undervoltage Load Shedding Standard Drafting Team's (drafting team's) justification for assignment of violation risk factors (VRFs) and violation severity levels (VSLs) for each requirement in PRC-010-1 – Undervoltage Load Shedding.

Each primary requirement is assigned a VRF and a set of one or more VSLs. These elements support the determination of an initial value range for the Base Penalty Amount regarding violations of requirements in FERC-approved Reliability Standards, as defined in the ERO Sanction Guidelines.

The drafting team applied the following NERC criteria and FERC Guidelines when proposing VRFs and VSLs for the requirements under this project:

NERC Criteria - Violation Risk Factors

High Risk Requirement

A requirement that, if violated, could directly cause or contribute to Bulk Electric System instability, separation, or a Cascading sequence of failures, or could place the Bulk Electric System at an unacceptable risk of instability, separation, or Cascading failures; or, a requirement in a planning time frame that, if violated, could, under Emergency, abnormal, or restorative conditions anticipated by the preparations, directly cause or contribute to Bulk Electric System instability, separation, or a Cascading sequence of failures, place the Bulk Electric System at an unacceptable risk of instability, separation, or Cascading failures, or hinder restoration to a normal condition.

Medium Risk Requirement

A requirement that, if violated, could directly affect the electrical state or the capability of the Bulk Electric System or the ability to effectively monitor and control the Bulk Electric System. However, violation of a medium risk requirement is unlikely to lead to Bulk Electric System instability, separation, or Cascading failures; or, a requirement in a planning time frame that, if violated, could, under Emergency, abnormal, or restorative conditions anticipated by the preparations, directly and adversely affect the electrical state or capability of the Bulk Electric System or the ability to effectively monitor, control, or restore the Bulk Electric System. However, violation of a medium risk requirement is unlikely, under Emergency, abnormal, or restoration conditions anticipated by the preparations, to lead to Bulk Electric System instability, separation, or Cascading failures nor to hinder restoration to a normal condition.

Lower Risk Requirement

A requirement that is administrative in nature and a requirement that, if violated, would not be expected to adversely affect the electrical state or capability of the Bulk Electric System or the ability to effectively monitor and control the Bulk Electric System; or, a requirement that is administrative in nature and a requirement in a planning time frame that, if violated, would not, under the Emergency, abnormal, or

restorative conditions anticipated by the preparations, be expected to adversely affect the electrical state or capability of the Bulk Electric System or the ability to effectively monitor, control, or restore the Bulk Electric System. A planning requirement that is administrative in nature.

FERC Violation Risk Factor Guidelines

Guideline (1) — Consistency with the Conclusions of the Final Blackout Report

The Commission seeks to ensure that Violation Risk Factors assigned to requirements of reliability standards in these identified areas appropriately reflect their historical critical impact on the reliability of the Bulk Power System.

In the VSL Order, FERC listed critical areas (from the Final Blackout Report) where violations could severely affect the reliability of the Bulk-Power System:

- Emergency operations
- Vegetation management
- Operator personnel training
- Protection systems and their coordination
- Operating tools and backup facilities
- Reactive power and voltage control
- System modeling and data exchange
- Communication protocol and facilities
- Requirements to determine equipment ratings
- Synchronized data recorders
- Clearer criteria for operationally critical facilities
- Appropriate use of transmission loading relief

Guideline (2) — Consistency within a Reliability Standard

The Commission expects a rational connection between the sub-Requirement Violation Risk Factor assignments and the main Requirement Violation Risk Factor assignment.

Guideline (3) — Consistency among Reliability Standards

The Commission expects the assignment of Violation Risk Factors corresponding to Requirements that address similar reliability goals in different Reliability Standards would be treated comparably.

Guideline (4) — Consistency with NERC's Definition of the Violation Risk Factor Level

Guideline (4) was developed to evaluate whether the assignment of a particular Violation Risk Factor level conforms to NERC's definition of that risk level.

Guideline (5) — Treatment of Requirements that Co-mingle More Than One Obligation

Where a single Requirement co-mingles a higher risk reliability objective and a lesser risk reliability objective, the VRF assignment for such requirements must not be watered down to reflect the lower risk level associated with the less important objective of the reliability standard.

The following discussion addresses how the drafting team considered FERC's VRF Guidelines 2 through 5. The team did not address Guideline 1 directly because of an apparent conflict between Guidelines 1 and 4. Whereas Guideline 1 identifies a list of topics that encompass nearly all topics within NERC's Reliability Standards and implies that these requirements should be assigned a "High" VRF, Guideline 4 directs assignment of VRFs based on the impact of a specific requirement to the reliability of the system. The drafting team believes that Guideline 4 is reflective of the intent of VRFs in the first instance and, therefore, concentrated its approach on the reliability impact of the requirements.

PRC-010-1 – Undervoltage Load Shedding is a standard revision with the stated purpose: *To establish an integrated and coordinated approach to the design, evaluation, and reliable operation of Undervoltage Load Shedding Programs.* FERC Order No. 693 requested that PRC-010-0 be modified to require that an integrated and coordinated approach be included in all protection systems on the Bulk-Power System, including generators and transmission lines, generators' low voltage ride-through capabilities, and underfrequency loading shedding (UFLS) and undervoltage load shedding (UVLS) programs. PRC-010-1 addresses this directive in addition to consolidating and revising PRC-010-0 – Assessment of the Design and Effectiveness of UVLS Program with three (3) other existing UVLS standards: PRC-020-1 – Under-Voltage Load Shedding Program Database, PRC-021-1 – Under-Voltage Load Shedding Program Data, and PRC-022-1 – Under-Voltage Load Shedding Program Performance.

PRC-010-1 has eight (8) requirements that incorporate and enhance the intent of the requirements of PRC-010-0, PRC-020-1, PRC-021-1, and PRC-022-1. The revised standard requires that entities developing an Undervoltage Load Shedding Program (UVLS Program) evaluate the program's effectiveness prior to providing the program specifications and schedule to applicable entities. Applicable entities are then required to adhere to the UVLS Program specifications and implementation schedule, including those specifications and schedules associated with Corrective Action Plans (CAPs) for existing programs. The standard also requires an assessment of a UVLS Program at least once every 60 months, and an assessment to evaluate program performance within 12 months of an applicable event. If program deficiencies are identified as a result of either of these assessments, entities are required to develop and provide a CAP to applicable entities within three (3) months. In addition, there are requirements to update, provide data for, and share a UVLS Program database containing information necessary to model the program for use in event analyses and assessments.

The requirements of PRC-010-1 do not map, one-to-one, with the requirements of the legacy standards. The new requirements comingle various reliability attributes of the legacy standards with new reliability objectives, thus a requirement-to-requirement comparison of VRFs is not always possible. In developing the new VRFs for the requirements of PRC-010-1, the drafting team carefully considered the NERC criteria for developing VRFs, as well as the FERC VRF guidelines. The VRFs of FERC-approved PRC-006-1 – Automatic Underfrequency Load Shedding influenced the drafting team's VRF decisions (citing FERC VRF Guideline 3), as the drafting team used PRC-006-1 as a model with respect to PRC-010-1's language and construct.

NERC Criteria - Violation Severity Levels

VSLs define the degree to which compliance with a requirement was not achieved. Each requirement must have at least one VSL. While it is preferable to have four VSLs for each requirement, some requirements do not have multiple "degrees" of noncompliant performance, and may have only one, two, or three VSLs.

VSLs should be based on the guidelines shown in the table below:

Lower	Moderate	High	Severe
Missing a minor element (or a small percentage) of the required performance. The performance or product measured has significant value as it almost meets the full intent of the requirement.	Missing at least one significant element (or moderate percentage) of the required performance. The performance or product measured still has significant value in meeting the intent of the requirement.	Missing more than one significant element (or missing a high percentage) of the required performance or is missing a single vital component. The performance or product has limited value in meeting the intent of the requirement.	Missing most or all of the significant elements (or a significant percentage) of the required performance. The performance measured does not meet the intent of the requirement or the product delivered cannot be used in meeting the intent of the requirement.

FERC Order on Violation Severity Levels

In its June 19, 2008 Order on Violation Severity Levels, FERC indicated it would use the following four guidelines for determining whether to approve VSLs:

Guideline 1: Violation Severity Level Assignments Should Not Have the Unintended Consequence of Lowering the Current Level of Compliance

Compare the VSLs to any prior Levels of Non-compliance and avoid significant changes that may encourage a lower level of compliance than was required when Levels of Non-compliance were used.

Guideline 2: Violation Severity Level Assignments Should Ensure Uniformity and Consistency in the Determination of Penalties

Guideline 2a: A violation of a “binary” type requirement must be a “Severe” VSL.

Guideline 2b: Do not use ambiguous terms such as “minor” and “significant” to describe noncompliant performance.

Guideline 3: Violation Severity Level Assignment Should Be Consistent with the Corresponding Requirement

VSLs should not expand on what is required in the requirement.

Guideline 4: Violation Severity Level Assignment Should Be Based on a Single Violation, Not on a Cumulative Number of Violations

. . . unless otherwise stated in the requirement, each instance of non-compliance with a requirement is a separate violation. Section 4 of the Sanction Guidelines states that assessing penalties on a per violation per day basis is the “default” for penalty calculations.

VRF and VSL Justifications – PRC-010-1 Requirement R1	
Proposed VRF	High
NERC VRF Discussion	PRC-010-1 Requirement R1 meets the NERC criterion for a High VRF. Failure to evaluate a UVLS Program to show that it resolves the undervoltage issue it was designed for, and that it is coordinated with generator voltage ride-through capabilities and other protection and control systems, could lead to implementation of an ineffective or counterproductive program. In addition, failure to subsequently provide the UVLS Program specifications and implementation schedule to applicable entities would negate proper program implementation. Both these implications could, under anticipated Emergency, abnormal, or restorative conditions, directly contribute to Bulk Electric System (BES) instability, separation, or Cascading failures.
FERC VRF G1 Discussion	**Guideline 1: Consistency w/ Blackout Report** N/A
FERC VRF G2 Discussion	**Guideline 2: Consistency within a Reliability Standard** PRC-010-1 Requirement R1 has parts that all support the reliability objective so only one VRF was assigned; therefore no conflict(s) exist.
FERC VRF G3 Discussion	**Guideline 3: Consistency among Reliability Standards** PRC-010-1 Requirement R1 is similar to EOP-003-2, Requirements R3, R4, and R7, which have approved VRFs of High.
FERC VRF G4 Discussion	**Guideline 4: Consistency with NERC Definitions of VRFs** PRC-010-1 Requirement R1 meets the NERC criterion for a High VRF. Failure to evaluate a UVLS Program to show that it resolves the undervoltage issue it was designed for, and that it is coordinated with generator voltage ride-through capabilities and other protection and control systems, could lead to implementation of an ineffective or counterproductive program. In addition, failure to subsequently provide the UVLS Program specifications and implementation schedule to applicable entities would negate proper program implementation. Both these implications could, under anticipated Emergency, abnormal, or restorative conditions, directly contribute to BES instability, separation, or Cascading failures.
FERC VRF G5 Discussion	**Guideline 5: Treatment of Requirements that Co-mingle More than One Obligation** The obligations in PRC-010-1 Requirement R1, which are to evaluate the effectiveness of a UVLS Program according to the criteria specified in the two parts and subsequently provide the program specifications and implementation schedule to applicable entities, are all equally critical elements that failure to meet could, under anticipated Emergency, abnormal, or restorative conditions, directly contribute to BES instability, separation, or

VRF and VSL Justifications – PRC-010-1 Requirement R1	
	Cascading failures. Therefore, the assigned VRF of High is consistent throughout the requirement.
Proposed Lower VSL	N/A
Proposed Moderate VSL	N/A
Proposed High VSL	N/A
Proposed Severe VSL	The applicable entity that developed the UVLS Program failed to evaluate the program's effectiveness and subsequently provide the UVLS Program's specifications and implementation schedule to UVLS entities in accordance with Requirement R1, including the items specified in parts 1.1 and 1.2.
NERC VSL Guidelines Discussion	The proposed VSL for PRC-010-1 Requirement R1 meets NERC's VSL Guidelines in that there is a binary aspect for failure; the VSL addresses the degrees of compliance with respect to equal importance of the two parts.
FERC VSL G1 Discussion	**Guideline 1: Violation Severity Level Assignments Should Not Have the Unintended Consequence of Lowering the Current Level of Compliance** The basis for the current level of compliance in relation to PRC-010-1 Requirement R1 is EOP-003-2 Requirements R3, R4, and R7, as these requirements are being retired because they map to PRC-010-1 Requirement R1. Since the VSL for PRC-010-1 Requirement R1 is binary, the current level of compliance is met or exceeded when compared to the VSLs for EOP-003-2 Requirements R3, R4, and R7.
FERC VSL G2 Discussion	**Guideline 2: Violation Severity Level Assignments Should Ensure Uniformity and Consistency in the Determination of Penalties** **Guideline 2a: The Single Violation Severity Level Assignment Category for "Binary" Requirements Is Not Consistent** The proposed VSL for PRC-010-1 Requirement R1 is binary and is consistent with the guideline in that it is classified as a severe VSL. **Guideline 2b: Violation Severity Level Assignments that Contain Ambiguous Language** The proposed VSL for PRC-010-1 Requirement R1 uses the term "effectiveness" from the associated requirement, which could be considered ambiguous terminology; however, Requirement R1 does qualify the term "effectiveness" by indicating that the applicable entity must include what is listed in the requirement's parts in its evaluation of effectiveness. The VSL subsequently notes that the items specified in the parts must be included. This thereby supports uniformity and consistency in the determination of similar penalties for similar violations.

VRF and VSL Justifications – PRC-010-1 Requirement R1	
FERC VSL G3	**Guideline 3: Violation Severity Level Assignment Should Be Consistent with the Corresponding Requirement** The proposed VSL for PRC-010-1 Requirement R1 uses similar terminology to that used in the requirement and is therefore consistent with the requirement.
FERC VSL G4	**Guideline 4: Violation Severity Level Assignment Should Be Based on A Single Violation, Not on A Cumulative Number of Violations** The proposed VSL for PRC-010-1 Requirement R1 is based on a single violation and not cumulative violations.

VRF and VSL Justifications – PRC-010-1 Requirement R2	
Proposed VRF	High
NERC VRF Discussion	PRC-010-1 Requirement R2 meets the NERC criterion for a High VRF. Failure to implement a UVLS Program by adhering to the program specifications and implementation schedule increases the risk that the program will not perform properly. Under anticipated Emergency, abnormal, or restorative conditions, this could directly contribute to BES instability, separation, or Cascading failures.
FERC VRF G1 Discussion	**Guideline 1: Consistency w/ Blackout Report** N/A
FERC VRF G2 Discussion	**Guideline 2: Consistency within a Reliability Standard** PRC-010-1 Requirement R2 has no parts so only one VRF was assigned.
FERC VRF G3 Discussion	**Guideline 3: Consistency among Reliability Standards** PRC-010-1 Requirement R2 is similar to PRC-006-1 Requirement R9 and EOP-003-2 Requirement R5, which have approved VRFs of High.
FERC VRF G4 Discussion	**Guideline 4: Consistency with NERC Definitions of VRFs** PRC-010-1 Requirement R2 meets the NERC criterion for a High VRF. Failure to implement a UVLS Program by adhering to the program specifications and implementation schedule increases the risk that the program will not perform properly. Under anticipated Emergency, abnormal, or restorative conditions, this could directly contribute to BES instability, separation, or Cascading failures.
FERC VRF G5 Discussion	**Guideline 5: Treatment of Requirements that Co-mingle More than One Obligation** The obligations required in PRC-010-1 Requirement R2 are to adhere to the UVLS Program specifications and implementation schedule associated with program development (per Requirement R1) and corrective action (per Requirement R5). The requirement to develop a CAP in Requirement R5 is assigned a Medium VRF; therefore, execution of the corrective actions required by Requirement R2 has a commensurate VRF of Medium. However, since the obligations related to the development of a UVLS Program in Requirement R1 are assigned a High VRF, the failure to implement the program per Requirement R2 could, under anticipated Emergency, abnormal, or restorative conditions, directly contribute to BES instability, separation, or Cascading failures. Therefore, Requirement R2 is assigned a High VRF to reflect the higher risk level associated with the more critical objective.
Proposed Lower VSL	N/A

VRF and VSL Justifications – PRC-010-1 Requirement R2	
Proposed Moderate VSL	N/A
Proposed High VSL	The applicable entity failed to adhere to the UVLS Program specifications in accordance with Requirement R2. OR The applicable entity failed to adhere to the implementation schedule in accordance with Requirement R2.
Proposed Severe VSL	The applicable entity failed to adhere to the UVLS Program specifications and implementation schedule in accordance with Requirement R2.
NERC VSL Guidelines Discussion	PRC-010-1 Requirement R2 meets NERC's VSL Guidelines in that the VSLs cover aspects of the requirement that are equal in importance.
FERC VSL G1 Discussion	**Guideline 1: Violation Severity Level Assignments Should Not Have the Unintended Consequence of Lowering the Current Level of Compliance** PRC-010-1 Requirement R2 is a new requirement; therefore, there is no prior level of compliance.
FERC VSL G2 Discussion	**Guideline 2: Violation Severity Level Assignments Should Ensure Uniformity and Consistency in the Determination of Penalties** **Guideline 2a: The Single Violation Severity Level Assignment Category for "Binary" Requirements Is Not Consistent** N/A **Guideline 2b: Violation Severity Level Assignments that Contain Ambiguous Language** The proposed VSLs for PRC-010-1 Requirement R2 do not use any ambiguous terminology, thereby supporting uniformity and consistency in the determination of similar penalties for similar violations.
FERC VSL G3	**Guideline 3: Violation Severity Level Assignment Should Be Consistent with the Corresponding Requirement** The proposed VSLs for PRC-010-1 Requirement R2 use similar terminology to that used in the requirement and are therefore consistent with the requirement.
FERC VSL G4	**Guideline 4: Violation Severity Level Assignment Should Be Based on A Single Violation, Not on A Cumulative Number of Violations** The proposed VSLs for PRC-010-1 Requirement R2 are based on a single violation and not cumulative violations.

VRF and VSL Justifications – PRC-010-1 Requirement R3	
Proposed VRF	Medium
NERC VRF Discussion	PRC-010-1 Requirement R3 meets NERC's criterion for a Medium VRF. Failure to perform a comprehensive assessment to evaluate the effectiveness of a UVLS Program at least once every 60 calendar months could lead to failure to identify and address a necessary program modification, which could, under anticipated Emergency, abnormal, or restorative conditions, directly and adversely affect the electrical state or the capability of the BES, or the ability to effectively monitor and control the BES. However, while the performance that must be met when initially developing a UVLS Program is assigned a High VRF in Requirement R1 due to the likely implications of developing and subsequently implementing an ineffective or counterproductive program if the criteria is not met, it is less likely that failure to do a periodic comprehensive assessment of the program, which supplements the annual Transmission Planning (TPL) assessment required by NERC Reliability Standards, would have implications on the BES. Therefore, a violation of Requirement R3 is unlikely to lead to BES instability, separation, or Cascading failures. The applicable entities are always responsible for maintaining the reliability of the BES regardless of the situation.
FERC VRF G1 Discussion	**Guideline 1: Consistency w/ Blackout Report** N/A
FERC VRF G2 Discussion	**Guideline 2: Consistency within a Reliability Standard** PRC-010-1 Requirement R3 has parts that all support the reliability objective so only one VRF was assigned; therefore no conflict(s) exist.
FERC VRF G3 Discussion	**Guideline 3: Consistency among Reliability Standards** PRC-010-1 Requirement R3 is consistent with the current requirement it is replacing (PRC-010-0 Requirement R1), which has an approved VRF of Medium. Similar performance exists in PRC-006-1 Requirement R4, which has an approved VRF of High. This discrepancy is justified due to the differing nature of the programs these standards are addressing, as PRC-006-1 addresses mandatory UFLS programs and PRC-010-1 covers optional UVLS Programs. A UFLS program inherently has a more likely overall impact on the BES.
FERC VRF G4 Discussion	**Guideline 4: Consistency with NERC Definitions of VRFs** PRC-010-1 Requirement R3 meets NERC's criterion for a Medium VRF. Failure to perform a comprehensive assessment to evaluate the effectiveness of a UVLS Program at least once every 60 calendar months could lead to failure to identify and address a necessary program modification, which could, under anticipated Emergency, abnormal, or restorative conditions, directly and

VRF and VSL Justifications – PRC-010-1 Requirement R3	
	adversely affect the electrical state or the capability of the BES, or the ability to effectively monitor and control the BES. However, while the performance that must be met when initially developing a UVLS Program is assigned a High VRF in Requirement R1 due to the likely implications of developing and subsequently implementing an ineffective or counterproductive program if the criteria is not met, it is less likely that failure to do a periodic comprehensive assessment of the program, which supplements the annual TPL assessment required by NERC Reliability Standards, would have implications on the BES. Therefore, a violation of Requirement R3 is unlikely to lead to BES instability, separation, or Cascading failures. The applicable entities are always responsible for maintaining the reliability of the BES regardless of the situation.
FERC VRF G5 Discussion	**Guideline 5: Treatment of Requirements that Co-mingle More than One Obligation** The obligation required in PRC-010-1 Requirement R3 is to periodically evaluate the effectiveness of a UVLS Program according to the criteria specified in the two parts; the parts are equally critical elements that failure to meet could, under anticipated Emergency, abnormal, or restorative conditions, directly contribute to BES instability, separation, or Cascading failures. However, violation of these commensurate elements is unlikely to lead to BES instability, separation, or Cascading failures. Therefore, the assigned VRF of Medium is consistent throughout the requirement.
Proposed Lower VSL	N/A
Proposed Moderate VSL	N/A
Proposed High VSL	N/A
Proposed Severe VSL	The applicable entity failed to perform an assessment at least once during the 60 calendar months in accordance with Requirement R3, including the items specified in parts 3.1 and 3.2.
NERC VSL Guidelines Discussion	PRC-010-1 Requirement R3 meets NERC's VSL Guidelines in that there is a binary aspect for failure; the VSL addresses the degrees of compliance with respect to equal importance of the two parts.
FERC VSL G1 Discussion	**Guideline 1: Violation Severity Level Assignments Should Not Have the Unintended Consequence of Lowering the Current Level of Compliance** The proposed VSL for PRC-010-1 Requirement R3 is consistent in nature with the VSL for the requirement it is replacing (PRC-010-0 Requirement R1) and therefore does not lower the current level of compliance.

VRF and VSL Justifications – PRC-010-1 Requirement R3	
FERC VSL G2 Discussion	**Guideline 2: Violation Severity Level Assignments Should Ensure Uniformity and Consistency in the Determination of Penalties** **Guideline 2a: The Single Violation Severity Level Assignment Category for "Binary" Requirements Is Not Consistent** The proposed VSL for PRC-010-1 Requirement R3 for this binary requirement is consistent with the guideline in that it is classified as a severe VSL. **Guideline 2b: Violation Severity Level Assignments that Contain Ambiguous Language** The proposed VSL for PRC-010-1 Requirement R3 does not use any ambiguous terminology, thereby supporting uniformity and consistency in the determination of similar penalties for similar violations.
FERC VSL G3	**Guideline 3: Violation Severity Level Assignment Should Be Consistent with the Corresponding Requirement** The proposed VSL for PRC-010-1 Requirement R3 uses similar terminology to that used in the requirement and is therefore consistent with the requirement.
FERC VSL G4	**Guideline 4: Violation Severity Level Assignment Should Be Based on A Single Violation, Not on A Cumulative Number of Violations** The proposed VSL for PRC-010-1 Requirement R3 is based on a single violation and not cumulative violations.

VRF and VSL Justifications – PRC-010-1 Requirement R4	
Proposed VRF	Medium
NERC VRF Discussion	PRC-010-1 Requirement R4 meets NERC's criterion for a Medium VRF. Failure to perform an assessment to evaluate whether the UVLS Program resolved the undervoltage issues associated with a qualifying event in a timely manner could lead to failure to identify and address a necessary program modification. This could, under anticipated Emergency, abnormal, or restorative conditions, directly affect the electrical state or the capability of the BES, or the ability to effectively monitor and control the BES. However, while the performance that must be met when initially developing a UVLS Program is assigned a High VRF in Requirement R1 due to the likely implications of developing and subsequently implementing an ineffective or counterproductive program if the criteria is not met, it is less likely that failure to perform an assessment to evaluate whether the UVLS Program resolved the undervoltage issues associated with a qualifying event would have implications on the BES, as these are infrequent and would be done in addition to the annual TPL assessment required by NERC Reliability Standards. Therefore, a violation of Requirement R4 is unlikely to lead to BES instability, separation, or Cascading failures. The applicable entities are always responsible for maintaining the reliability of the BES regardless of the situation.
FERC VRF G1 Discussion	**Guideline 1: Consistency w/ Blackout Report** N/A
FERC VRF G2 Discussion	**Guideline 2: Consistency within a Reliability Standard** PRC-010-1 Requirement R4 has no parts so only one VRF was assigned.
FERC VRF G3 Discussion	**Guideline 3: Consistency among Reliability Standards** PRC-010-1 Requirement R4 is similar to PRC-022-1 Requirement 1 and PRC-006-1 Requirement R11, which have approved VRFs of Medium.
FERC VRF G4 Discussion	**Guideline 4: Consistency with NERC Definitions of VRFs** PRC-010-1 Requirement R4 meets NERC's criterion for a Medium VRF. Failure to perform an assessment to evaluate whether the UVLS Program resolved the undervoltage issues associated with a qualifying event in a timely manner could lead to failure to identify and address a necessary program modification. This could, under anticipated Emergency, abnormal, or restorative conditions, directly affect the electrical state or the capability of the BES, or the ability to effectively monitor and control the BES. However, while the performance that must be met when initially developing a UVLS Program is assigned a High VRF in Requirement R1 due to the likely implications of developing and subsequently implementing an ineffective or

VRF and VSL Justifications – PRC-010-1 Requirement R4	
	counterproductive program if the criteria is not met, it is less likely that failure to perform an assessment to evaluate whether the UVLS Program resolved the undervoltage issues associated with a qualifying event would have implications on the BES, as these are infrequent and would be done in addition to the annual TPL assessment required by NERC Reliability Standards. Therefore, a violation of Requirement R4 is unlikely to lead to BES instability, separation, or Cascading failures. The applicable entities are always responsible for maintaining the reliability of the BES regardless of the situation.
FERC VRF G5 Discussion	**Guideline 5: Treatment of Requirements that Co-mingle More than One Obligation** PRC-010-1 Requirement R4 does not co-mingle reliability objectives of differing risk; the assigned VRF of Medium is consistent throughout the requirement.
Proposed Lower VSL	The applicable entity performed an assessment in accordance with Requirement R4 within a time period greater than 12 calendar months but less than or equal to 13 calendar months after an applicable event.
Proposed Moderate VSL	The applicable entity performed an assessment in accordance with Requirement R4 within a time period greater than 13 calendar months but less than or equal to 14 calendar months after an applicable event.
Proposed High VSL	The applicable entity performed an assessment in accordance with Requirement R4 within a time period greater than 14 calendar months but less than or equal to 15 calendar months after an applicable event.
Proposed Severe VSL	The applicable entity performed an assessment in accordance with Requirement R4 within a time period greater than 15 months after an applicable event. OR The applicable entity failed to perform an assessment in accordance with Requirement R4.
NERC VSL Guidelines Discussion	PRC-010-1 Requirement R4 meets NERC's VSL Guidelines in that there is an incremental aspect to the VSLs for tardiness and a binary aspect for failure.
FERC VSL G1 Discussion	**Guideline 1: Violation Severity Level Assignments Should Not Have the Unintended Consequence of Lowering the Current Level of Compliance** PRC-010-1 Requirement R4 is different in construct from the requirement it is replacing (PRC-022-1 Requirement R1) and, therefore, the VSLs cannot be compared. However, both sets of VSLs have incremental aspects and a binary aspect for failure.

VRF and VSL Justifications – PRC-010-1 Requirement R4	
FERC VSL G2 Discussion	**Guideline 2: Violation Severity Level Assignments Should Ensure Uniformity and Consistency in the Determination of Penalties** **Guideline 2a: The Single Violation Severity Level Assignment Category for "Binary" Requirements Is Not Consistent** N/A **Guideline 2b: Violation Severity Level Assignments that Contain Ambiguous Language** The proposed VSLs for PRC-010-1 Requirement R4 do not use any ambiguous terminology, thereby supporting uniformity and consistency in the determination of similar penalties for similar violations.
FERC VSL G3	**Guideline 3: Violation Severity Level Assignment Should Be Consistent with the Corresponding Requirement** The proposed VSLs for PRC-010-1 Requirement R4 use similar terminology to that used in the requirement and are therefore consistent with the requirement.
FERC VSL G4	**Guideline 4: Violation Severity Level Assignment Should Be Based on A Single Violation, Not on A Cumulative Number of Violations** The proposed VSLs for PRC-010-1 Requirement R4 are based on a single violation and not cumulative violations.

VRF and VSL Justifications – PRC-010-1 Requirement R5	
Proposed VRF	Medium
NERC VRF Discussion	PRC-010-1 Requirement R5 meets NERC's criterion for a Medium VRF. Failure to develop and subsequently provide a CAP to address the deficiencies identified as a result of a UVLS Program assessment in a timely manner could lead to failure to address a necessary program modification, which could, under anticipated Emergency, abnormal, or restorative conditions, directly affect the electrical state or the capability of the BES, or the ability to effectively monitor and control the BES. However, since the development of a CAP in Requirement R5 is dependent on the outcomes of Requirement R3 or R4, the likelihood of implications on the BES is commensurate with those of Requirements R3 and R4, which are assigned Medium VRFs. Therefore, a violation of Requirement R5 is unlikely to lead to BES instability, separation, or Cascading failures. The applicable entities are always responsible for maintaining the reliability of the BES regardless of the situation.
FERC VRF G1 Discussion	**Guideline 1: Consistency w/ Blackout Report** N/A
FERC VRF G2 Discussion	**Guideline 2: Consistency within a Reliability Standard** PRC-010-1 Requirement R5 has no parts so only one VRF was assigned.
FERC VRF G3 Discussion	**Guideline 3: Consistency among Reliability Standards** PRC-010-1 Requirement R5 is similar to PRC-022-1 Requirement R1.5, which has an approved VRF of Medium.
FERC VRF G4 Discussion	**Guideline 4: Consistency with NERC Definitions of VRFs** PRC-010-1 Requirement R5 meets NERC's criterion for a Medium VRF. Failure to develop and subsequently provide a CAP to address the deficiencies identified as a result of a UVLS Program assessment in a timely manner could lead to failure to address a necessary program modification, which could, under anticipated Emergency, abnormal, or restorative conditions, directly affect the electrical state or the capability of the BES, or the ability to effectively monitor and control the BES. However, since the development of a CAP in Requirement R5 is dependent on the outcomes of Requirement R3 or R4, the likelihood of implications on the BES is commensurate with those of Requirements R3 and R4, which are assigned Medium VRFs. Therefore, a violation of Requirement R5 is unlikely to lead to BES instability, separation, or Cascading failures. The applicable entities are always responsible for maintaining the reliability of the BES regardless of the situation.

VRF and VSL Justifications – PRC-010-1 Requirement R5	
FERC VRF G5 Discussion	**Guideline 5: Treatment of Requirements that Co-mingle More than One Obligation** PRC-010-1 Requirement R5 does not co-mingle reliability objectives of differing risk; the assigned VRF of Medium is consistent throughout the requirement.
Proposed Lower VSL	The applicable entity developed a Corrective Action Plan and provided it to UVLS entities in accordance with Requirement R5 but was late by less than or equal to 15 calendar days.
Proposed Moderate VSL	The applicable entity developed a Corrective Action Plan and provided it to UVLS entities in accordance with Requirement R5 but was late by more than 15 calendar days but less than or equal to 30 calendar days.
Proposed High VSL	The applicable entity developed a Corrective Action Plan and provided it to UVLS entities in accordance with Requirement R5 but was late by more than 30 calendar days but less than or equal to 45 calendar days.
Proposed Severe VSL	The applicable entity developed a Corrective Action Plan and provided it to UVLS entities in accordance with Requirement R5 but was late by more than 45 calendar days. OR The responsible entity failed to develop a Corrective Action Plan or provide it to UVLS entities in accordance with Requirement R5.
NERC VSL Guidelines Discussion	PRC-010-1 Requirement R5 meets NERC's VSL Guidelines in that there is an incremental aspect to the VSLs for tardiness and a binary aspect for failure.
FERC VSL G1 Discussion	**Guideline 1: Violation Severity Level Assignments Should Not Have the Unintended Consequence of Lowering the Current Level of Compliance** PRC-010-1 Requirement R5 is different in construct from the requirement it is replacing (PRC-022-1 Requirement R1) and, therefore, the VSLs cannot be compared. However, both sets of VSLs have incremental aspects and a binary aspect for failure.
FERC VSL G2 Discussion	**Guideline 2: Violation Severity Level Assignments Should Ensure Uniformity and Consistency in the Determination of Penalties** **Guideline 2a: The Single Violation Severity Level Assignment Category for "Binary" Requirements Is Not Consistent** N/A **Guideline 2b: Violation Severity Level Assignments that Contain Ambiguous Language** The proposed VSLs for PRC-010-1 Requirement R5 do not use any ambiguous terminology, thereby supporting uniformity and consistency in the determination of similar penalties for similar violations.

VRF and VSL Justifications – PRC-010-1 Requirement R5	
FERC VSL G3	**Guideline 3: Violation Severity Level Assignment Should Be Consistent with the Corresponding Requirement** The proposed VSLs for PRC-010-1 Requirement R5 use similar terminology to that used in the requirement and are therefore consistent with the requirement.
FERC VSL G4	**Guideline 4: Violation Severity Level Assignment Should Be Based on A Single Violation, Not on A Cumulative Number of Violations** The proposed VSLs for PRC-010-1 Requirement R5 are based on a single violation and not cumulative violations.

VRF and VSL Justifications – PRC-010-1 Requirement R6	
Proposed VRF	Lower
NERC VRF Discussion	PRC-010-1 Requirement R6 meets NERC's criterion for a Lower VRF. Though having a current UVLS Program database is necessary to properly inform accurate undervoltage studies and event analyses, this is a planning requirement that is administrative in nature; failure to annually update a UVLS Program database would not, under the anticipated Emergency, abnormal, or restorative conditions, be expected to adversely affect the electrical state or capability of the BES, or the ability to effectively monitor, control, or restore the BES. The applicable entities are always responsible for maintaining the reliability of the BES regardless of the situation.
FERC VRF G1 Discussion	**Guideline 1: Consistency w/ Blackout Report** N/A
FERC VRF G2 Discussion	**Guideline 2: Consistency within a Reliability Standard** The requirement has no parts so only one VRF was assigned.
FERC VRF G3 Discussion	**Guideline 3: Consistency among Reliability Standards** PRC-010-1 Requirement R6 similar to PRC-006-1 Requirement R6, which has an approved VRF of Lower.
FERC VRF G4 Discussion	**Guideline 4: Consistency with NERC Definitions of VRFs** PRC-010-1 Requirement R6 meets NERC's criterion for a Lower VRF. Though having a current UVLS Program database is necessary to properly inform accurate undervoltage studies and event analyses, this is a planning requirement that is administrative in nature; failure to annually update a UVLS Program database would not, under the anticipated Emergency, abnormal, or restorative conditions, be expected to adversely affect the electrical state or capability of the BES, or the ability to effectively monitor, control, or restore the BES. The applicable entities are always responsible for maintaining the reliability of the BES regardless of the situation.
FERC VRF G5 Discussion	**Guideline 5: Treatment of Requirements that Co-mingle More than One Obligation** PRC-010-1 Requirement R6 does not co-mingle reliability objectives of differing risk; the assigned VRF of Lower is consistent throughout the requirement.
Proposed Lower VSL	The applicable entity updated the database in accordance with Requirement R6 but was late by less than or equal to 30 calendar days.
Proposed Moderate VSL	The applicable entity updated the database in accordance with Requirement R6 but was late by less than or equal to 30 calendar days.
Proposed High VSL	The applicable entity updated the database in accordance with Requirement R6 but was late by more than 60 calendar days but less than or equal to 90

VRF and VSL Justifications – PRC-010-1 Requirement R6	
	calendar days.
Proposed Severe VSL	The applicable entity updated the database in accordance with Requirement R6 but was late by more than 90 calendar days. OR The applicable entity failed to update the database in accordance with Requirement R6.
NERC VSL Guidelines Discussion	PRC-010-1 Requirement R6 meets NERC's VSL Guidelines in that there is an incremental aspect to the VSLs for tardiness and a binary aspect for failure.
FERC VSL G1 Discussion	**Guideline 1: Violation Severity Level Assignments Should Not Have the Unintended Consequence of Lowering the Current Level of Compliance** PRC-010-1 Requirement R6 is replacing PRC-020-1 Requirement R1, which is applicable to the Regional Reliability Organization and has no associated VSLs. Therefore, there is no prior level of compliance.
FERC VSL G2 Discussion	**Guideline 2: Violation Severity Level Assignments Should Ensure Uniformity and Consistency in the Determination of Penalties** **Guideline 2a: The Single Violation Severity Level Assignment Category for "Binary" Requirements Is Not Consistent** N/A **Guideline 2b: Violation Severity Level Assignments that Contain Ambiguous Language** The proposed VSLs for PRC-010-1 Requirement R6 do not use any ambiguous terminology, thereby supporting uniformity and consistency in the determination of similar penalties for similar violations.
FERC VSL G3	**Guideline 3: Violation Severity Level Assignment Should Be Consistent with the Corresponding Requirement** The proposed VSLs for PRC-010-1 Requirement R6 use similar terminology to that used in the requirement and are therefore consistent with the requirement.
FERC VSL G4	**Guideline 4: Violation Severity Level Assignment Should Be Based on A Single Violation, Not on A Cumulative Number of Violations** The proposed VSLs for PRC-010-1 Requirement R6 are based on a single violation and not cumulative violations.

VRF and VSL Justifications – PRC-010-1 Requirement R7	
Proposed VRF	Lower
NERC VRF Discussion	PRC-010-1 Requirement R7 meets NERC's criterion for a Lower VRF. Though providing current and formatted data is necessary to properly support a UVLS Program database, which subsequently informs accurate undervoltage studies and event analyses, this is a planning requirement that is administrative in nature; failure to provide the data according to the format and schedule specified would not, under the anticipated Emergency, abnormal, or restorative conditions, be expected to adversely affect the electrical state or capability of the BES, or the ability to effectively monitor, control, or restore the BES. The applicable entities are always responsible for maintaining the reliability of the BES regardless of the situation.
FERC VRF G1 Discussion	**Guideline 1: Consistency w/ Blackout Report** N/A
FERC VRF G2 Discussion	**Guideline 2: Consistency within a Reliability Standard** PRC-010-1 Requirement R7 has no parts so only one VRF was assigned.
FERC VRF G3 Discussion	**Guideline 3 Consistency among Reliability Standards:** PRC-010-1 Requirement R7 is similar to PRC-006-1 Requirement R8, which has an approved VRF of Lower.
FERC VRF G4 Discussion	**Guideline 4: Consistency with NERC Definitions of VRFs** PRC-010-1 Requirement R7 meets NERC's criterion for a Lower VRF. Though providing current and formatted data is necessary to properly support a UVLS Program database, which subsequently informs accurate undervoltage studies and event analyses, this is a planning requirement that is administrative in nature; failure to provide the data according to the format and schedule specified would not, under the anticipated Emergency, abnormal, or restorative conditions, be expected to adversely affect the electrical state or capability of the BES, or the ability to effectively monitor, control, or restore the BES. The applicable entities are always responsible for maintaining the reliability of the BES regardless of the situation.
FERC VRF G5 Discussion	**Guideline 5: Treatment of Requirements that Co-mingle More than One Obligation** PRC-010-1 Requirement R7 does not co-mingle reliability objectives of differing risk; the assigned VRF of Lower is consistent throughout the requirement.
Proposed Lower VSL	The applicable entity provided data in accordance with Requirement R7 but was late by less than or equal to 30 calendar days per the specified schedule. OR

VRF and VSL Justifications – PRC-010-1 Requirement R7	
	The applicable entity provided data in accordance with Requirement R7 but the data was not provided according to the specified format.
Proposed Moderate VSL	The applicable entity provided data in accordance with Requirement R7 but was late by more than 30 calendar days but less than or equal to 60 calendar days per the specified schedule.
Proposed High VSL	The applicable entity provided data in accordance with Requirement R7 but was late by more than 60 calendar days but less than or equal to 90 calendar days per the specified schedule.
Proposed Severe VSL	The applicable entity provided data in accordance with Requirement R7 but was late by more than 90 calendar days per the specified schedule. OR The applicable entity failed to provide data in accordance with Requirement R7.
NERC VSL Guidelines Discussion	PRC-010-1 Requirement R7 meets NERC's VSL Guidelines in that the VSLs cover aspects of the requirement that are not equal in importance; there is an incremental aspect to the VSLs for tardiness and a binary aspect for failure.
FERC VSL G1 Discussion	**Guideline 1: Violation Severity Level Assignments Should Not Have the Unintended Consequence of Lowering the Current Level of Compliance** PRC-010-1 Requirement R7 is different in construct from the requirement it is replacing (PRC-021-1 Requirement R1) and, therefore, the VSLs cannot be compared. However, both sets of VSLs have incremental aspects and a binary aspect for failure.
FERC VSL G2 Discussion	**Guideline 2: Violation Severity Level Assignments Should Ensure Uniformity and Consistency in the Determination of Penalties** **Guideline 2a: The Single Violation Severity Level Assignment Category for "Binary" Requirements Is Not Consistent** N/A **Guideline 2b: Violation Severity Level Assignments that Contain Ambiguous Language** The proposed VSLs for PRC-010-1 Requirement R7 do not use any ambiguous terminology, thereby supporting uniformity and consistency in the determination of similar penalties for similar violations.
FERC VSL G3	**Guideline 3: Violation Severity Level Assignment Should Be Consistent with the Corresponding Requirement** The proposed VSLs for PRC-010-1 Requirement R7 use similar terminology to that used in the requirement and are therefore consistent with the requirement.

VRF and VSL Justifications – PRC-010-1 Requirement R7	
FERC VSL G4	**Guideline 4: Violation Severity Level Assignment Should Be Based on A Single Violation, Not on A Cumulative Number of Violations** The proposed VSLs for PRC-010-1 Requirement R7 are based on a single violation and not cumulative violations.

VRF and VSL Justifications – PRC-010-1 Requirement R8	
Proposed VRF	Lower
NERC VRF Discussion	PRC-010-1 Requirement R8 meets NERC's criterion for a Lower VRF. Though sharing a UVLS Program database with applicable entities in a timely manner supports an integrated and coordinated approach to UVLS programs, this is a planning requirement that is administrative in nature; failure to share the database within 30 calendar days of a request would not, under the anticipated Emergency, abnormal, or restorative conditions, be expected to adversely affect the electrical state or capability of the BES, or the ability to effectively monitor, control, or restore the BES. The applicable entities are always responsible for maintaining the reliability of the BES regardless of the situation.
FERC VRF G1 Discussion	**Guideline 1: Consistency w/ Blackout Report** N/A
FERC VRF G2 Discussion	**Guideline 2: Consistency within a Reliability Standard** The requirement has no parts so only one VRF was assigned.
FERC VRF G3 Discussion	**Guideline 3: Consistency among Reliability Standards** PRC-010-1 Requirement R8 is similar to PRC-006-1 Requirement R7, which has an approved VRF of Lower.
FERC VRF G4 Discussion	**Guideline 4: Consistency with NERC Definitions of VRFs** PRC-010-1 Requirement R8 meets NERC's criterion for a Lower VRF. Though sharing a UVLS Program database with applicable entities in a timely manner supports an integrated and coordinated approach to UVLS programs, this is a planning requirement that is administrative in nature; failure to share the database within 30 calendar days of a request would not, under the anticipated Emergency, abnormal, or restorative conditions, be expected to adversely affect the electrical state or capability of the BES, or the ability to effectively monitor, control, or restore the BES. The applicable entities are always responsible for maintaining the reliability of the BES regardless of the situation.
FERC VRF G5 Discussion	**Guideline 5: Treatment of Requirements that Co-mingle More than One Obligation** PRC-010-1 Requirement R8 does not co-mingle reliability objectives of differing risk; the assigned VRF of Lower is consistent throughout the requirement.
Proposed Lower VSL	The applicable entity provided its UVLS Program database in accordance with Requirement R8 but was late by less than or equal to 15 calendar days.
Proposed Moderate VSL	The applicable entity provided its UVLS Program database in accordance with Requirement R8 but was late by more than 15 calendar days but less than or equal to 30 calendar days.

VRF and VSL Justifications – PRC-010-1 Requirement R8	
Proposed High VSL	The applicable entity provided its UVLS Program database in accordance with Requirement R8 but was late by more than 30 calendar days but less than or equal to 45 calendar days.
Proposed Severe VSL	The applicable entity provided its UVLS Program database in accordance with Requirement R8 but was late by more than 45 calendar days. OR The applicable entity failed to provide its UVLS Program database in accordance with Requirement R8.
NERC VSL Guidelines Discussion	PRC-010-1 Requirement R8 meets NERC's VSL Guidelines in that there is an incremental aspect to the VSLs for tardiness and a binary aspect for failure.
FERC VSL G1 Discussion	**Guideline 1: Violation Severity Level Assignments Should Not Have the Unintended Consequence of Lowering the Current Level of Compliance** PRC-010-1 Requirement R8 is replacing PRC-020-1 Requirement R2, which is applicable to the Regional Reliability Organization and has no associated VSLs. Therefore, there is no prior level of compliance.
FERC VSL G2 Discussion	**Guideline 2: Violation Severity Level Assignments Should Ensure Uniformity and Consistency in the Determination of Penalties** **Guideline 2a: The Single Violation Severity Level Assignment Category for "Binary" Requirements Is Not Consistent** N/A **Guideline 2b: Violation Severity Level Assignments that Contain Ambiguous Language** The proposed VSLs for PRC-010-1 Requirement R8 do not use any ambiguous terminology, thereby supporting uniformity and consistency in the determination of similar penalties for similar violations.
FERC VSL G3	**Guideline 3: Violation Severity Level Assignment Should Be Consistent with the Corresponding Requirement** The proposed VSLs for PRC-010-1 Requirement R8 use similar terminology to that used in the requirement and are therefore consistent with the requirement.
FERC VSL G4	**Guideline 4: Violation Severity Level Assignment Should Be Based on A Single Violation, Not on A Cumulative Number of Violations** The proposed VSLs for PRC-010-1 Requirement R8 are based on a single violation and not cumulative violations.

NERC
NORTH AMERICAN ELECTRIC RELIABILITY CORPORATION

Standards Announcement

Project 2008-02.2 Phase 2 Undervoltage Load Shedding (UVLS): Misoperations

Formal Comment Period Now Open through April 7, 2015
Ballot Pool Forming Now through March 23, 2015

Balloting and commenting for this project are in the Standards Balloting & Commenting System (SBS)

Now Available

A 45-day formal comment period for **PRC-004-5 – Protection System Misoperation Identification and Correction and PRC-010-2 – Under Voltage Load Shedding** is open through **8 p.m. Eastern on Tuesday, April 7, 2015.**

Standards Balloting and Commenting System (SBS) Login, Registration, Validation and Permissions

To **comment** in the SBS, you must have a contributor, voter, or proxy role.
To **join a ballot pool and vote** in the SBS, you must have a voter role.
To be a **proxy** and vote in the SBS, you must have a proxy role.

To register to become a proxy or voter in the SBS:

- Go to 'My User Profile'
- Select 'Click Here' to request additional permissions
- Select 'Voter' or 'Proxy Voter'

Commenting

Use the electronic form to submit comments on the standard(s). If you experience any difficulties in using the electronic form, contact Arielle Cunningham. An off-line, unofficial copy of the comment form is posted on the project page.

Join Ballot Pools

Ballot pools are currently being formed. Registered Ballot Body members must join the ballot pools to be eligible to cast a ballot. Registered Ballot Body members may join the ballot pools here.

NOTE: Initially, separate ballot pools were incorrectly created for PRC-004-5 and PRC-010-2. The SBS has been updated with one ballot pool to combine PRC-004-5 and PRC-010-2. If you have already joined the separate ballot pools, please register in the combined ballot pool.

RSAWs

The draft RSAWs for the standards **PRC-004-5 – Protection System Misoperation Identification and Correction and PRC-010-2 – Under Voltage Load Shedding** are posted on the project page. Submit comments regarding the draft RSAWs to RSAWfeedback@nerc.net**.**

Next Steps

An initial ballot for the standards and a non-binding poll of the associated Violation Risk Factors and Violation Severity Levels will be conducted **March 27 through April 7, 2015.**

For information on the **Standards Development Process**, refer to the Standard Processes Manual.

For more information or assistance, contact Standards Developer, Scott Barfield-McGinnis (via email), or by phone at (404) 446-9689.

North American Electric Reliability Corporation
3353 Peachtree Rd, NE
Suite 600, North Tower
Atlanta, GA 30326
404-446-2560 | www.nerc.com

Survey Report

Survey Details

Name 2008-02.2 Phase 2 UVLS PRC-004-5 & PRC-010-5

Description

Start Date 2/20/2015

End Date 4/8/2015

Associated Ballots

2008-02.2 Phase 2 UVLS PRC-004-5 & PRC-010-2 IN 1 ST

Survey Questions

See the Unofficial Comment Form on the Project Page for additional background information.

If you would like to bypass taking the survey, click the radio button and scroll down to submit the survey.

This will allow you to view Social Survey and agree / disagree with an already posted comment using the "thumbs up / thumbs down" feature.

Submitting a "thumbs up / thumbs down" on another entity's comment enables a negative vote to count in the

calculation of consensus.

I want to bypass taking the survey

1. Do you agree that the Misoperation identification and correction of UVLS equipment as retired by PRC-022-1, Requirements R1 and R1.5 is addressed by the proposed revisions of PRC-004-5 and PRC-010-2?

If not, please provide comments and suggestions to improve clarity.

Yes
No

Responses By Question

See the Unofficial Comment Form on the Project Page for additional background information.

John Fontenot - Bryan Texas Utilities - 1 -

Selected Answer:

Answer Comment:

Document Name:

Likes: 0

Dislikes: 0

John Fontenot - Bryan Texas Utilities - 1 -

Selected Answer:

Answer Comment:

Document Name:

Likes: 0

Dislikes: 0

Ken Lindberg - Bryan Texas Utilities - 5 - TRE

Selected Answer:

Answer Comment:

Document Name:

Likes: 0

Dislikes: 0

Glenn Pressler - CPS Energy - 1 -

Selected Answer:

Answer Comment:

Document Name:

Likes: 0

Dislikes: 0

Ken Lindberg - Bryan Texas Utilities - 5 -

Selected Answer:

Answer Comment:

Document Name:

Likes: 0

Dislikes: 0

John Williams - Tallahassee Electric (City of Tallahassee, FL) - 3 -

Selected Answer:

Answer Comment:

Document Name:

Likes: 0

Dislikes: 0

Dennis Minton - Florida Keys Electric Cooperative Assoc. - 1 -

Selected Answer:

Answer Comment:

Document Name:

Likes: 0

Dislikes: 0

Gul Khan - Gul Khan On Behalf of: Rod Kinard, Oncor Electric Delivery, 1

Selected Answer:

Answer Comment:

Document Name:

Likes: 0

Dislikes: 0

Charles Yeung - Southwest Power Pool, Inc. (RTO) - 2 - SPP

Selected Answer:

Answer Comment:

Document Name:

Likes: 0

Dislikes: 0

Dana Wheelock - Seattle City Light - 3 -

Selected Answer:

Answer Comment:

Document Name:

Likes: 0

Dislikes: 0

Glenn Pressler - CPS Energy - 1 -

Selected Answer:

Answer Comment:

Document Name:

Likes: 0

Dislikes: 0

Thomas Foltz - AEP - 5 -

Selected Answer:

Answer Comment:

Document Name:

Likes: 0

Dislikes: 0

Si Truc Phan - Hydro-Qu?bec TransEnergie - 1 - NPCC

Selected Answer:

Answer Comment:

Document Name:

Likes: 0

Dislikes: 0

David Jendras - Ameren - Ameren Services - 3 -

Selected Answer:

Answer Comment:

Document Name:

Likes: 0

Dislikes: 0

Mike Smith - Manitoba Hydro - 1 -

Selected Answer:

Answer Comment:

Document Name:

Likes: 0

Dislikes: 0

Dennis Minton - Florida Keys Electric Cooperative Assoc. - 1 -

Selected Answer:

Answer Comment:

Document Name:

Likes: 0

Dislikes: 0

John Merrell - Tacoma Public Utilities (Tacoma, WA) - 1 -

Selected Answer:

Answer Comment:

Document Name:

Likes: 0

Dislikes: 0

Michael Jones - National Grid USA - 1 -

Selected Answer:

Answer Comment:

Document Name:

Likes: 0

Dislikes: 0

Michael Shaw - Lower Colorado River Authority - 6 -

Selected Answer:

Answer Comment:

Document Name:

Likes: 0

Dislikes: 0

Brian Shanahan - National Grid USA - 3 -

Selected Answer:

Answer Comment:

Document Name:

Likes: 0

Dislikes: 0

Dennis Minton - Florida Keys Electric Cooperative Assoc. - 1 -

Selected Answer:

Answer Comment:

Document Name:

Likes: 0

Dislikes: 0

Stephen Pogue - M and A Electric Power Cooperative - 3 -

Selected Answer:

Answer Comment:

Document Name:

Likes: 0

Dislikes: 0

John Fontenot - Bryan Texas Utilities - 1 -

Selected Answer:

Answer Comment:

Document Name:

Likes: 0

Dislikes: 0

christina bigelow - Electric Reliability Council of Texas, Inc. - 2 -

Selected Answer:

Answer Comment:

Document Name:

Likes: 0

Dislikes: 0

Chris Scanlon - Exelon - 1 -

Selected Answer:

Answer Comment:

Document Name:

Likes: 0

Dislikes: 0

Shari Heino - Brazos Electric Power Cooperative, Inc. - 5 -

Selected Answer:

Answer Comment:

Document Name:

Likes: 0

Dislikes: 0

Shari Heino - Brazos Electric Power Cooperative, Inc. - 5 -

Selected Answer:

Answer Comment:

Document Name:

Likes: 0

Dislikes: 0

Chris Gowder - Florida Municipal Power Agency - 3,4,5,6 - FRCC

Selected Answer:

Answer Comment:

Document Name:

Likes: 0

Dislikes: 0

Kaleb Brimhall - Colorado Springs Utilities - 5 -

Selected Answer:

Answer Comment:

Document Name:

Likes: 0

Dislikes: 0

Barb Nutter - Other - NA - Not Applicable - NA - Not Applicable

Selected Answer:

Answer Comment:

Document Name:

Likes: 0

Dislikes: 0

Lee Pedowicz - Northeast Power Coordinating Council - 10 - NPCC

Error: Subreport could not be shown.

Selected Answer:

Answer Comment:

Document Name:

Likes: 0

Dislikes: 0

Dennis Chastain - Tennessee Valley Authority - 1,3,5,6 - SERC

Selected Answer:

Answer Comment:

Document Name:

Likes: 0

Dislikes: 0

Matt Culverhouse - City of Bartow, Florida - 3 -

Selected Answer:

Answer Comment:

Document Name:

Likes: 0

Dislikes: 0

Payam Farahbakhsh - Hydro One Networks, Inc. - 1 -

Selected Answer:

Answer Comment:

Document Name:

Likes: 0

Dislikes: 0

Mark Wilson - Mark Wilson On Behalf of: Leonard Kula, Independent Electricity System Operator, 2

Selected Answer:

Answer Comment:

Document Name:

Likes: 0

Dislikes: 0

Jeni Renew - SERC Reliability Corporation - 10 - SERC

Error: Subreport could not be shown.

Selected Answer:

Answer Comment:

Document Name:

Likes: 0

Dislikes: 0

Rachel Coyne - Texas Reliability Entity, Inc. - 10 -

Selected Answer:

Answer Comment:

Document Name:

Likes: 0

Dislikes: 0

Oliver Burke - Entergy - Entergy Services, Inc. - 1 -

Selected Answer:

Answer Comment:

Document Name:

Likes: 0

Dislikes: 0

Gul Khan - Gul Khan On Behalf of: Rod Kinard, Oncor Electric Delivery, 1

Selected Answer:

Answer Comment:

Document Name:

Likes: 0

Dislikes: 0

Kathleen Black - DTE Energy - 3,4,5 - RFC

Selected Answer:

Answer Comment:

Document Name:

Likes: 0

Dislikes: 0

Catherine Wesley - PJM Interconnection, L.L.C. - 2 - SERC,RFC

Selected Answer:

Answer Comment:

Document Name:

Likes: 0

Dislikes: 0

Richard Vine - California ISO - 2 -

Selected Answer:

Answer Comment:

Document Name:

Likes: 0

Dislikes: 0

Brian Evans-Mongeon - Utility Services, Inc. - 4 -

Selected Answer:

Answer Comment:

Document Name:

Likes: 0

Dislikes: 0

Colby Bellville - Duke Energy - 1,3,5,6 - FRCC,SERC,RFC

Error: Subreport could not be shown.

Selected Answer:

Answer Comment:

Document Name:

Likes: 0

Dislikes: 0

Paul Malozewski - Hydro One Networks, Inc. - 3 -

Selected Answer:

Answer Comment:

Document Name: Hydro One Comment on Project 2008-02.2.docx

Likes: 0

Dislikes: 0

George Tatar - Black Hills Corporation - 5 -

Selected Answer:

Answer Comment:

Document Name:

Likes: 0

Dislikes: 0

Jason Marshall - ACES Power Marketing - 6 - MRO,WECC,TRE,SERC,SPP,RFC

Error: Subreport could not be shown.

Selected Answer:

Answer Comment:

Document Name:

Likes: 0

Dislikes: 0

Shannon Mickens - Southwest Power Pool, Inc. (RTO) - 2 - SPP

Error: Subreport could not be shown.

Selected Answer:

Answer Comment:

Document Name:

Likes: 0

Dislikes: 0

Daniela Hammons - CenterPoint Energy Houston Electric, LLC - 1 - TRE

Selected Answer:

Answer Comment:

Document Name:

Likes: 0

Dislikes: 0

Paul Shipps - Lakeland Electric - 6 -

Selected Answer:

Answer Comment:

Document Name:

Likes: 0

Dislikes: 0

Sergio Banuelos - Tri-State G and T Association, Inc. - 1,3,5 - MRO,WECC

Selected Answer:

Answer Comment:

Document Name:

Likes: 0

Dislikes: 0

Oshani Pathirane - Hydro One Networks, Inc. - 1 - NPCC

Selected Answer:

Answer Comment:

Document Name: Hydro One's additional comments on Project 2008-02.2.docx

Likes: 0

Dislikes: 0

Molly Devine - IDACORP - Idaho Power Company - 1 -

Selected Answer:

Answer Comment:

Document Name:

Likes: 0

Dislikes: 0

Cain Braveheart - Bonneville Power Administration - 1,3,5,6 - WECC

Error: Subreport could not be shown.

Selected Answer:

Answer Comment:

Document Name:

Likes: 0

Dislikes: 0

Terry BIlke - Midcontinent ISO, Inc. - 2 -

Selected Answer:

Answer Comment:

Document Name:

Likes: 0

Dislikes: 0

Bernard Johnson - Oglethorpe Power Corporation - 5 -

Selected Answer:

Answer Comment:

Document Name:

Likes: 0

Dislikes: 0

If you would like to bypass taking the survey, click the radio button and scroll down to submit the survey.

This will allow you to view Social Survey and agree / disagree with an already posted comment using the "thumbs up / thumbs down" feature.

Submitting a "thumbs up / thumbs down" on another entity's comment enables a negative vote to count in the calculation of consensus.

John Fontenot - Bryan Texas Utilities - 1 -

Selected Answer: I want to bypass taking the survey

Answer Comment:

Document Name:

Likes: 0

Dislikes: 0

John Fontenot - Bryan Texas Utilities - 1 -

Selected Answer: I want to bypass taking the survey

Answer Comment:

Document Name:

Likes: 0

Dislikes: 0

Ken Lindberg - Bryan Texas Utilities - 5 - TRE

Selected Answer: I want to bypass taking the survey

Answer Comment:

Document Name:

Likes: 0

Dislikes: 0

Glenn Pressler - CPS Energy - 1 -

Selected Answer: I want to bypass taking the survey

Answer Comment:

Document Name:

Likes: 0

Dislikes: 0

Ken Lindberg - Bryan Texas Utilities - 5 -

Selected Answer: I want to bypass taking the survey

Answer Comment:

Document Name:

Likes: 0

Dislikes: 0

John Williams - Tallahassee Electric (City of Tallahassee, FL) - 3 -

Selected Answer: I want to bypass taking the survey

Answer Comment:

Document Name:

Likes: 0

Dislikes: 0

Dennis Minton - Florida Keys Electric Cooperative Assoc. - 1 -

Selected Answer:

Answer Comment:

Document Name:

Likes: 0

Dislikes: 0

Gul Khan - Gul Khan On Behalf of: Rod Kinard, Oncor Electric Delivery, 1

Selected Answer:

Answer Comment:

Document Name:

Likes: 0

Dislikes: 0

Charles Yeung - Southwest Power Pool, Inc. (RTO) - 2 - SPP

Selected Answer: I want to bypass taking the survey

Answer Comment:

Document Name:

Likes: 0

Dislikes: 0

Dana Wheelock - Seattle City Light - 3 -

Selected Answer: I want to bypass taking the survey

Answer Comment:

Document Name:

Likes: 0

Dislikes: 0

Glenn Pressler - CPS Energy - 1 -

Selected Answer: I want to bypass taking the survey

Answer Comment:

Document Name:

Likes: 0

Dislikes: 0

Thomas Foltz - AEP - 5 -

Selected Answer:

Answer Comment:

Document Name:

Likes: 0

Dislikes: 0

Si Truc Phan - Hydro-Qu?bec TransEnergie - 1 - NPCC

Selected Answer: I want to bypass taking the survey

Answer Comment:

Document Name:

Likes: 0

Dislikes: 0

David Jendras - Ameren - Ameren Services - 3 -

Selected Answer: I want to bypass taking the survey

Answer Comment:

Document Name:

Likes: 0

Dislikes: 0

Mike Smith - Manitoba Hydro - 1 -

Selected Answer:

Answer Comment:

Document Name:

Likes: 0

Dislikes: 0

Dennis Minton - Florida Keys Electric Cooperative Assoc. - 1 -

Selected Answer:

Answer Comment:

Document Name:

Likes: 0

Dislikes: 0

John Merrell - Tacoma Public Utilities (Tacoma, WA) - 1 -

Selected Answer:

Answer Comment:

Document Name:

Likes: 0

Dislikes: 0

Michael Jones - National Grid USA - 1 -

Selected Answer:

Answer Comment:

Document Name:

Likes: 0

Dislikes: 0

Michael Shaw - Lower Colorado River Authority - 6 -

Selected Answer:

Answer Comment:

Document Name:

Likes: 0

Dislikes: 0

Brian Shanahan - National Grid USA - 3 -

Selected Answer:

Answer Comment:

Document Name:

Likes: 0

Dislikes: 0

Dennis Minton - Florida Keys Electric Cooperative Assoc. - 1 -

Selected Answer: I want to bypass taking the survey

Answer Comment:

Document Name:

Likes: 0

Dislikes: 0

Stephen Pogue - M and A Electric Power Cooperative - 3 -

Selected Answer: I want to bypass taking the survey

Answer Comment:

Document Name:

Likes: 0

Dislikes: 0

John Fontenot - Bryan Texas Utilities - 1 -

Selected Answer:

Answer Comment:

Document Name:

Likes: 0

Dislikes: 0

christina bigelow - Electric Reliability Council of Texas, Inc. - 2 -

Selected Answer:

Answer Comment:

Document Name:

Likes: 0

Dislikes: 0

Chris Scanlon - Exelon - 1 -

Selected Answer: I want to bypass taking the survey

Answer Comment:

Document Name:

Likes: 0

Dislikes: 0

Shari Heino - Brazos Electric Power Cooperative, Inc. - 5 -

Selected Answer: I want to bypass taking the survey

Answer Comment:

Document Name:

Likes: 0

Dislikes: 0

Shari Heino - Brazos Electric Power Cooperative, Inc. - 5 -

Selected Answer:

Answer Comment:

Document Name:

Likes: 0

Dislikes: 0

Chris Gowder - Florida Municipal Power Agency - 3,4,5,6 - FRCC

Selected Answer: I want to bypass taking the survey

Answer Comment:

Document Name:

Likes: 0

Dislikes: 0

Kaleb Brimhall - Colorado Springs Utilities - 5 -

Selected Answer: I want to bypass taking the survey

Answer Comment:

Document Name:

Likes: 0

Dislikes: 0

Barb Nutter - Other - NA - Not Applicable - NA - Not Applicable

Selected Answer:

Answer Comment:

Document Name:

Likes: 0

Dislikes: 0

Lee Pedowicz - Northeast Power Coordinating Council - 10 - NPCC

Error: Subreport could not be shown.

Selected Answer:

Answer Comment:

Document Name:

Likes: 0

Dislikes: 0

Dennis Chastain - Tennessee Valley Authority - 1,3,5,6 - SERC

Selected Answer:

Answer Comment:

Document Name:

Likes: 0

Dislikes: 0

Matt Culverhouse - City of Bartow, Florida - 3 -

Selected Answer: I want to bypass taking the survey

Answer Comment:

Document Name:

Likes: 0

Dislikes: 0

Payam Farahbakhsh - Hydro One Networks, Inc. - 1 -

Selected Answer:

Answer Comment:

Document Name:

Likes: 0

Dislikes: 0

Mark Wilson - Mark Wilson On Behalf of: Leonard Kula, Independent Electricity System Operator, 2

Selected Answer:

Answer Comment:

Document Name:

Likes: 0

Dislikes: 0

Jeni Renew - SERC Reliability Corporation - 10 - SERC

Error: Subreport could not be shown.

Selected Answer:

Answer Comment:

Document Name:

Likes: 0

Dislikes: 0

Rachel Coyne - Texas Reliability Entity, Inc. - 10 -

Selected Answer:

Answer Comment:

Document Name:

Likes: 0

Dislikes: 0

Oliver Burke - Entergy - Entergy Services, Inc. - 1 -

Selected Answer:

Answer Comment:

Document Name:

Likes: 0

Dislikes: 0

Gul Khan - Gul Khan On Behalf of: Rod Kinard, Oncor Electric Delivery, 1

Selected Answer:

Answer Comment:

Document Name:

Likes: 0

Dislikes: 0

Kathleen Black - DTE Energy - 3,4,5 - RFC

Selected Answer: I want to bypass taking the survey

Answer Comment:

Document Name:

Likes: 0

Dislikes: 0

Catherine Wesley - PJM Interconnection, L.L.C. - 2 - SERC,RFC

Selected Answer: I want to bypass taking the survey

Answer Comment:

Document Name:

Likes: 0

Dislikes: 0

Richard Vine - California ISO - 2 -

Selected Answer: I want to bypass taking the survey

Answer Comment:

Document Name:

Likes: 0

Dislikes: 0

Brian Evans-Mongeon - Utility Services, Inc. - 4 -

Selected Answer: I want to bypass taking the survey

Answer Comment:

Document Name:

Likes: 0

Dislikes: 0

Colby Bellville - Duke Energy - 1,3,5,6 - FRCC,SERC,RFC

Error: Subreport could not be shown.

Selected Answer:

Answer Comment:

Document Name:

Likes: 0

Dislikes: 0

Paul Malozewski - Hydro One Networks, Inc. - 3 -

Selected Answer:

Answer Comment:

Document Name:

Likes: 0

Dislikes: 0

George Tatar - Black Hills Corporation - 5 -

Selected Answer: I want to bypass taking the survey

Answer Comment:

Document Name:

Likes: 0

Dislikes: 0

Jason Marshall - ACES Power Marketing - 6 - MRO,WECC,TRE,SERC,SPP,RFC

Error: Subreport could not be shown.

Selected Answer:

Answer Comment:

Document Name:

Likes: 0

Dislikes: 0

Shannon Mickens - Southwest Power Pool, Inc. (RTO) - 2 - SPP

Error: Subreport could not be shown.

Selected Answer:

Answer Comment:

Document Name:

Likes: 0

Dislikes: 0

Daniela Hammons - CenterPoint Energy Houston Electric, LLC - 1 - TRE

Selected Answer:

Answer Comment:

Document Name:

Likes: 0

Dislikes: 0

Paul Shipps - Lakeland Electric - 6 -

Selected Answer:

Answer Comment:

Document Name:

Likes: 0

Dislikes: 0

Sergio Banuelos - Tri-State G and T Association, Inc. - 1,3,5 - MRO,WECC

Selected Answer:

Answer Comment:

Document Name:

Likes: 0

Dislikes: 0

Oshani Pathirane - Hydro One Networks, Inc. - 1 - NPCC

Selected Answer:

Answer Comment:

Document Name:

Likes: 0

Dislikes: 0

Molly Devine - IDACORP - Idaho Power Company - 1 -

Selected Answer:

Answer Comment:

Document Name:

Likes: 0

Dislikes: 0

Cain Braveheart - Bonneville Power Administration - 1,3,5,6 - WECC

Error: Subreport could not be shown.

Selected Answer:

Answer Comment:

Document Name:

Likes: 0

Dislikes: 0

Terry BIlke - Midcontinent ISO, Inc. - 2 -

Selected Answer: I want to bypass taking the survey

Answer Comment:

Document Name:

Likes: 0

Dislikes: 0

Bernard Johnson - Oglethorpe Power Corporation - 5 -

Selected Answer: I want to bypass taking the survey

Answer Comment:

Document Name:

Likes: 0

Dislikes: 0

1. Do you agree that the Misoperation identification and correction of UVLS equipment as retired by PRC-022-1, Requirements R1 and R1.5 is addressed by the proposed revisions of PRC-004-5 and PRC-010-2?

If not, please provide comments and suggestions to improve clarity.

John Fontenot - Bryan Texas Utilities - 1 -

Selected Answer: Yes

Answer Comment:

Document Name:

Likes: 0

Dislikes: 0

John Fontenot - Bryan Texas Utilities - 1 -

Selected Answer: Yes

Answer Comment:

Document Name:

Likes: 0

Dislikes: 0

Ken Lindberg - Bryan Texas Utilities - 5 - TRE

Selected Answer: Yes

Answer Comment:

Document Name:

Likes: 0

Dislikes: 0

Glenn Pressler - CPS Energy - 1 -

Selected Answer:

Answer Comment:

Document Name:

Likes: 0

Dislikes: 0

Ken Lindberg - Bryan Texas Utilities - 5 -

Selected Answer: Yes

Answer Comment:

Document Name:

Likes: 0

Dislikes: 0

John Williams - Tallahassee Electric (City of Tallahassee, FL) - 3 -

Selected Answer:

Answer Comment:

Document Name:

Likes: 0

Dislikes: 0

Dennis Minton - Florida Keys Electric Cooperative Assoc. - 1 -

Selected Answer: Yes

Answer Comment:

Document Name:

Likes: 0

Dislikes: 0

Gul Khan - Gul Khan On Behalf of: Rod Kinard, Oncor Electric Delivery, 1

Selected Answer: Yes

Answer Comment:

Document Name:

Likes: 0

Dislikes: 0

Charles Yeung - Southwest Power Pool, Inc. (RTO) - 2 - SPP

Selected Answer:

Answer Comment:

Document Name:

Likes: 0

Dislikes: 0

Dana Wheelock - Seattle City Light - 3 -

Selected Answer:

Answer Comment:

Document Name:

Likes: 0

Dislikes: 0

Glenn Pressler - CPS Energy - 1 -

Selected Answer: Yes

Answer Comment:

Document Name:

Likes: 0

Dislikes: 0

Thomas Foltz - AEP - 5 -

Selected Answer: No

Answer Comment:

PRC-010-2, R5:
UVLS entities should have input in the development of the CAP, as opposed to simply having it provided to them. We suggest adding the phrase “in accordance with the UVLS entities” so that R5 instead reads… “Each Planning Coordinator or Transmission Planner that identifies deficiencies in its UVLS Program during an assessment performed in either Requirement R3 or R4 shall, in accordance with the UVLS entities, develop a Corrective Action Plan to address the deficiencies and subsequently provide the Corrective Action Plan, including an implementation schedule, to UVLS entities…”

While AEP is supportive of the overall direction and substance of the proposed changes, we have chosen to vote negative driven by our objections to not involving the UVLS entities in the development of the CAP in R5.

Document Name:

Likes: 0

Dislikes: 0

Si Truc Phan - Hydro-Qu?bec TransEnergie - 1 - NPCC

Selected Answer: Yes

Answer Comment:

Document Name:

Likes: 0

Dislikes: 0

David Jendras - Ameren - Ameren Services - 3 -

Selected Answer:

Answer Comment:

Document Name:

Likes: 0

Dislikes: 0

Mike Smith - Manitoba Hydro - 1 -

Selected Answer: Yes

Answer Comment:

Document Name:

Likes: 0

Dislikes: 0

Dennis Minton - Florida Keys Electric Cooperative Assoc. - 1 -

Selected Answer: Yes

Answer Comment:

Document Name:

Likes: 0

Dislikes: 0

John Merrell - Tacoma Public Utilities (Tacoma, WA) - 1 -

Selected Answer: Yes

Answer Comment:

The proposed revisions appear to address Misoperation identification and correction of UVLS equipment. However, there may be some cases in which the timeframes in PRC-004-5 and PRC-010-2 are not completely compatible. Specifically, under PRC-010-2 Requirement R4, the Planning Coordinator (PC) or Transmission Planner (TP) has 12 calendar months of an event that resulted in a voltage excursion for which its UVLS Program was designed to operate to perform an assessment to evaluate the performance (i.e., operaton and non-operation) of the UVLS Program equipment. However, under PRC-004-5 Requirement R1, each Transmission Owner (TO) and Distribution Provider (DP) that owns a BES interrupting device that operated under the circumstances in Parts 1.1 through 1.3 only has 120 calendar days of the BES interrupting device operation to identify whether its Protection System component(s) caused a Misoperation. It seems like a TO or DP would have to determine if there was a Misoperation before the PC or TP might have completed their assessment. Could this result in premature determination by a TO or DP; or could a TO or DP come to a different conclusion than their PC or TP? It seems like the timeframes in these requirements need to be better aligned. Alternatively, perhaps only PRC-010-1 should be revised, or perhaps the distinction between what the two standards are requiring needs to be made clearer. Another possible issue is that each standard requires development of CAPs, and the timeframes required to develop the CAPs are different.

Document Name:

Likes: 0

Dislikes: 0

Michael Jones - National Grid USA - 1 -

Selected Answer: No

Answer Comment:

National Grid voted Negative regarding PRC-010-1 and continues to vote Negative regarding PRC-010-2. The concern is that R2 gives considerable authority to the Planning Coordinator or Transmission Planner. Nowhere in the new standard is there any provision for a UVLS entity such as a Transmisison Owner to comment or advise on the feasibility of the program specification, and particulary the implementation schedule. There should be an opportunity for the UVLS entity to provide input to the plan and schedule, and a mechanism for resolving disagreement. We have a similar concern with R5 with regard to the specification and executation of the Corrective Action Plan.

Please consider having separate ballots for PRC-010-2 and PRC-004-5, instead of a combined ballot.

Document Name:

Likes: 0

Dislikes: 0

Michael Shaw - Lower Colorado River Authority - 6 -

Selected Answer: Yes

Answer Comment:

Document Name:

Likes: 0

Dislikes: 0

Brian Shanahan - National Grid USA - 3 -

Selected Answer: No

Answer Comment:

National Grid voted Negative regarding PRC-010-1 and continues to vote Negative regarding PRC-010-2. The concern is that R2 gives considerable authority to the Planning Coordinator or Transmission Planner. Nowhere in the new standard is there any provision for a UVLS entity such as a Transmission Owner to comment or advise on the feasibility of the program specification, and particularly the implementation schedule. There should be an opportunity for the UVLS entity to provide input to the plan and schedule, and a mechanism for resolving disagreement. We have a similar concern with R5 with regard to the specification and execution of the Corrective Action Plan.

Please consider having separate ballots for PRC-010-2 and PRC-004-5, instead of a combined ballot.

Document Name:

Likes: 0

Dislikes: 0

Dennis Minton - Florida Keys Electric Cooperative Assoc. - 1 -

Selected Answer:

Answer Comment:

Document Name:

Likes: 0

Dislikes: 0

Stephen Pogue - M and A Electric Power Cooperative - 3 -

Selected Answer:

Answer Comment:

Document Name:

Likes: 0

Dislikes: 0

John Fontenot - Bryan Texas Utilities - 1 -

Selected Answer: Yes

Answer Comment:

Document Name:

Likes: 0

Dislikes: 0

---

christina bigelow - Electric Reliability Council of Texas, Inc. - 2 -

Selected Answer: Yes

Answer Comment:

Document Name:

Likes: 0

Dislikes: 0

Chris Scanlon - Exelon - 1 -

Selected Answer: Yes

Answer Comment:

Document Name:

Likes: 0

Dislikes: 0

Shari Heino - Brazos Electric Power Cooperative, Inc. - 5 -

Selected Answer:

Answer Comment:

Document Name:

Likes: 0

Dislikes: 0

Shari Heino - Brazos Electric Power Cooperative, Inc. - 5 -

Selected Answer: No

Answer Comment: See ACES comments

Document Name:

Likes: 0

Dislikes: 0

Chris Gowder - Florida Municipal Power Agency - 3,4,5,6 - FRCC

Selected Answer:

Answer Comment:

Document Name:

Likes: 0

Dislikes: 0

Kaleb Brimhall - Colorado Springs Utilities - 5 -

Selected Answer: Yes

Answer Comment:

Document Name:

Likes: 0

Dislikes: 0

Barb Nutter - Other - NA - Not Applicable - NA - Not Applicable

Selected Answer:

Answer Comment:

Team - this is a test comment from Barb Nutter

Document Name:

Likes: 0

Dislikes: 0

Lee Pedowicz - Northeast Power Coordinating Council - 10 - NPCC

Error: Subreport could not be shown.

Selected Answer: No

Answer Comment:

A general comment regarding the Applicability Section of PRC-004-5 is that the items listed under sub-Part 4.2.1 are not Facilities by NERC definition.

The addition of 4.2.3 to the Facilities Section “Undervoltage load shedding (UVLS) that is intended to trip one or more BES Elements” is not necessary. The BES definition excludes Elements that serve radial load. UVLS schemes are normally

intended to trip loads which are supplied by radial circuits (feeders), and these circuits (feeders) would not normally be included in the BES definition. It may be helpful for the drafting team to include an example in the application guideline to provide greater clarity.

In the Basis for Revision Section of what should be PRC-010-2, on page 3 of the standard, the last two sentences affirm that the rationale boxes in the Supplemental Material section of the standard will remain. The rationale box for Requirement R5 will be removed. The only Rationale Box in the B. Requirements and Measures section of the standard is for R4. Should the statement read "The rationale box for Requirement R4 will be removed."

We agree that the Misoperation identification and correction of UVLS equipment as retired by PRC-022-1, Requirements R1 and Part R1.5 is addressed by the proposed revisions of PRC-004-5 and PRC-010-2. However, the addition of Part 4.2 to PRC-010-2 may create duplicate effort for evaluating proper operations and misoperations of UVLS equipment.

This comment is made on the basis that PRC-004-4 already requires UVLS entities (TO, GO and DP) to assess and identify whether or not misoperations were the cause of BES interrupting device(s) (which now include UVLS) operations. Through this assessment and identification process, the proper or improper operations of the UVLS equipment would have been identified and, where necessary and appropriate, corrective action plans would have been developed and implemented. To have an additional Part 4.2 which requires the Planning Coordinator or Transmission Planner to evaluate the performance (i.e., operation and non-operation) of the UVLS Program seems redundant and unnecessary, despite such evaluation is performed by different responsible entities. Propose that Part 4.2 be removed.

Additionally, it is not clear which UVLS Misoperations are the subject of the proposed revised PRC-004-5 standard. The UVLS facilities of PRC-004-5 are "Undervoltage load shedding (UVLS) that is intended to trip one or more BES Elements." The typical UVLS schemes trip circuits (feeders) that supply loads. These circuits (feeders) are not normally BES elements since they are excluded by the BES definition that became effective July 1, 2014. Clarification is needed.

Document Name:

Likes: 0

Dislikes: 0

Dennis Chastain - Tennessee Valley Authority - 1,3,5,6 - SERC

Selected Answer: Yes

Answer Comment:

Document Name:

Likes: 0

Dislikes: 0

Matt Culverhouse - City of Bartow, Florida - 3 -

Selected Answer:

Answer Comment:

Document Name:

Likes: 0

Dislikes: 0

Payam Farahbakhsh - Hydro One Networks, Inc. - 1 -

Selected Answer:	Yes
Answer Comment:	The posted PRC-010-2 has requirement 4.2 applicable to PC and TP. However, PC/TP generally don't have the expertise for the design/engineering aspects. The SDT should consider making 4.2 applicable to the owners of the schemes.
Document Name:	
Likes:	0
Dislikes:	0

Mark Wilson - Mark Wilson On Behalf of: Leonard Kula, Independent Electricity System Operator, 2

Selected Answer:	No
Answer Comment:	We agree that the Misoperation identification and correction of UVLS equipment as retired by PRC-022-1, Requirements R1 and R1.5 is addressed by the proposed revisions of PRC-004-5 and PRC-010-2. However, the addition of Part 4.2 to PRC-010-2 may create duplicated effort for evaluating proper operations and misoperations of UVLS equipment. This comment is made on the basis that PRC-004-4 already requires UVLS entities (TO, GO and DP) to assess and identify whether or not misoperations were the cause of BES interrupting device(s) (which now include UVLS) operations. Through this assessment and identification process, the proper or improper operations of the UVLS equipment would have been identified and, where necessary and appropriate, corrective action plans would have been developed and implemented. To have an additional Part 4.2 which requires the Planning Coordinator or Transmission Planner to evaluate the performance (i.e., operation and non-operation) of the UVLS Program seems redundant and unnecessary, despite such evaluation is performed by different responsible entities. We therefore propose that Part 4.2 be removed.

Moreover, the IESO notes that the addition to the Facilities Section, bullet 4.2.3 “Undervoltage load shedding (UVLS) that is intended to trip one or more BES Elements” does not appear to be necessary. The BES definition excludes elements that serve radial load. UVLS schemes are normally intended to trip loads which are supplied by circuits (feeders). These circuits (feeders) would not normally be included in the BES definition. It may be helpful for the draft team to include an example in the application guideline to provide greater clarity.

Document Name:

Likes: 0

Dislikes: 0

Jeni Renew - SERC Reliability Corporation - 10 - SERC

Error: Subreport could not be shown.

Selected Answer: No

Answer Comment:

1) On the clean versions of PRC-010-2 and PRC-004-5, please remove the 'under' after ‘BES Element’ in the Basis for Revision on page 2 last paragraph. "The two-pronged approach ensures that any UVLS Program equipment containing a deficiency is identified and corrected under PRC-010 and UVLS that trips a BES Element ***under*** is corrected under PRC-004 to address the requirements in the retired PRC-022-1."

2) PRC-004-5 and PRC-010-2 both require development of corrective action plans (CAP) with different time requirements (PRC-010-2 provides 12 months to analyze an operation. PRC-004-5 R1 requires identification in 120 days. Does the 120 days start during the 12 months of analysis or is the expectation that the Misoperation will be identified in the first 120 days if a BES Element is involved?) Can you provide examples to clarify which standard is to be referenced for developing the CAP?

3) Please explain how there is no double jeopardy having requirements for CAPS in multiple standards?

Example: An entity has a BES breaker that should have tripped during a UVLS event but did not trip. Is this reportable under PRC-010-2 or PRC-004-5? Which standard's time frame applies?

Document Name:

Likes: 0

Dislikes: 0

Rachel Coyne - Texas Reliability Entity, Inc. - 10 -

Selected Answer: No

Answer Comment:

Texas RE is concerned that an entity will not analyze a mis-operation if it does not trip a BES element. The language in PRC-004-5, "intended to trip one or more BES elements", may create a reliability gap. In the ERCOT region, there is little to no UVLS or UFLS that will or is intended to trip a BES element. It is not in the best interest of reliability to have a mis-operation occur and an entity not be required to analyze the issue and provide corrective actions.

Furthermore, there is an inconsistency with the language in PRC-010-2 and PRC-004-5 due to the use of the word "impact" indicated in PRC-010-2. In the ERCOT region, relays can have a major impact on the BES and would meet the requirements of PRC-010-2. Unfortunately, because of the language included in PRC-004-5, if entity determines that the UVLS is not intended to trip BES elements, the mis-operation would not need to be analyzed.

Document Name:

Likes: 0

Dislikes: 0

Oliver Burke - Entergy - Entergy Services, Inc. - 1 -

Selected Answer: No

Answer Comment:

Entergy supports comments provided by SERC PCS group.

Document Name:

Likes: 0

Dislikes: 0

Gul Khan - Gul Khan On Behalf of: Rod Kinard, Oncor Electric Delivery, 1

Selected Answer: Yes

Answer Comment:

Document Name:

Likes: 0

Dislikes: 0

Kathleen Black - DTE Energy - 3,4,5 - RFC

Selected Answer: Yes

Answer Comment:

Document Name:

Likes: 0

Dislikes: 0

Catherine Wesley - PJM Interconnection, L.L.C. - 2 - SERC,RFC

Selected Answer: Yes

Answer Comment:

Document Name:

Likes: 0

Dislikes: 0

Richard Vine - California ISO - 2 -

Selected Answer:

Answer Comment:

Document Name:

Likes: 0

Dislikes: 0

Brian Evans-Mongeon - Utility Services, Inc. - 4 -

Selected Answer:

Answer Comment:

Document Name:

Likes: 0

Dislikes: 0

Colby Bellville - Duke Energy - 1,3,5,6 - FRCC,SERC,RFC

Error: Subreport could not be shown.

Selected Answer: Yes

Answer Comment:

Duke Energy agrees with the proposal made by the drafting team. We thank the drafting team for their efforts.

Document Name:

Likes: 0

Dislikes: 0

Paul Malozewski - Hydro One Networks, Inc. - 3 -

Selected Answer:

Answer Comment:

Document Name:

Likes: 0

Dislikes: 0

George Tatar - Black Hills Corporation - 5 -

Selected Answer:

Answer Comment:

Document Name:

Likes: 0

Dislikes: 0

Jason Marshall - ACES Power Marketing - 6 - MRO,WECC,TRE,SERC,SPP,RFC

Error: Subreport could not be shown.

Selected Answer: No

Answer Comment:

(1) We believe that the modifications to PRC-010 and PRC-004 are duplicative and overlapping. As proposed, PRC-004 will require equipment owners to evaluate any UVLS relay that they have installed regardless of whether it is part of

an RAS, UVLS Program or installed independently for local reasons, while PRC-010 requires the PC or TP to evaluate the "performance of UVLS Program equipment" for voltage excursions. While we disagree with the TP or PC having responsibility to evaluate equipment performance, we are even more concerned that there is not a clear delineation between when PRC-004 applies for evaluating equipment performance and when PRC-010 applies. As written now, there would appear to be an overlap when UVLS relays that are part of a UVLS program operate. A simple solution to eliminate this overlap and duplication would be to strike Part 4.2. Then, the PC and TP would appropriately rely the equipment owners to perform their own evaluation, which is where the responsibility should belong.

(2) The supporting documentation such as the Basis for Revision, Guidelines and Technical Basis and Frequently Asked Questions neither adequately explain the need for duplication between PRC-004 and PRC-010 nor the demarcation for responsibility for evaluating equipment performance. In fact, these supporting documents actually are contradictory at times. For example, the end of the second paragraph states that PRC-004 does not cover the "performance (operation or non-operations) of UVLS Program equipment not covered by the strict process of PRC-004". Yet it never explains how PRC-004 does not cover the performance. We disagree and believe it does cover the performance. If the drafting team intends the performance of the equipment to be something different than whether the UVLS relays operated correctly or not, this needs further explained in the technical guidelines as there is little to no explanation of what is meant beyond correct operation of the relays. Near the end of the first paragraph for the "Guidelines for Requirement R4," the paragraph states that "Misoperation of UVLS equipment is addressed as a deficiency" in PRC-010. This seems to contradict the inclusion of all UVLS equipment installed to trip BES equipment in thePRC-004 applicability section where it is processed as a Misoperation. In the second paragraph of the response to the fourth FAQ, there is a statement that the definition of UVLS Program "does not explicitly note that the term excludes centrally controlled undervoltage-based load shedding." To the contrary, the last sentence of UVLS program quite clearly excludes centrally controlled UVLS.

(3) As proposed, PRC-004 will apply to all UVLS relays that can trip BES Elements including those that are part of a UVLS program and those that are not part of a UVLS program. That latter category include the centrally controlled UVLS or UVLS installed to protect local areas or equipment. While application of PRC-004 to UVLS installed to protect local areas may be appropriate, it is not appropriate to include those that are part of a centrally controlled system as this would be considered a RAS to which PRC-016 would apply. In the "Guideline for UVLS Program Definition," it is stated very clearly that a centrally controlled UVLS

system is a RAS.

(4) The VSLs for PRC-010 R4 were not modified in response to the modification of the requirement. It is now possible to partially meet the main requirement within the associated time frame. The VSLs should reflect this.

Document Name:

Likes: 0

Dislikes: 0

Shannon Mickens - Southwest Power Pool, Inc. (RTO) - 2 - SPP

Error: Subreport could not be shown.

Selected Answer: Yes

Answer Comment:

We agree that specific steps are needed to be taken to continuously improve the reliability of the Bulk Electric System (BES). The evaluating and documenting of the process helps to identify critical facilities (which could lead to Misoperations) and to ensure that the same issues doesn't reoccur on the system. Additionally, the documented information can be used to help develop and implement a Correction Action Plan (CAP) with accuracy when it's required. We would like to thank the drafting team for making great efforts to address the industry's needs.

Additionally, we would like to suggest to the drafting team to include the term 'undervoltage-based load shedding' to the definition of the Remedial Action Scheme for consistency. In the Compliance Assessment Approach Specifics Section (RSAW-PRC-010-2) R1…Note to Auditor, our interpretation is that the term 'undervoltage-based load shedding' is not a part of the UVLS Program and it states that this term falls under the NERC Glossary definition of Remedial Action Scheme (RAS). However if you go out to the NERC site, the current definition of Remedial Action Scheme (RAS) doesn't not contain this particular term.

Document Name:

Likes: 0

Dislikes: 0

Daniela Hammons - CenterPoint Energy Houston Electric, LLC - 1 - TRE

Selected Answer: Yes

Answer Comment:

(1) CenterPoint Energy agrees that the Misoperation identification and correction of UVLS equipment as retired by PRC-022-1, Requirements R1 and R1.5, is addressed by the proposed revisions of PRC-004-5 and PRC-010-2. However, the Company cannot support this draft of PRC-010-2 due to the current wording of Requirement R4.2.

(2) The drafting team proposes to add Requirement R4.2 to Requirement R4 in PRC-010 as follows: Each Planning Coordinator or Transmission Planner shall, within 12 calendar months of an event that resulted in a voltage excursion for which its UVLS Program was designed to operate, perform an assessment to evaluate: 4.1. Whether its UVLS Program resolved the undervoltage issues associated with the event, and 4.2. The performance (i.e., operation and non-operation) of the UVLS Program equipment. CenterPoint Energy believes a more relevant method to capture the essence of PRC-022 Requirements R1 and R1.5 is to revise Requirement R4.2 as follows: Whether the UVLS entity(ies) adhered to the UVLS Program specifications. With this revised wording for Requirement R4.2, the assessment required under Requirement R4 would address whether the UVLS Program resolved the undervoltage issue associated with the event and whether the UVLS entity or entities involved adhered to the established UVLS Program specifications. It would be obvious that the operation of the UVLS Program equipment performed adequately when the amount(s) of load shedding in a voltage excursion event meets the expected minimum amount(s) as specified in a UVLS Program. However, while an assessment (Requirement R4.1) may determine the voltage excursion event was resolved for the specific system conditions and specific contingency, the UVLS Program may have been developed for other system conditions and more severe contingencies. Therefore, the assessment (Requirement R4.2) must include whether the UVLS entity(ies) met the obligated amount of load shedding specified by the Planning Coordinator or Transmission Planner. With a large number of UVLS equipment components, it is possible that a small number may not operate (i.e., “non-operation”). Examples of

UVLS equipment non-operation would include the following: equipment problems such as a defective trip coil in a distribution circuit breaker or a defective relay and distribution circuit breaker unavailability due to maintenance (routine preventive or corrective) or construction (breaker replacement or station expansion). A small number of non-operations are inconsequential if the amount(s) of load shedding meets Planning Coordinator or Transmission Planner expectations. Furthermore, any deficiencies identified by either the proposed Requirement R4.1 or the revised wording for Requirement R4.2 would result in a Corrective Action Plan under Requirement R5.

Document Name:

Likes: 0

Dislikes: 0

Paul Shipps - Lakeland Electric - 6 -

Selected Answer: Yes

Answer Comment:

Document Name:

Likes: 0

Dislikes: 0

Sergio Banuelos - Tri-State G and T Association, Inc. - 1,3,5 - MRO,WECC

Selected Answer: Yes

Answer Comment:

Tri-State suggests changing the implementation plans for PRC-004-5 and PRC-010-2. They both use PRC-010-1 as a reference point even though it has not yet

been approved by FERC and therefore has no definitive effective date. If PRC-010-1 doesn't get approved before these versions do then, according to the implementation plans, these versions will be effective the 1st day of the 1st calendar quarter after the standards get approved by FERC. The drafting team should edit the implementation plans to allow more time for entities to prepare for the effective date if that were the case. We would suggest some language stating that the standards will become effective on the 1st day of the 1st calendar quarter that is 12 months after approval which would be similar to the time provided in PRC-010-1.

Document Name:

Likes: 0

Dislikes: 0

Oshani Pathirane - Hydro One Networks, Inc. - 1 - NPCC

Selected Answer:

Answer Comment:

Document Name:

Likes: 0

Dislikes: 0

Molly Devine - IDACORP - Idaho Power Company - 1 -

Selected Answer: No

Answer Comment:

In PRC-004-5 Applicability section 4.2.3 I suggest using the phrase "Undervoltage Load Shedding (UVLS) Program equipment that is intended to trip one or more

BES Elements". This clarifies the equipment to be analyzed is part of a UVLS Program, which I believe is the intent.

Document Name:

Likes: 0

Dislikes: 0

Cain Braveheart - Bonneville Power Administration - 1,3,5,6 - WECC

Error: Subreport could not be shown.

Selected Answer: Yes

Answer Comment:

Document Name:

Likes: 0

Dislikes: 0

Terry Bllke - Midcontinent ISO, Inc. - 2 -

Selected Answer: Yes

Answer Comment:

Document Name:

Likes: 0

Dislikes: 0

Bernard Johnson - Oglethorpe Power Corporation - 5 -

Selected Answer:

Answer Comment:

Document Name:

Likes: 0

Dislikes: 0

Additional Comments

Puget Sound Energy
Karen Silverman

NERC Question:

Do you agree that the Misoperation identification and correction of UVLS equipment as retired by PRC-022-1, Requirements R1 and R1.5 is addressed by the proposed revisions of PRC-004-5 and PRC-010-2? If not, please provide comments and suggestions to improve clarity.

PSE Answer:

No.

If modelled like PRC-006 (UFLS Program), PRC-010 could just govern design and documentation of UVLS Program mitigation of voltage instability, voltage collapse or Cascading impacting the Bulk Electric System. Misoperations and resulting CAPs could be covered under PRC-004-5. CAP Example #2 on Page 25 of PRC-010 should be included in PRC-004-5

Hydro One Networks
Paul Malozewski
Oshani Pathirane

Hot Answers

A: N/A

Paul Malozewski, Hydro One Networks, Inc., 3, 4/7/2015

Hydro One Comment on Project 2008-02.2.docx

- 0 - 0

Hydro One supports the following comment already submitted by the TFSP: " the addition to the Facilities Section, bullet 4.2.3 "Undervoltage load shedding (UVLS) that is intended to trip one or more BES Elements" does not appear to be necessary. The BES definition excludes elements that serve radial load. UVLS schemes are normally intended to trip loads which are supplied by circuits (feeders). These circuits (feeders) would not normally be included in the BES definition. It may be helpful for the draft team to include an example in the application guideline to provide greater clarity".

A: N/A

Oshani Pathirane, **On Behalf of:** Hydro One Networks, Inc., NPCC, Segments 1

Hydro One's additional comments on Project 2008-02.2.docx

- 0 - 0

Part 4.2 is specific to all devices not just BES as required under PRC-004. It puts the onus on the RC/TP to assess the success of the program if ever called upon to work. It is different than the PRC-004 requirement.

Southwest Power Pool
Charles Yeung

Question

1. Do you agree that the Misoperation identification and correction of UVLS equipment as retired by PRC-022-1, Requirements R1 and R1.5 is addressed by the proposed revisions of PRC-004-5 and PRC-010-2? If not, please provide comments and suggestions to improve clarity.

☐ Yes

X No

Comments:

1. In PRC-10, the applicable entities defines "UVLS entities" as those Transmission Owners with UVLS equipment. However, R1.2, requires PCs and TPs to consider the generator ride-through capabilities in their UVLS program studies. Generator data is needed from Generator Owners. These should be applicable entities to PRC-010 as well.

We agree that the Misoperation identification and correction of UVLS equipment, as retired by PRC-022-1, Requirements R1 and R1.5, are addressed by the proposed revisions of PRC-004-5 and PRC-010-2. However, the addition of Part 4.2 to PRC-010-2 may create redundant efforts regarding evaluation of the proper operations and misoperations of UVLS equipment. More specifically, PRC-004-4 already requires UVLS entities (TO, GO and DP) to assess and identify whether or not misoperations were the cause of BES interrupting device(s) (which now include UVLS) operations). Through this assessment and identification process, the proper or improper operations of the UVLS equipment would have been identified and, where necessary and appropriate, corrective action plans would have been developed and implemented. The addition of Part 4.2, which requires the Planning Coordinator or Transmission Planner to evaluate the performance (i.e., operation and non-operation) of the UVLS Program, seems redundant to the efforts of the UVLS entities. Further, as the UVLS entities are the entities that actually operate, control, and maintain the UVLS equipment, such entities would be in the best position to perform a thorough evaluation of the operation or misoperation of such equipment. The SRC, therefore, proposes that Part 4.2 in PRC-010-2 be removed or revised to remove redundancy and ensure that the most appropriate entity is performing such assessments. Should the SDT recommend that an independent review of such assessments and corrective actions occur, such could be considered in the context of Part 4.2

NERC
NORTH AMERICAN ELECTRIC RELIABILITY CORPORATION

Standards Announcement

Reminder

Project 2008-02.2 Phase 2 Undervoltage Load Shedding (UVLS): Misoperations

Initial Ballot and Non-binding Poll Open through April 7, 2015

Now Available

An Initial ballot for **PRC-004-5 – Protection System Misoperation Identification and Correction** and **PRC-010-2 – Undervoltage Load Shedding** and a non-binding poll of the associated Violation Risk Factors (VRFs) and Violation Severity Levels (VSLs) are open through **8 p.m. Eastern, Tuesday, April 7, 2015.**

Balloting

Members of the ballot pools associated with this project may log in and submit their votes for the standard and associated VRFs and VSLs by clicking here.

Next Steps

The ballot results will be announced and posted on the project page. The drafting team will consider all comments received during the formal comment period and, if needed, make revisions to the standard and post it for an additional ballot. If the comments do not show the need for significant revisions, the standard will proceed to a final ballot.

For information on the **Standards Development Process**, refer to the Standard Processes Manual.

For more information or assistance, contact Standards Developer, Scott Barfield-McGinnis (via email), or at (404) 446-9689.

North American Electric Reliability Corporation
3353 Peachtree Rd, NE
Suite 600, North Tower
Atlanta, GA 30326
404-446-2560 | www.nerc.com

NERC
NORTH AMERICAN ELECTRIC RELIABILITY CORPORATION

Standards Announcement

Project 2008-02.2 Phase 2 Undervoltage Load Shedding (UVLS): Misoperations

Formal Comment Period Now Open through April 7, 2015
Ballot Pool Forming Now through March 23, 2015

Balloting and commenting for this project are in the Standards Balloting & Commenting System (SBS)

Now Available

A 45-day formal comment period for **PRC-004-5 – Protection System Misoperation Identification and Correction and PRC-010-2 – Under Voltage Load Shedding** is open through **8 p.m. Eastern on Tuesday, April 7, 2015.**

Standards Balloting and Commenting System (SBS) Login, Registration, Validation and Permissions

To **comment** in the SBS, you must have a contributor, voter, or proxy role.
To **join a ballot pool and vote** in the SBS, you must have a voter role.
To be a **proxy** and vote in the SBS, you must have a proxy role.

To register to become a proxy or voter in the SBS:

- Go to 'My User Profile'
- Select 'Click Here' to request additional permissions
- Select 'Voter' or 'Proxy Voter'

Commenting

Use the electronic form to submit comments on the standard(s). If you experience any difficulties in using the electronic form, contact Arielle Cunningham. An off-line, unofficial copy of the comment form is posted on the project page.

Join Ballot Pools

Ballot pools are currently being formed. Registered Ballot Body members must join the ballot pools to be eligible to cast a ballot. Registered Ballot Body members may join the ballot pools here.

NOTE: Initially, separate ballot pools were incorrectly created for PRC-004-5 and PRC-010-2. The SBS has been updated with one ballot pool to combine PRC-004-5 and PRC-010-2. If you have already joined the separate ballot pools, please register in the combined ballot pool.

RSAWs

The draft RSAWs for the standards **PRC-004-5 – Protection System Misoperation Identification and Correction and PRC-010-2 – Under Voltage Load Shedding** are posted on the project page. Submit comments regarding the draft RSAWs to RSAWfeedback@nerc.net**.**

Next Steps

An initial ballot for the standards and a non-binding poll of the associated Violation Risk Factors and Violation Severity Levels will be conducted **March 27 through April 7, 2015.**

For information on the **Standards Development Process**, refer to the Standard Processes Manual.

For more information or assistance, contact Standards Developer, Scott Barfield-McGinnis (via email), or by phone at (404) 446-9689.

North American Electric Reliability Corporation
3353 Peachtree Rd, NE
Suite 600, North Tower
Atlanta, GA 30326
404-446-2560 | www.nerc.com

NERC
NORTH AMERICAN ELECTRIC RELIABILITY CORPORATION

Standards Announcement

Project 2008-02.2 Phase 2 of Undervoltage Load Shedding (UVLS): Misoperations
PRC-004-5 and PRC-010-2

Initial Ballot and Non-Binding Poll Results

Now Available

An initial ballot for **PRC-004-5 – Protection System Misoperation Identification and Correction** and **PRC-010-2 – Under Voltage Load Shedding** and a non-binding poll of the associated Violation Risk Factors and Violation Severity Levels concluded at **8 p.m. Eastern, Tuesday, April 7, 2015**.

The standard achieved a quorum and received sufficient affirmative votes for approval. Voting statistics are listed below, and the Ballot Results page provides a link to the detailed results for the ballot and non-binding poll.

Ballot	Non-Binding Poll
Quorum /Approval	Quorum/Supportive Opinions
79.93% / 84.31%	79.63% / 88.10%

Next Steps

The drafting team will consider all comments received during the formal comment period and, if needed, make revisions to the standard and post it for an additional ballot. If the comments do not show the need for significant revisions, the standard will proceed to a final ballot.

For more information on the **Standards Development Process**, refer to the Standard Processes Manual.

For more information or assistance, contact Standards Developer, Scott Barfield-McGinnis (via email) or at (404) 446-9689.

North American Electric Reliability Corporation
3353 Peachtree Rd, NE
Suite 600, North Tower
Atlanta, GA 30326
404-446-2560 | www.nerc.com

BALLOT RESULTS

Survey: View Survey Results

Ballot Name: 2008-02.2 Phase 2 UVLS PRC-004-5 & PRC-010-2 IN 1 ST
Voting Start Date: 3/27/2015 12:01:00 AM
Voting End Date: 4/7/2015 8:00:00 PM
Ballot Type: ST
Ballot Activity: IN
Ballot Series: 1
Total # Votes: 227
Total Ballot Pool: 284
Quorum: 79.93
Weighted Segment Value: 84.31

Segment	Ballot Pool	Segment Weight	Affirmative Votes	Affirmative Fraction	Negative Votes w/ Comment	Negative Fraction w/ Comment	Negative Votes w/o Comment	Abstain	No Vote
Segment: 1	76	1	29	0.763	9	0.237	1	19	18
Segment: 2	9	0.5	3	0.3	2	0.2	0	0	4
Segment: 3	67	1	32	0.889	4	0.111	0	17	14
Segment: 4	20	1	14	0.875	2	0.125	0	2	2
Segment: 5	60	1	30	0.833	6	0.167	0	13	11
Segment: 6	40	1	23	0.92	2	0.08	0	9	6
Segment:	1	0	0	0	0	0	0	0	1

© 2015 - NERC Ver 1.3.5.9 Machine Name: ERODVSBSWB01

8									
Segment: 9	2	0.1	1	0.1	0	0	0	0	1
Segment: 10	7	0.7	6	0.6	1	0.1	0	0	0
Totals:	284	6.5	140	5.48	26	1.02	1	60	57

BALLOT POOL MEMBERS

Show All entries

Search: Search

Segment	Organization	Voter	Designated Proxy	Ballot	NERC Memo
1	AEP - AEP Service Corporation	paul johnson		Negative	Third-Party Comments
1	Ameren - Ameren Services	Eric Scott		Negative	Third-Party Comments
1	Associated Electric Cooperative, Inc.	Phil Hart		Affirmative	N/A
1	ATCO Electric	David Downey	Dan Bamber	None	N/A
1	Austin Energy	Thomas Standifur		None	N/A
1	Balancing Authority of Northern California	Kevin Smith	Joe Tarantino	Affirmative	N/A
1	Basin Electric Power Cooperative	David Rudolph		None	N/A
1	BC Hydro and Power Authority	Patricia Robertson		None	N/A
1	Beaches Energy	Don Cuevas		Affirmative	N/A

	Services				
1	Berkshire Hathaway Energy - MidAmerican Energy Co.	Terry Harbour		Affirmative	N/A
1	Bonneville Power Administration	Donald Watkins		Affirmative	N/A
1	Brazos Electric Power Cooperative, Inc.	Tony Kroskey		None	N/A
1	Bryan Texas Utilities	John Fontenot		Affirmative	N/A
1	CenterPoint Energy Houston Electric, LLC	John Brockhan		Abstain	N/A
1	Central Electric Power Cooperative (Missouri)	Michael Bax		Abstain	N/A
1	Cleco Corporation	John Lindsey	Louis Guidry	None	N/A
1	Colorado Springs Utilities	Shawna Speer		Affirmative	N/A
1	Con Ed - Consolidated Edison Co. of New York	Chris de Graffenried		Negative	No Comment Submitted
1	CPS Energy	Glenn Pressler		Affirmative	N/A
1	Dairyland Power Cooperative	Robert Roddy		Affirmative	N/A
1	Dominion - Dominion Virginia Power	Larry Nash		Abstain	N/A
1	Duke Energy	Doug Hils		Affirmative	N/A
1	Edison International - Southern California Edison Company	Steven Mavis		Affirmative	N/A
1	Empire District Electric Co.	Ralph Meyer		None	N/A
1	Entergy - Entergy Services, Inc.	Oliver Burke		Negative	Comments Submitted
1	Exelon	Chris Scanlon		Affirmative	N/A
1	FirstEnergy -	William Smith		Affirmative	N/A

	FirstEnergy Corporation				
1	Georgia Transmission Corporation	Jason Snodgrass	Greg Davis	Negative	Third-Party Comments
1	Great Plains Energy - Kansas City Power and Light Co.	Daniel Gibson		Affirmative	N/A
1	Great River Energy	Gordon Pietsch		Negative	Third-Party Comments
1	Hydro One Networks, Inc.	Payam Farahbakhsh		Affirmative	N/A
1	Hydro-Qu?bec TransEnergie	Martin Boisvert		Affirmative	N/A
1	IDACORP - Idaho Power Company	Molly Devine		Negative	Comments Submitted
1	International Transmission Company Holdings Corporation	Michael Moltane		Abstain	N/A
1	KAMO Electric Cooperative	Walter Kenyon		Abstain	N/A
1	Long Island Power Authority	Robert Ganley		None	N/A
1	Los Angeles Department of Water and Power	faranak sarbaz		None	N/A
1	M and A Electric Power Cooperative	William Price		Abstain	N/A
1	Manitoba Hydro	Mike Smith		Affirmative	N/A
1	Minnkota Power Cooperative Inc.	Theresa Allard		Abstain	N/A
1	Muscatine Power and Water	Andy Kurriger		None	N/A
1	N.W. Electric Power Cooperative, Inc.	Mark Ramsey		Abstain	N/A
1	National Grid USA	Michael Jones		Negative	Comments

					Submitted
1	NB Power Corporation	Alan MacNaughton		Abstain	N/A
1	Nebraska Public Power District	Jamison Cawley		Affirmative	N/A
1	NextEra Energy - Florida Power and Light Co.	Mike ONeil		None	N/A
1	NiSource - Northern Indiana Public Service Co.	Julaine Dyke		Abstain	N/A
1	Northeast Missouri Electric Power Cooperative	Kevin White		Abstain	N/A
1	OGE Energy - Oklahoma Gas and Electric Co.	Terri Pyle		Affirmative	N/A
1	Oncor Electric Delivery	Rod Kinard	Gul Khan	Affirmative	N/A
1	PHI - Potomac Electric Power Co.	David Thorne		Abstain	N/A
1	Platte River Power Authority	John Collins		Affirmative	N/A
1	PNM Resources - Public Service Company of New Mexico	Laurie Williams		None	N/A
1	Portland General Electric Co.	John Walker		Abstain	N/A
1	PPL Electric Utilities Corporation	Brenda Truhe		Abstain	N/A
1	PSEG - Public Service Electric and Gas Co.	Joseph Smith		Affirmative	N/A
1	Public Utility District No. 1 of Snohomish County	Long Duong		Affirmative	N/A
1	Public Utility District No. 2 of Grant County,	Michiko Sell		None	N/A

	Washington				
1	Puget Sound Energy, Inc.	Denise Lietz		Negative	Comments Submitted
1	Sacramento Municipal Utility District	Tim Kelley	Joe Tarantino	Affirmative	N/A
1	Santee Cooper	Shawn Abrams		None	N/A
1	SaskPower	Wayne Guttormson		None	N/A
1	SCANA - South Carolina Electric and Gas Co.	Tom Hanzlik		Abstain	N/A
1	Seattle City Light	Pawel Krupa		Affirmative	N/A
1	Seminole Electric Cooperative, Inc.	Mark Churilla	Bret Galbraith	Abstain	N/A
1	Sho-Me Power Electric Cooperative	Denise Stevens		None	N/A
1	Southern Company - Southern Company Services, Inc.	Robert A. Schaffeld		Affirmative	N/A
1	Southwest Transmission Cooperative, Inc.	John Shaver		Negative	Third-Party Comments
1	Tacoma Public Utilities (Tacoma, WA)	John Merrell		Abstain	N/A
1	Tallahassee Electric (City of Tallahassee, FL)	Scott Langston		Abstain	N/A
1	Tennessee Valley Authority	Howell Scott		Affirmative	N/A
1	Tri-State G and T Association, Inc.	Tracy Sliman		Affirmative	N/A
1	U.S. Bureau of Reclamation	Richard Jackson		None	N/A
1	Westar Energy	Kevin Giles		Abstain	N/A
1	Western Area Power Administration	Steve Johnson		None	N/A

1	Xcel Energy, Inc.	Greg Pieper		Affirmative	N/A
2	BC Hydro and Power Authority	Venkataramakrishnan Vinnakota		None	N/A
2	California ISO	Richard Vine		Negative	Comments Submitted
2	Electric Reliability Council of Texas, Inc.	christina bigelow		Affirmative	N/A
2	Herb Schrayshuen	Herb Schrayshuen		Affirmative	N/A
2	Independent Electricity System Operator	Leonard Kula	Mark Wilson	Negative	Comments Submitted
2	ISO New England, Inc.	Matthew Goldberg		None	N/A
2	Midcontinent ISO, Inc.	Terry BIlke		None	N/A
2	New York Independent System Operator	Gregory Campoli		None	N/A
2	PJM Interconnection, L.L.C.	Mark Holman		Affirmative	N/A
3	AEP	Michael DeLoach		None	N/A
3	Ameren - Ameren Services	David Jendras		Negative	Third-Party Comments
3	APS - Arizona Public Service Co.	Sarah Kist		Affirmative	N/A
3	Associated Electric Cooperative, Inc.	Todd Bennett		Abstain	N/A
3	Austin Energy	Lisa Martin		Affirmative	N/A
3	Avista - Avista Corporation	Scott Kinney		Abstain	N/A
3	Basin Electric Power Cooperative	Jeremy Voll		Affirmative	N/A
3	BC Hydro and Power Authority	Pat Harrington		None	N/A
3	Beaches Energy Services	Steven Lancaster		Affirmative	N/A

3	Berkshire Hathaway Energy - MidAmerican Energy Co.	Thomas Mielnik	Darnez Gresham	Affirmative	N/A
3	Bonneville Power Administration	Rebecca Berdahl		Affirmative	N/A
3	Central Electric Power Cooperative (Missouri)	Adam Weber		Abstain	N/A
3	City of Green Cove Springs	Mark Schultz		Affirmative	N/A
3	City of Leesburg	Chris Adkins		Affirmative	N/A
3	City of Redding	Bill Hughes	Mary Downey	Affirmative	N/A
3	City Utilities of Springfield, Missouri	Scott Williams		Abstain	N/A
3	Cleco Corporation	Michelle Corley	Louis Guidry	None	N/A
3	Con Ed - Consolidated Edison Co. of New York	Peter Yost		Affirmative	N/A
3	CPS Energy	Brian Bartos		Affirmative	N/A
3	Dominion - Dominion Resources, Inc.	Connie Lowe		Abstain	N/A
3	Duke Energy	Lee Schuster		Affirmative	N/A
3	Exelon	John Bee		Affirmative	N/A
3	Fayetteville Public Works Commission	Allen Wallace		None	N/A
3	FirstEnergy - FirstEnergy Corporation	Cindy Stewart	Richard Hoag	Affirmative	N/A
3	Florida Municipal Power Agency	Joe McKinney		Affirmative	N/A
3	Georgia System Operations Corporation	Scott McGough		Negative	Third-Party Comments
3	Great Plains Energy - Kansas City Power and Light Co.	Joshua Bach		Affirmative	N/A

3	Great River Energy	Brian Glover		Negative	Third-Party Comments
3	Hydro One Networks, Inc.	Paul Malozewski		Affirmative	N/A
3	Integrys Energy Group, Inc. - Wisconsin Public Service Corporation	Greg LeGrave		None	N/A
3	KAMO Electric Cooperative	Ted Hilmes		Abstain	N/A
3	Lincoln Electric System	Jason Fortik		Abstain	N/A
3	Los Angeles Department of Water and Power	Mike Anctil		None	N/A
3	M and A Electric Power Cooperative	Stephen Pogue		Abstain	N/A
3	Manitoba Hydro	Karim Abdel-Hadi		Affirmative	N/A
3	Modesto Irrigation District	Jack Savage	Nick Braden	Affirmative	N/A
3	Muscatine Power and Water	Seth Shoemaker		Affirmative	N/A
3	National Grid USA	Brian Shanahan		Negative	Comments Submitted
3	Nebraska Public Power District	Tony Eddleman		Affirmative	N/A
3	NiSource - Northern Indiana Public Service Co.	Ramon Barany		Abstain	N/A
3	Northeast Missouri Electric Power Cooperative	Skyler Wiegmann		Abstain	N/A
3	Northeast Utilities	Mark Kenny		None	N/A
3	NW Electric Power Cooperative, Inc.	John Stickley		Abstain	N/A

3	Ocala Utility Services	Randy Hahn		None	N/A
3	OGE Energy - Oklahoma Gas and Electric Co.	Donald Hargrove		Affirmative	N/A
3	Pacific Gas and Electric Company	John Hagen		Affirmative	N/A
3	PHI - Potomac Electric Power Co.	Mark Yerger		Abstain	N/A
3	Platte River Power Authority	Terry Baker		Affirmative	N/A
3	PPL - Louisville Gas and Electric Co.	Charles Freibert		Abstain	N/A
3	PSEG - Public Service Electric and Gas Co.	Jeffrey Mueller		Affirmative	N/A
3	Rutherford EMC	Tom Haire		None	N/A
3	Sacramento Municipal Utility District	Rachel Moore	Joe Tarantino	Affirmative	N/A
3	Salt River Project	John Coggins		None	N/A
3	Santee Cooper	James Poston		None	N/A
3	SCANA - South Carolina Electric and Gas Co.	Clay Young		None	N/A
3	Seattle City Light	Dana Wheelock		Affirmative	N/A
3	Seminole Electric Cooperative, Inc.	James Frauen		Abstain	N/A
3	Sho-Me Power Electric Cooperative	Jeff Neas		None	N/A
3	Snohomish County PUD No. 1	Mark Oens		Affirmative	N/A
3	Southern Company - Alabama Power Company	R. Scott Moore		Affirmative	N/A
3	Tacoma Public Utilities (Tacoma, WA)	Marc Donaldson		Abstain	N/A

3	Tallahassee Electric (City of Tallahassee, FL)	John Williams		Abstain	N/A
3	TECO - Tampa Electric Co.	Ronald Donahey		None	N/A
3	Tennessee Valley Authority	Ian Grant		Affirmative	N/A
3	Tri-State G and T Association, Inc.	Janelle Marriott Gill		Affirmative	N/A
3	Westar Energy	Bo Jones		Abstain	N/A
3	Xcel Energy, Inc.	Michael Ibold		Affirmative	N/A
4	Alliant Energy Corporation Services, Inc.	Kenneth Goldsmith		Affirmative	N/A
4	Austin Energy	Tina Garvey		Affirmative	N/A
4	City of Clewiston	Lynne Mila		Affirmative	N/A
4	City of New Smyrna Beach Utilities Commission	Tim Beyrle		Affirmative	N/A
4	City of Redding	Nick Zettel	Mary Downey	Affirmative	N/A
4	City of Winter Park	Mark Brown		Affirmative	N/A
4	FirstEnergy - Ohio Edison Company	Doug Hohlbaugh		Affirmative	N/A
4	Florida Municipal Power Agency	Carol Chinn		Affirmative	N/A
4	Fort Pierce Utilities Authority	Thomas Parker		None	N/A
4	Georgia System Operations Corporation	Guy Andrews		Negative	Third-Party Comments
4	Illinois Municipal Electric Agency	Bob Thomas		Affirmative	N/A
4	Integrys Energy Group, Inc. - Wisconsin Public	Christopher Plante		Abstain	N/A

	Service Corporation				
4	Keys Energy Services	Stanley Rzad		Affirmative	N/A
4	MGE Energy - Madison Gas and Electric Co.	Joseph DePoorter		Affirmative	N/A
4	Modesto Irrigation District	Spencer Tacke		None	N/A
4	Public Utility District No. 1 of Snohomish County	John Martinsen		Affirmative	N/A
4	Sacramento Municipal Utility District	Michael Ramirez	Joe Tarantino	Affirmative	N/A
4	Seattle City Light	Hao Li		Affirmative	N/A
4	Tacoma Public Utilities (Tacoma, WA)	Keith Morisette		Abstain	N/A
4	Utility Services, Inc.	Brian Evans-Mongeon		Negative	Third-Party Comments
5	AEP	Thomas Foltz		Negative	Comments Submitted
5	Ameren - Ameren Missouri	Sam Dwyer		Negative	Third-Party Comments
5	APS - Arizona Public Service Co.	Scott Takinen		Affirmative	N/A
5	Associated Electric Cooperative, Inc.	Matthew Pacobit		Abstain	N/A
5	Austin Energy	Jeanie Doty		Affirmative	N/A
5	Basin Electric Power Cooperative	Mike Kraft		Affirmative	N/A
5	Black Hills Corporation	George Tatar		Abstain	N/A
5	Boise-Kuna Irrigation District - Lucky Peak Power Plant Project	Mike Kukla		Affirmative	N/A
5	Bonneville Power Administration	Francis Halpin		Affirmative	N/A

5	Brazos Electric Power Cooperative, Inc.	Shari Heino		Negative	Comments Submitted
5	Choctaw Generation Limited Partnership, LLLP	Rob Watson		None	N/A
5	City of Independence, Power and Light Department	Jim Nail		Affirmative	N/A
5	Cleco Corporation	Stephanie Huffman	Louis Guidry	None	N/A
5	CMS Energy - Consumers Energy Company	David Greyerbiehl		Affirmative	N/A
5	Colorado Springs Utilities	Kaleb Brimhall		Affirmative	N/A
5	Con Ed - Consolidated Edison Co. of New York	Brian O'Boyle		Affirmative	N/A
5	Dairyland Power Cooperative	Tommy Drea		Affirmative	N/A
5	Dominion - Dominion Resources, Inc.	Randi Heise		Abstain	N/A
5	DTE Energy - Detroit Edison Company	Jeffrey DePriest		Affirmative	N/A
5	Duke Energy	Dale Goodwine		Affirmative	N/A
5	Dynegy Inc.	Dan Roethemeyer		Abstain	N/A
5	Exelon	Vince Catania		Affirmative	N/A
5	FirstEnergy - FirstEnergy Solutions	Robert Loy		Affirmative	N/A
5	Florida Municipal Power Agency	David Schumann		Affirmative	N/A
5	Golden Spread Electric Cooperative, Inc.	Chip Koloini		None	N/A
5	Great Plains Energy - Kansas City Power and Light Co.	Brett Holland		None	N/A

5	Great River Energy	Preston Walsh		Negative	Third-Party Comments
5	Hydro-Qu?bec Production	Roger Dufresne		Abstain	N/A
5	Integrys Energy Group, Inc. - Wisconsin Public Service Corporation	Scott Johnson		Abstain	N/A
5	JEA	John Babik		Abstain	N/A
5	Kissimmee Utility Authority	Mike Blough		Affirmative	N/A
5	Lakeland Electric	Jim Howard		Affirmative	N/A
5	Liberty Electric Power LLC	Daniel Duff		None	N/A
5	Lincoln Electric System	Kayleigh Wilkerson		Abstain	N/A
5	Lower Colorado River Authority	Dixie Wells		Affirmative	N/A
5	Luminant - Luminant Generation Company LLC	Rick Terrill		None	N/A
5	Manitoba Hydro	Yuguang Xiao		Affirmative	N/A
5	Massachusetts Municipal Wholesale Electric Company	David Gordon		Abstain	N/A
5	Muscatine Power and Water	Mike Avesing		Affirmative	N/A
5	Nebraska Public Power District	Don Schmit		Affirmative	N/A
5	NiSource - Northern Indiana Public Service Co.	Michael Melvin		Abstain	N/A
5	OGE Energy - Oklahoma Gas and Electric Co.	Leo Staples		Affirmative	N/A

5	Oglethorpe Power Corporation	Bernard Johnson		Negative	Third-Party Comments
5	Omaha Public Power District	Mahmood Safi		Affirmative	N/A
5	Pacific Gas and Electric Company	Alex Chua		None	N/A
5	Platte River Power Authority	Christopher Wood		Affirmative	N/A
5	Public Utility District No. 1 of Snohomish County	Sam Nietfeld		Affirmative	N/A
5	Puget Sound Energy, Inc.	Lynda Kupfer		Negative	Comments Submitted
5	Sacramento Municipal Utility District	Susan Gill-Zobitz	Joe Tarantino	Affirmative	N/A
5	Salt River Project	Kevin Nielsen		None	N/A
5	SCANA - South Carolina Electric and Gas Co.	Edward Magic		None	N/A
5	Seattle City Light	Mike Haynes		Affirmative	N/A
5	Southern Company - Southern Company Generation	William D. Shultz		Affirmative	N/A
5	Tacoma Public Utilities (Tacoma, WA)	Chris Mattson		Abstain	N/A
5	Tallahassee Electric (City of Tallahassee, FL)	Karen Webb		Abstain	N/A
5	TECO - Tampa Electric Co.	R James Rocha		None	N/A
5	Tennessee Valley Authority	Brandy Spraker		Affirmative	N/A
5	U.S. Bureau of Reclamation	Erika Doot		None	N/A
5	Westar Energy	stephanie johnson		Abstain	N/A

5	Xcel Energy, Inc.	Mark Castagneri		Affirmative	N/A
6	AEP - AEP Marketing	Edward P Cox		Negative	Third-Party Comments
6	Ameren - Ameren Services	Robert Quinlivan		Negative	Third-Party Comments
6	APS - Arizona Public Service Co.	Randy Young		Affirmative	N/A
6	Associated Electric Cooperative, Inc.	Brian Ackermann		Abstain	N/A
6	Austin Energy	Andrew Gallo		Affirmative	N/A
6	Berkshire Hathaway - PacifiCorp	Sandra Shaffer		Affirmative	N/A
6	Bonneville Power Administration	Brenda Anderson		Affirmative	N/A
6	City of Redding	Marvin Briggs	Mary Downey	Affirmative	N/A
6	Cleco Corporation	Robert Hirchak	Louis Guidry	None	N/A
6	Colorado Springs Utilities	Shannon Fair		Affirmative	N/A
6	Con Ed - Consolidated Edison Co. of New York	Robert Winston		Affirmative	N/A
6	Dominion - Dominion Resources, Inc.	Louis Slade		Abstain	N/A
6	Duke Energy	Greg Cecil		Affirmative	N/A
6	Exelon	Dave Carlson		Affirmative	N/A
6	FirstEnergy - FirstEnergy Solutions	Ann Ivanc		Affirmative	N/A
6	Florida Municipal Power Agency	Richard Montgomery		Affirmative	N/A
6	Florida Municipal Power Pool	Tom Reedy		None	N/A
6	Great River Energy	Donna Stephenson		None	N/A
6	Lincoln Electric	Eric Ruskamp		Abstain	N/A

	System				
6	Lower Colorado River Authority	Michael Shaw		Affirmative	N/A
6	Luminant - Luminant Energy	Brenda Hampton		Abstain	N/A
6	Manitoba Hydro	Blair Mukanik		Affirmative	N/A
6	Modesto Irrigation District	James McFall	Nick Braden	Affirmative	N/A
6	NextEra Energy - Florida Power and Light Co.	Silvia Mitchell		None	N/A
6	NiSource - Northern Indiana Public Service Co.	Joe O'Brien		Abstain	N/A
6	OGE Energy - Oklahoma Gas and Electric Co.	Jerry Nottnagel		None	N/A
6	Oglethorpe Power Corporation	Donna Johnson		None	N/A
6	Platte River Power Authority	Carol Ballantine		Affirmative	N/A
6	Portland General Electric Co.	Shawn Davis		Abstain	N/A
6	PSEG - PSEG Energy Resources and Trade LLC	Stephen York		Affirmative	N/A
6	Sacramento Municipal Utility District	Diane Clark	Joe Tarantino	Affirmative	N/A
6	Salt River Project	William Abraham		Affirmative	N/A
6	Seattle City Light	Dennis Sismaet		Affirmative	N/A
6	Seminole Electric Cooperative, Inc.	Trudy Novak		Abstain	N/A
6	Snohomish County PUD No. 1	Kenn Backholm		Affirmative	N/A
6	Southern Company -	John J. Ciza		Affirmative	N/A

	Southern Company Generation and Energy Marketing				
6	Tacoma Public Utilities (Tacoma, WA)	Rick Applegate		Abstain	N/A
6	Tennessee Valley Authority	Marjorie Parsons		Affirmative	N/A
6	Westar Energy	Tiffany Lake		Abstain	N/A
6	Xcel Energy, Inc.	Peter Colussy		Affirmative	N/A
7	Siemens - Siemens PTI	Frank McElvain		None	N/A
8	David Kiguel	David Kiguel		Affirmative	N/A
8	Massachusetts Attorney General	Frederick Plett		Affirmative	N/A
9	City of Vero Beach	Ginny Beigel		Affirmative	N/A
9	National Association of Regulatory Utility Commissioners	Jerry Maio		None	N/A
10	Florida Reliability Coordinating Council	Peter Heidrich		Affirmative	N/A
10	Midwest Reliability Organization	Russel Mountjoy		Affirmative	N/A
10	Northeast Power Coordinating Council	Guy V. Zito		Affirmative	N/A
10	ReliabilityFirst	Anthony Jablonski		Affirmative	N/A
10	Southwest Power Pool Regional Entity	Bob Reynolds		Affirmative	N/A
10	Texas Reliability Entity, Inc.	Rachel Coyne		Negative	Comments Submitted
10	Western Electricity Coordinating Council	Steven Rueckert		Affirmative	N/A

Previous 1 Next

Showing 1 to 284 of 284 entries

BALLOT RESULTS

Ballot Name: 2008-02.2 Phase 2 UVLS PRC-004-5 & PRC-010-2 Non-Binding Poll IN 1 NB
Voting Start Date: 3/27/2015 12:01:00 AM
Voting End Date: 4/7/2015 8:00:00 PM
Ballot Type: NB
Ballot Activity: IN
Ballot Series: 1
Total # Votes: 215
Total Ballot Pool: 270
Quorum: 79.63
Weighted Segment Value: 88.1

Segment	Ballot Pool	Segment Weight	Affirmative Votes	Affirmative Fraction	Negative Votes w/ Comment	Negative Fraction w/ Comment	Negative Votes w/o Comment	Abstain	No Vote
Segment: 1	73	1	23	0.767	7	0.233	0	25	18
Segment: 2	9	0.5	4	0.4	1	0.1	0	0	4
Segment: 3	63	1	24	0.889	3	0.111	0	23	13
Segment: 4	17	1	10	0.909	1	0.091	0	5	1
Segment: 5	60	1	26	0.897	3	0.103	0	20	11
Segment: 6	37	1	17	1	0	0	0	14	6
Segment: 7	1	0	0	0	0	0	0	0	1

© 2015 - NERC Ver 1.3.5.9 Machine Name: ERODVSBSWB01

Segment: 9	2	0.1	1	0.1	0	0	0	0	1
Segment: 10	6	0.4	3	0.3	1	0.1	0	2	0
Totals:	270	6.2	110	5.462	16	0.738	0	89	55

BALLOT POOL MEMBERS

Show All entries

Search: Search

Segment	Organization	Voter	Designated Proxy	Ballot	NERC Memo
1	AEP - AEP Service Corporation	paul johnson		Abstain	N/A
1	Ameren - Ameren Services	Eric Scott		Abstain	N/A
1	Associated Electric Cooperative, Inc.	Phil Hart		Affirmative	N/A
1	ATCO Electric	David Downey	Dan Bamber	None	N/A
1	Austin Energy	Thomas Standifur		None	N/A
1	Balancing Authority of Northern California	Kevin Smith	Joe Tarantino	Affirmative	N/A
1	Basin Electric Power Cooperative	David Rudolph		None	N/A
1	BC Hydro and Power Authority	Patricia Robertson		None	N/A
1	Beaches Energy Services	Don Cuevas		Affirmative	N/A

1	Berkshire Hathaway Energy - MidAmerican Energy Co.	Terry Harbour		Affirmative	N/A
1	Bonneville Power Administration	Donald Watkins		Affirmative	N/A
1	Brazos Electric Power Cooperative, Inc.	Tony Kroskey		None	N/A
1	Bryan Texas Utilities	John Fontenot		Affirmative	N/A
1	CenterPoint Energy Houston Electric, LLC	John Brockhan		Abstain	N/A
1	Central Electric Power Cooperative (Missouri)	Michael Bax		Abstain	N/A
1	Cleco Corporation	John Lindsey	Louis Guidry	None	N/A
1	Colorado Springs Utilities	Shawna Speer		Affirmative	N/A
1	Con Ed - Consolidated Edison Co. of New York	Chris de Graffenried		Affirmative	N/A
1	CPS Energy	Glenn Pressler		Affirmative	N/A
1	Dairyland Power Cooperative	Robert Roddy		Affirmative	N/A
1	Dominion - Dominion Virginia Power	Larry Nash		Abstain	N/A
1	Duke Energy	Doug Hils		Affirmative	N/A
1	Edison International - Southern California Edison Company	Steven Mavis		Affirmative	N/A
1	Empire District Electric Co.	Ralph Meyer		None	N/A
1	Entergy - Entergy Services, Inc.	Oliver Burke		Negative	Third-Party Comments
1	Exelon	Chris Scanlon		Abstain	N/A
1	FirstEnergy - FirstEnergy Corporation	William Smith		Affirmative	N/A

1	Georgia Transmission Corporation	Jason Snodgrass	Greg Davis	Negative	Third-Party Comments
1	Great Plains Energy - Kansas City Power and Light Co.	Daniel Gibson		Abstain	N/A
1	Great River Energy	Gordon Pietsch		Negative	Third-Party Comments
1	Hydro One Networks, Inc.	Payam Farahbakhsh		Affirmative	N/A
1	Hydro-Qu?bec TransEnergie	Martin Boisvert		Affirmative	N/A
1	IDACORP - Idaho Power Company	Molly Devine		Negative	Third-Party Comments
1	International Transmission Company Holdings Corporation	Michael Moltane		Abstain	N/A
1	KAMO Electric Cooperative	Walter Kenyon		Abstain	N/A
1	Long Island Power Authority	Robert Ganley		None	N/A
1	Los Angeles Department of Water and Power	faranak sarbaz		None	N/A
1	M and A Electric Power Cooperative	William Price		Abstain	N/A
1	Manitoba Hydro	Mike Smith		Affirmative	N/A
1	Minnkota Power Cooperative Inc.	Theresa Allard		Abstain	N/A
1	Muscatine Power and Water	Andy Kurriger		None	N/A
1	N.W. Electric Power Cooperative, Inc.	Mark Ramsey		Abstain	N/A
1	National Grid USA	Michael Jones		Negative	Comments Submitted

1	Nebraska Public Power District	Jamison Cawley		Abstain	N/A
1	NextEra Energy - Florida Power and Light Co.	Mike ONeil		None	N/A
1	NiSource - Northern Indiana Public Service Co.	Julaine Dyke		Abstain	N/A
1	Northeast Missouri Electric Power Cooperative	Kevin White		Abstain	N/A
1	OGE Energy - Oklahoma Gas and Electric Co.	Terri Pyle		Affirmative	N/A
1	Oncor Electric Delivery	Rod Kinard	Gul Khan	Affirmative	N/A
1	Platte River Power Authority	John Collins		Abstain	N/A
1	PNM Resources - Public Service Company of New Mexico	Laurie Williams		None	N/A
1	Portland General Electric Co.	John Walker		Abstain	N/A
1	PPL Electric Utilities Corporation	Brenda Truhe		Abstain	N/A
1	PSEG - Public Service Electric and Gas Co.	Joseph Smith		Abstain	N/A
1	Public Utility District No. 1 of Snohomish County	Long Duong		Affirmative	N/A
1	Public Utility District No. 2 of Grant County, Washington	Michiko Sell		None	N/A
1	Puget Sound Energy, Inc.	Denise Lietz		Negative	Third-Party Comments
1	Sacramento Municipal Utility District	Tim Kelley	Joe Tarantino	Affirmative	N/A

1	Santee Cooper	Shawn Abrams		None	N/A
1	SaskPower	Wayne Guttormson		None	N/A
1	SCANA - South Carolina Electric and Gas Co.	Tom Hanzlik		Abstain	N/A
1	Seattle City Light	Pawel Krupa		Affirmative	N/A
1	Seminole Electric Cooperative, Inc.	Mark Churilla	Bret Galbraith	Abstain	N/A
1	Sho-Me Power Electric Cooperative	Denise Stevens		None	N/A
1	Southern Company - Southern Company Services, Inc.	Robert A. Schaffeld		Affirmative	N/A
1	Southwest Transmission Cooperative, Inc.	John Shaver		Negative	Third-Party Comments
1	Tacoma Public Utilities (Tacoma, WA)	John Merrell		Abstain	N/A
1	Tallahassee Electric (City of Tallahassee, FL)	Scott Langston		Abstain	N/A
1	Tennessee Valley Authority	Howell Scott		Abstain	N/A
1	Tri-State G and T Association, Inc.	Tracy Sliman		Affirmative	N/A
1	U.S. Bureau of Reclamation	Richard Jackson		None	N/A
1	Westar Energy	Kevin Giles		Abstain	N/A
1	Western Area Power Administration	Steve Johnson		None	N/A
2	BC Hydro and Power Authority	Venkataramakrishnan Vinnakota		None	N/A
2	California ISO	Richard Vine		Negative	Comments Submitted

2	Electric Reliability Council of Texas, Inc.	christina bigelow		Affirmative	N/A
2	Herb Schrayshuen	Herb Schrayshuen		Affirmative	N/A
2	Independent Electricity System Operator	Leonard Kula	Mark Wilson	Affirmative	N/A
2	ISO New England, Inc.	Matthew Goldberg		None	N/A
2	Midcontinent ISO, Inc.	Terry BIlke		None	N/A
2	New York Independent System Operator	Gregory Campoli		None	N/A
2	PJM Interconnection, L.L.C.	Mark Holman		Affirmative	N/A
3	AEP	Michael DeLoach		None	N/A
3	Ameren - Ameren Services	David Jendras		Abstain	N/A
3	APS - Arizona Public Service Co.	Sarah Kist		Affirmative	N/A
3	Associated Electric Cooperative, Inc.	Todd Bennett		Abstain	N/A
3	Austin Energy	Lisa Martin		Affirmative	N/A
3	Avista - Avista Corporation	Scott Kinney		Abstain	N/A
3	Basin Electric Power Cooperative	Jeremy Voll		Affirmative	N/A
3	BC Hydro and Power Authority	Pat Harrington		None	N/A
3	Beaches Energy Services	Steven Lancaster		Affirmative	N/A
3	Berkshire Hathaway Energy - MidAmerican Energy Co.	Thomas Mielnik	Darnez Gresham	Affirmative	N/A
3	Bonneville Power Administration	Rebecca Berdahl		Affirmative	N/A
3	Central Electric Power Cooperative (Missouri)	Adam Weber		Abstain	N/A

3	City of Green Cove Springs	Mark Schultz		Affirmative	N/A
3	City of Leesburg	Chris Adkins		Affirmative	N/A
3	City Utilities of Springfield, Missouri	Scott Williams		Abstain	N/A
3	Cleco Corporation	Michelle Corley	Louis Guidry	None	N/A
3	Con Ed - Consolidated Edison Co. of New York	Peter Yost		Affirmative	N/A
3	CPS Energy	Brian Bartos		Abstain	N/A
3	Dominion - Dominion Resources, Inc.	Connie Lowe		Abstain	N/A
3	Duke Energy	Lee Schuster		Affirmative	N/A
3	Exelon	John Bee		Abstain	N/A
3	FirstEnergy - FirstEnergy Corporation	Cindy Stewart	Richard Hoag	Affirmative	N/A
3	Florida Municipal Power Agency	Joe McKinney		Affirmative	N/A
3	Georgia System Operations Corporation	Scott McGough		Negative	Third-Party Comments
3	Great Plains Energy - Kansas City Power and Light Co.	Joshua Bach		Affirmative	N/A
3	Great River Energy	Brian Glover		Negative	Third-Party Comments
3	Hydro One Networks, Inc.	Paul Malozewski		Affirmative	N/A
3	KAMO Electric Cooperative	Ted Hilmes		Abstain	N/A
3	Lincoln Electric System	Jason Fortik		Abstain	N/A
3	Los Angeles	Mike Anctil		None	N/A

	Department of Water and Power				
3	M and A Electric Power Cooperative	Stephen Pogue		Abstain	N/A
3	Manitoba Hydro	Karim Abdel-Hadi		Affirmative	N/A
3	Modesto Irrigation District	Jack Savage	Nick Braden	Affirmative	N/A
3	Muscatine Power and Water	Seth Shoemaker		Affirmative	N/A
3	National Grid USA	Brian Shanahan		Negative	Comments Submitted
3	Nebraska Public Power District	Tony Eddleman		Abstain	N/A
3	NiSource - Northern Indiana Public Service Co.	Ramon Barany		Abstain	N/A
3	Northeast Missouri Electric Power Cooperative	Skyler Wiegmann		Abstain	N/A
3	Northeast Utilities	Mark Kenny		None	N/A
3	NW Electric Power Cooperative, Inc.	John Stickley		Abstain	N/A
3	Ocala Utility Services	Randy Hahn		None	N/A
3	OGE Energy - Oklahoma Gas and Electric Co.	Donald Hargrove		Affirmative	N/A
3	Pacific Gas and Electric Company	John Hagen		Affirmative	N/A
3	Platte River Power Authority	Terry Baker		Abstain	N/A
3	PPL - Louisville Gas and Electric Co.	Charles Freibert		None	N/A
3	PSEG - Public Service Electric and Gas Co.	Jeffrey Mueller		Abstain	N/A
3	Rutherford EMC	Tom Haire		None	N/A

3	Sacramento Municipal Utility District	Rachel Moore	Joe Tarantino	Affirmative	N/A
3	Salt River Project	John Coggins		None	N/A
3	Santee Cooper	James Poston		None	N/A
3	SCANA - South Carolina Electric and Gas Co.	Clay Young		None	N/A
3	Seattle City Light	Dana Wheelock		Affirmative	N/A
3	Seminole Electric Cooperative, Inc.	James Frauen		Abstain	N/A
3	Sho-Me Power Electric Cooperative	Jeff Neas		None	N/A
3	Snohomish County PUD No. 1	Mark Oens		Affirmative	N/A
3	Southern Company - Alabama Power Company	R. Scott Moore		Affirmative	N/A
3	Tacoma Public Utilities (Tacoma, WA)	Marc Donaldson		Abstain	N/A
3	Tallahassee Electric (City of Tallahassee, FL)	John Williams		Abstain	N/A
3	TECO - Tampa Electric Co.	Ronald Donahey		None	N/A
3	Tennessee Valley Authority	Ian Grant		Abstain	N/A
3	Tri-State G and T Association, Inc.	Janelle Marriott Gill		Affirmative	N/A
3	Westar Energy	Bo Jones		Abstain	N/A
3	Xcel Energy, Inc.	Michael Ibold		Abstain	N/A
4	Alliant Energy Corporation Services, Inc.	Kenneth Goldsmith		Affirmative	N/A
4	Austin Energy	Tina Garvey		Affirmative	N/A

4	City of Clewiston	Lynne Mila		Affirmative	N/A
4	City of New Smyrna Beach Utilities Commission	Tim Beyrle		Affirmative	N/A
4	City of Winter Park	Mark Brown		Affirmative	N/A
4	FirstEnergy - Ohio Edison Company	Doug Hohlbaugh		Affirmative	N/A
4	Florida Municipal Power Agency	Carol Chinn		Affirmative	N/A
4	Fort Pierce Utilities Authority	Thomas Parker		None	N/A
4	Georgia System Operations Corporation	Guy Andrews		Negative	Third-Party Comments
4	Illinois Municipal Electric Agency	Bob Thomas		Abstain	N/A
4	Integrys Energy Group, Inc. - Wisconsin Public Service Corporation	Christopher Plante		Abstain	N/A
4	Keys Energy Services	Stanley Rzad		Affirmative	N/A
4	Public Utility District No. 1 of Snohomish County	John Martinsen		Affirmative	N/A
4	Sacramento Municipal Utility District	Michael Ramirez	Joe Tarantino	Affirmative	N/A
4	Seattle City Light	Hao Li		Abstain	N/A
4	Tacoma Public Utilities (Tacoma, WA)	Keith Morisette		Abstain	N/A
4	Utility Services, Inc.	Brian Evans-Mongeon		Abstain	N/A
5	AEP	Thomas Foltz		Abstain	N/A
5	Ameren - Ameren Missouri	Sam Dwyer		Abstain	N/A
5	APS - Arizona Public	Scott Takinen		Affirmative	N/A

	Service Co.				
5	Associated Electric Cooperative, Inc.	Matthew Pacobit		Abstain	N/A
5	Austin Energy	Jeanie Doty		Affirmative	N/A
5	Basin Electric Power Cooperative	Mike Kraft		Affirmative	N/A
5	Black Hills Corporation	George Tatar		Abstain	N/A
5	Boise-Kuna Irrigation District - Lucky Peak Power Plant Project	Mike Kukla		Affirmative	N/A
5	Bonneville Power Administration	Francis Halpin		Affirmative	N/A
5	Brazos Electric Power Cooperative, Inc.	Shari Heino		Negative	Third-Party Comments
5	Choctaw Generation Limited Partnership, LLLP	Rob Watson		Affirmative	N/A
5	City of Independence, Power and Light Department	Jim Nail		Abstain	N/A
5	Cleco Corporation	Stephanie Huffman	Louis Guidry	None	N/A
5	CMS Energy - Consumers Energy Company	David Greyerbiehl		Affirmative	N/A
5	Colorado Springs Utilities	Kaleb Brimhall		Affirmative	N/A
5	Con Ed - Consolidated Edison Co. of New York	Brian O'Boyle		Affirmative	N/A
5	Dairyland Power Cooperative	Tommy Drea		Affirmative	N/A
5	Dominion - Dominion Resources, Inc.	Randi Heise		Abstain	N/A
5	DTE Energy - Detroit Edison Company	Jeffrey DePriest		Affirmative	N/A

5	Duke Energy	Dale Goodwine		Affirmative	N/A
5	Dynegy Inc.	Dan Roethemeyer		Abstain	N/A
5	Exelon	Vince Catania		Abstain	N/A
5	FirstEnergy - FirstEnergy Solutions	Robert Loy		Affirmative	N/A
5	Florida Municipal Power Agency	David Schumann		Affirmative	N/A
5	Golden Spread Electric Cooperative, Inc.	Chip Koloini		None	N/A
5	Great Plains Energy - Kansas City Power and Light Co.	Brett Holland		None	N/A
5	Great River Energy	Preston Walsh		Negative	Third-Party Comments
5	Hydro-Qu?bec Production	Roger Dufresne		Abstain	N/A
5	Integrys Energy Group, Inc. - Wisconsin Public Service Corporation	Scott Johnson		Abstain	N/A
5	JEA	John Babik		Abstain	N/A
5	Kissimmee Utility Authority	Mike Blough		Affirmative	N/A
5	Lakeland Electric	Jim Howard		Affirmative	N/A
5	Liberty Electric Power LLC	Daniel Duff		None	N/A
5	Lincoln Electric System	Kayleigh Wilkerson		Abstain	N/A
5	Lower Colorado River Authority	Dixie Wells		Affirmative	N/A
5	Luminant - Luminant Generation Company LLC	Rick Terrill		None	N/A
5	Manitoba Hydro	Yuguang Xiao		Affirmative	N/A

5	Massachusetts Municipal Wholesale Electric Company	David Gordon		Abstain	N/A
5	Muscatine Power and Water	Mike Avesing		Affirmative	N/A
5	Nebraska Public Power District	Don Schmit		Abstain	N/A
5	NiSource - Northern Indiana Public Service Co.	Michael Melvin		Abstain	N/A
5	OGE Energy - Oklahoma Gas and Electric Co.	Leo Staples		Affirmative	N/A
5	Oglethorpe Power Corporation	Bernard Johnson		None	N/A
5	Omaha Public Power District	Mahmood Safi		Affirmative	N/A
5	Pacific Gas and Electric Company	Alex Chua		None	N/A
5	Platte River Power Authority	Christopher Wood		Abstain	N/A
5	Public Utility District No. 1 of Snohomish County	Sam Nietfeld		Affirmative	N/A
5	Puget Sound Energy, Inc.	Lynda Kupfer		Negative	Third-Party Comments
5	Sacramento Municipal Utility District	Susan Gill-Zobitz	Joe Tarantino	Affirmative	N/A
5	Salt River Project	Kevin Nielsen		None	N/A
5	SCANA - South Carolina Electric and Gas Co.	Edward Magic		None	N/A
5	Seattle City Light	Mike Haynes		Affirmative	N/A
5	Southern Company - Southern Company	William D. Shultz		Affirmative	N/A

	Generation				
5	Tacoma Public Utilities (Tacoma, WA)	Chris Mattson		Abstain	N/A
5	Tallahassee Electric (City of Tallahassee, FL)	Karen Webb		Abstain	N/A
5	TECO - Tampa Electric Co.	R James Rocha		None	N/A
5	Tennessee Valley Authority	Brandy Spraker		Abstain	N/A
5	U.S. Bureau of Reclamation	Erika Doot		None	N/A
5	Westar Energy	stephanie johnson		Abstain	N/A
5	Xcel Energy, Inc.	Mark Castagneri		Affirmative	N/A
6	AEP - AEP Marketing	Edward P Cox		Abstain	N/A
6	Ameren - Ameren Services	Robert Quinlivan		Abstain	N/A
6	APS - Arizona Public Service Co.	Randy Young		Affirmative	N/A
6	Associated Electric Cooperative, Inc.	Brian Ackermann		Abstain	N/A
6	Austin Energy	Andrew Gallo		Affirmative	N/A
6	Berkshire Hathaway - PacifiCorp	Sandra Shaffer		Affirmative	N/A
6	Bonneville Power Administration	Brenda Anderson		Affirmative	N/A
6	Cleco Corporation	Robert Hirchak	Louis Guidry	None	N/A
6	Colorado Springs Utilities	Shannon Fair		Affirmative	N/A
6	Con Ed - Consolidated Edison Co. of New York	Robert Winston		Affirmative	N/A
6	Duke Energy	Greg Cecil		Affirmative	N/A

6	Exelon	Dave Carlson		Abstain	N/A
6	FirstEnergy - FirstEnergy Solutions	Ann Ivanc		Affirmative	N/A
6	Florida Municipal Power Agency	Richard Montgomery		Affirmative	N/A
6	Florida Municipal Power Pool	Tom Reedy		None	N/A
6	Great River Energy	Donna Stephenson		None	N/A
6	Lincoln Electric System	Eric Ruskamp		Abstain	N/A
6	Lower Colorado River Authority	Michael Shaw		Affirmative	N/A
6	Luminant - Luminant Energy	Brenda Hampton		Abstain	N/A
6	Manitoba Hydro	Blair Mukanik		Affirmative	N/A
6	Modesto Irrigation District	James McFall	Nick Braden	Affirmative	N/A
6	NextEra Energy - Florida Power and Light Co.	Silvia Mitchell		None	N/A
6	NiSource - Northern Indiana Public Service Co.	Joe O'Brien		Abstain	N/A
6	OGE Energy - Oklahoma Gas and Electric Co.	Jerry Nottnagel		None	N/A
6	Oglethorpe Power Corporation	Donna Johnson		None	N/A
6	Platte River Power Authority	Carol Ballantine		Abstain	N/A
6	Portland General Electric Co.	Shawn Davis		Abstain	N/A
6	PSEG - PSEG Energy Resources and Trade LLC	Stephen York		Abstain	N/A

6	Sacramento Municipal Utility District	Diane Clark	Joe Tarantino	Affirmative	N/A
6	Salt River Project	William Abraham		Affirmative	N/A
6	Seattle City Light	Dennis Sismaet		Affirmative	N/A
6	Seminole Electric Cooperative, Inc.	Trudy Novak		Abstain	N/A
6	Snohomish County PUD No. 1	Kenn Backholm		Affirmative	N/A
6	Southern Company - Southern Company Generation and Energy Marketing	John J. Ciza		Affirmative	N/A
6	Tacoma Public Utilities (Tacoma, WA)	Rick Applegate		Abstain	N/A
6	Tennessee Valley Authority	Marjorie Parsons		Abstain	N/A
6	Westar Energy	Tiffany Lake		Abstain	N/A
7	Siemens - Siemens PTI	Frank McElvain		None	N/A
8	David Kiguel	David Kiguel		Affirmative	N/A
8	Massachusetts Attorney General	Frederick Plett		Affirmative	N/A
9	City of Vero Beach	Ginny Beigel		Affirmative	N/A
9	National Association of Regulatory Utility Commissioners	Jerry Maio		None	N/A
10	Florida Reliability Coordinating Council	Peter Heidrich		Affirmative	N/A
10	Northeast Power Coordinating Council	Guy V. Zito		Affirmative	N/A
10	ReliabilityFirst	Anthony Jablonski		Affirmative	N/A
10	Southwest Power Pool Regional Entity	Bob Reynolds		Abstain	N/A
10	Texas Reliability	Rachel Coyne		Negative	Comments

	Entity, Inc.				Submitted
10	Western Electricity Coordinating Council	Steven Rueckert		Abstain	N/A

Previous 1 Next

Showing 1 to 270 of 270 entries

NERC
NORTH AMERICAN ELECTRIC RELIABILITY CORPORATION

Consideration of Comments

Project Name: 2008-02.2 Phase 2 UVLS PRC-004-5 & PRC-010-5

Comment Period Start Date: 2/20/2015

Comment Period End Date: 4/8/2015

Associated Ballots: 2008-02.2 Phase 2 UVLS PRC-004-5 & PRC-010-2 IN 1 ST

If you feel that you comment has been overlooked, please let us know immediately. Our goal is to give every comment serious consideration in this process. If you feel there has been an error or omission, you can contact the Senior Director of Standards, Valerie Agnew (via email) or at (404) 446-2566.

Summary of Changes

The introductory section of both PRC-004-5 and PRC-010-2 standards were updated. The Development Step Completed and Description of Current Draft were updated. The Project Development Background received three clarifying edits and in PRC-010-2, a missing footnote was added and the reference to R5 was corrected to R4. Other cosmetic cleanup was performed to bring the standard into conformity with the NERC style guide.

Both Implementation Plans were clarified in the General Considerations to better explain the two standard going forward together.

The project Mapping Document was augmented to demonstrate how PRC-004-5 addresses the Corrective Action Plan provision from the retired PRC-022-1 in the first phase of the project.

Summary:
There were at least three comments that raised issues that were related to the work the standard drafting team (SDT) completed during the development of PRC-010-1. The SDT was unable to address the comment because it was beyond the scope of work. At least two commenters noted that either the proposed PRC-010-1, Requirement R4, Part 4.2 or PRC-004-5, Applicability 4.2.3 was unnecessary. The SDT did not make a change, but rather explained the rationale why both are important to reliability. There were about three questions about the perceived overlap of PRC-004-5 and PRC-010-1 and the timing differences. The SDT did not make any changes, but explained the intent between the two standards and the reason that there are two different time periods. One commenter suggested allowing an additional 12 months for implementation. The SDT believed that was unnecessary because the UVLS changes do not represent a significant burden to industry and only impact a few entities. Last, there were at least two comments that the PRC-004-5 applicability was meaningless because radial lines would not be Bulk Electric System (BES) Elements. The SDT added the provision in PRC-004-5 to cover the few BES UVLS relays currently applied in some systems across North America as well as cover any future changes that could occur to the BES definition.

1. ***Do you agree that the Misoperation identification and correction of UVLS equipment as retired by PRC-022-1, Requirements R1 and R1.5 is addressed by the proposed revisions of PRC-004-5 and PRC-010-2?***

   If not, please provide comments and suggestions to improve clarity.

John Fontenot - Bryan Texas Utilities - 1 -

Selected Answer: Yes

Answer Comment:

Response:

Likes: 0

Dislikes: 0

Ken Lindberg - Bryan Texas Utilities - 5 - TRE

Selected Answer: Yes

Answer Comment:

Response:

Likes: 0

Dislikes: 0

Glenn Pressler - CPS Energy - 1 -

Selected Answer:

Answer Comment:

Response:

Likes: 0

Dislikes: 0

John Williams - Tallahassee Electric (City of Tallahassee, FL) - 3 -

Selected Answer:

Answer Comment:

Response:

Likes: 0

Dislikes: 0

Dennis Minton - Florida Keys Electric Cooperative Assoc. - 1 -

Selected Answer: Yes

Answer Comment:

Response:

Likes: 0

Dislikes: 0

Gul Khan - Gul Khan On Behalf of: Rod Kinard, Oncor Electric Delivery, 1

Selected Answer: Yes

Answer Comment:

Response:

Likes: 0

Dislikes: 0

Charles Yeung - Southwest Power Pool, Inc. (RTO) - 2 - SPP

Selected Answer:

Answer Comment:

Response:

Likes: 0

Dislikes: 0

Dana Wheelock - Seattle City Light - 3 -

Selected Answer:

Answer Comment:

Response:

Likes: 0

Dislikes: 0

Thomas Foltz - AEP - 5 -

Selected Answer: No

Answer Comment:

PRC-010-2, R5:
UVLS entities should have input in the development of the CAP, as opposed to simply having it provided to them. We suggest adding the phrase “in accordance with the UVLS entities” so that R5 instead reads… “Each Planning Coordinator or Transmission Planner that identifies deficiencies in its UVLS Program during an assessment

performed in either Requirement R3 or R4 shall, in accordance with the UVLS entities, develop a Corrective Action Plan to address the deficiencies and subsequently provide the Corrective Action Plan, including an implementation schedule, to UVLS entities…"

While AEP is supportive of the overall direction and substance of the proposed changes, we have chosen to vote negative driven by our objections to not involving the UVLS entities in the development of the CAP in R5.

Response: The drafting team thanks you for your comments. The comment pertains to work completed under the first phase of the UVLS project that developed version 1 of PRC-010 and the retired PRC-022-1. This phase 2 work only pertains to addressing UVLS equipment Misoperation and relies on the previously balloted and adopted PRC-010-1.

Likes: 0

Dislikes: 0

Si Truc Phan - Hydro-Québec TransÉnergie - 1 - NPCC

Selected Answer: Yes

Answer Comment:

Response:

Likes: 0

Dislikes: 0

David Jendras - Ameren - Ameren Services - 3 -

Selected Answer:

Answer Comment:

Response:

Likes: 0

Dislikes: 0

Mike Smith - Manitoba Hydro - 1 -

Selected Answer: Yes

Answer Comment:

Response:

Likes: 0

Dislikes: 0

John Merrell - Tacoma Public Utilities (Tacoma, WA) - 1 -

Selected Answer:	Yes
Answer Comment:	The proposed revisions appear to address Misoperation identification and correction of UVLS equipment. However, there may be some cases in which the timeframes in PRC-004-5 and PRC-010-2 are not completely compatible. Specifically, under PRC-010-2 Requirement R4, the Planning Coordinator (PC) or Transmission Planner (TP) has 12 calendar months of an event that resulted in a voltage excursion for which its UVLS Program was designed to operate to perform an assessment to evaluate the performance (i.e., operaton and non-operation) of the UVLS Program equipment. However, under PRC-004-5 Requirement R1, each Transmission Owner (TO) and Distribution Provider (DP) that owns a BES interrupting device that operated under the circumstances in Parts 1.1 through 1.3 only has 120 calendar days of the BES interrupting device operation to identify whether its Protection System component(s) caused a Misoperation. It seems like a TO or DP would have to determine if there was a Misoperation before the PC or TP might have completed their assessment. Could this result in premature determination by a TO or DP; or could a TO or DP come to a different conclusion than their PC or TP? It seems like the timeframes in these requirements need to be better aligned. Alternatively, perhaps only PRC-010-1 should be revised, or perhaps the distinction between what the two standards are requiring needs to be made clearer. Another possible issue is that each standard requires development of CAPs, and the timeframes required to develop the CAPs are different.
Response:	The drafting team thanks you for your comment. Entities that experience an operation of the UVLS equipment that trip one or more BES Elements (irrespective of a voltage excursion) must address reviews in a shorter time (PRC-004). Likewise, planners will assess the performance of the UVLS Program following an event that resulted in a voltage

excursion for which its UVLS Program was designed to operate. The assessment determines whether the UVLS equipment operated according to the design of the program, which will include the operation or non-operation of any UVLS equipment within the program.

The following addresses the timing between the proposed PRC-004-5 and PRC-010-2.

For an event that resulted in a voltage excursion for which the UVLS Program was designed to operate, it is acceptable for an applicable entity under the proposed PRC-004-5 to begin reviewing the operation. If the entity determines a Misoperation occurred, it may develop a Corrective Action Plan (CAP). Developing the CAP and correcting the Misoperation could occur in advance of the assessment conducted by the Planning Coordinator (PC) or Transmission Planner (TP) under the proposed PRC-010-2. The drafting team would anticipate the applicable entity under PRC-004 to communicate their findings; therefore, the PC or TP would account for the findings during the post event assessment.

For reliability, it is important to address UVLS that trip BES Elements on a timely basis. The PC or TP under PRC-010 is allocated an amount of time that is commensurate with the work necessary to perform the post event analysis. For example, collecting event data such as voltage, confirming UVLS settings, potential Misoperation information, and performing the analysis to evaluate the overall performance of the UVLS Program.

Likes: 0

Dislikes: 0

Michael Jones - National Grid USA - 1 -

Selected Answer:	No
Answer Comment:	National Grid voted Negative regarding PRC-010-1 and continues to vote Negative regarding PRC-010-2. The concern is that R2 gives considerable authority to the Planning Coordinator or Transmission Planner. Nowhere in the new standard is there any provision for a UVLS entity such as a Transmisison Owner to comment or advise on the feasibility of the program specification, and particulary the implementation schedule. There should be an opportunity for the UVLS entity to provide input to the plan and schedule, and a mechanism for resolving disagreement. We have a similar concern with R5 with regard to the specification and executation of the Corrective Action Plan. Please consider having separate ballots for PRC-010-2 and PRC-004-5, instead of a combined ballot.
Response:	The drafting team thanks you for your comments. The comment pertains to work completed under the first phase of the UVLS project that developed version 1 of PRC-010 and retired PRC-022. This phase 2 work only pertains to addressing UVLS equipment Misoperation and relies on the previously balloted and adopted PRC-010-1.
Likes:	0
Dislikes:	0

Michael Shaw - Lower Colorado River Authority - 6 -

Selected Answer:	Yes
Answer Comment:	

Response:

Likes: 0

Dislikes: 0

Brian Shanahan - National Grid USA - 3 -

Selected Answer: No

Answer Comment: National Grid voted Negative regarding PRC-010-1 and continues to vote Negative regarding PRC-010-2. The concern is that R2 gives considerable authority to the Planning Coordinator or Transmission Planner. Nowhere in the new standard is there any provision for a UVLS entity such as a Transmission Owner to comment or advise on the feasibility of the program specification, and particularly the implementation schedule. There should be an opportunity for the UVLS entity to provide input to the plan and schedule, and a mechanism for resolving disagreement. We have a similar concern with R5 with regard to the specification and execution of the Corrective Action Plan.

Please consider having separate ballots for PRC-010-2 and PRC-004-5, instead of a combined ballot.

Response: The drafting team thanks you for your comments. The comment pertains to work completed under the first phase of the UVLS project that developed version 1 of PRC-010 and retired PRC-022. This phase 2 work only pertains to addressing UVLS equipment Misoperation and relies on the previously balloted and adopted PRC-010-1.

Likes: 0

Dislikes: 0

Stephen Pogue - M and A Electric Power Cooperative - 3 -

Selected Answer:

Answer Comment:

Response:

Likes: 0

Dislikes: 0

---

christina bigelow - Electric Reliability Council of Texas, Inc. - 2 -

Selected Answer: Yes

Answer Comment:

Response:

Likes: 0

Dislikes: 0

Chris Scanlon - Exelon - 1 -

Selected Answer: Yes

Answer Comment:

Response:

Likes: 0

Dislikes: 0

Shari Heino - Brazos Electric Power Cooperative, Inc. - 5 -

Selected Answer: No

Answer Comment:

See ACES comments

Response:

Likes: 0

Dislikes: 0

Chris Gowder - Florida Municipal Power Agency - 3,4,5,6 - FRCC

Selected Answer:

Answer Comment:

Response:

Likes: 0

Dislikes: 0

Kaleb Brimhall - Colorado Springs Utilities - 5 -

Selected Answer: Yes

Answer Comment:

Response:

Likes: 0

Dislikes: 0

Lee Pedowicz - Northeast Power Coordinating Council - 10 - NPCC

Selected Answer: No

Answer Comment:

A general comment regarding the Applicability Section of PRC-004-5 is that the items listed under sub-Part 4.2.1 are not Facilities by NERC definition.

The addition of 4.2.3 to the Facilities Section "Undervoltage load shedding (UVLS) that is intended to trip one or more BES Elements" is not necessary. The BES definition excludes Elements that serve radial load. UVLS schemes are normally intended to trip loads which are supplied by radial circuits (feeders), and these circuits (feeders) would not normally be included in the BES definition. It may be helpful for the drafting team to include an example in the application guideline to provide greater clarity.

In the Basis for Revision Section of what should be PRC-010-2, on page 3 of the standard, the last two sentences affirm that the rationale boxes in the Supplemental Material section of the standard will remain. The rationale box for Requirement R5 will be removed. The only Rationale Box in the B. Requirements and Measures section of the standard is for R4. Should the statement read "The rationale box for Requirement R4 will be removed."

We agree that the Misoperation identification and correction of UVLS equipment as retired by PRC-022-1, Requirements R1 and Part R1.5 is addressed by the proposed revisions of PRC-004-5 and PRC-010-2. However, the addition of Part 4.2 to PRC-010-2 may create duplicate effort for evaluating proper operations and misoperations of UVLS equipment.

This comment is made on the basis that PRC-004-4 already requires UVLS entities (TO, GO and DP) to assess and identify whether or not misoperations were the cause of BES interrupting device(s) (which now include UVLS) operations. Through this assessment and identification process, the proper or improper operations of the UVLS equipment would have been identified and, where necessary and appropriate, corrective action plans would have been developed and implemented. To have an additional Part 4.2 which requires the Planning Coordinator or Transmission Planner to evaluate the performance (i.e., operation and non-operation) of the UVLS Program seems redundant and unnecessary, despite such evaluation is performed by different responsible entities. Propose that Part 4.2 be removed.

Additionally, it is not clear which UVLS Misoperations are the subject of the proposed revised PRC-004-5 standard. The UVLS facilities of PRC-004-5 are "Undervoltage load shedding (UVLS) that is intended to trip one or more BES Elements." The typical UVLS schemes trip circuits (feeders) that supply loads. These circuits (feeders) are not normally BES elements since they are excluded by the BES definition that became effective July 1, 2014. Clarification is needed.

Response:

The drafting team thanks you for your comments. The section titles "Functional Entities" and "Facilities" found in the standard do not refer specifically to the *Glossary of Terms Used in NERC Reliability Standards* or the definitions identified in the NERC Rules of Procedure.

With regard to the comment about radial lines, the applicability in the proposed PRC-004-5 addresses the potential for the existence of UVLS that trip one or more BES Elements today, or in the future. For example, if a change were to occur in the BES definition, UVLS equipment would be properly addressed to avoid a gap in reliability. The drafting team believes the distinction is clear and an example is not necessary.

The observation concerning the Rational Box for Requirement R5 is correct. This text should reference Requirement R4. Change made.

Concerning the duplication of effort between the proposed PRC-004-5 and PRC-010-2, the drafting team notes that PRC-004 requires the owners of UVLS to evaluate the relay when it trips a BES interrupting device. In PRC-010, the planners evaluate the performance of the UVLS Program with consideration whether the UVLS equipment operated or did not operate in accordance with the UVLS Program design.

For an event that resulted in a voltage excursion for which its UVLS Program was designed to operate, it is acceptable for an applicable entity under the proposed PRC-004-5 to begin reviewing the operation. If the entity determines a Misoperation occurred, it may develop a Corrective Action Plan (CAP). Developing the CAP and correcting the Misoperation could occur in advance of the assessment conducted by the Planning Coordinator (PC) or Transmission Planner (TP) under the proposed PRC-010-2. The drafting team would anticipate the applicable entity under PRC-004 to communicate their findings; therefore, the PC or TP would account for the findings during the post event assessment.

Likes: 0

Dislikes: 0

Dennis Chastain - Tennessee Valley Authority - 1,3,5,6 - SERC

Selected Answer: Yes

Answer Comment:

Response:

Likes: 0

Dislikes: 0

Matt Culverhouse - City of Bartow, Florida - 3 -

Selected Answer:

Answer Comment:

Response:

Likes: 0

Dislikes: 0

Payam Farahbakhsh - Hydro One Networks, Inc. - 1 -

Selected Answer: Yes

Answer Comment: The posted PRC-010-2 has requirement 4.2 applicable to PC and TP. However, PC/TP generally don't have the expertise for the design/engineering

aspects. The SDT should consider making 4.2 applicable to the owners of the schemes.

Response: The drafting team thanks you for your comment. The intent of the proposed PRC-010-2, Requirement R4, Part 4.2 is to require the Planning Coordinator or Transmission Planner to assess the UVLS Program following an event that resulted in a voltage excursion for which its UVLS Program was designed to operate. The planner will collect information concerning the event in order to conduct an assessment whether (4.1) the program resolved the undervoltage issues associated with the event, and (4.2) the program equipment operated or did not operate as expected according to the characteristics of the event. The assessment by its very nature assesses the equipment at the program level and not the design/engineering aspects applicable to UVLS Entities.

Likes: 0

Dislikes: 0

Mark Wilson - Mark Wilson On Behalf of: Leonard Kula, Independent Electricity System Operator, 2

Selected Answer: No

Answer Comment: We agree that the Misoperation identification and correction of UVLS equipment as retired by PRC-022-1, Requirements R1 and R1.5 is addressed by the proposed revisions of PRC-004-5 and PRC-010-2. However, the addition of Part 4.2 to PRC-010-2 may create duplicated effort for evaluating proper operations and misoperations of UVLS equipment.

This comment is made on the basis that PRC-004-4 already requires UVLS entities (TO, GO and DP) to assess and identify whether or not misoperations were the cause of BES interrupting device(s) (which now include UVLS) operations. Through this

assessment and identification process, the proper or improper operations of the UVLS equipment would have been identified and, where necessary and appropriate, corrective action plans would have been developed and implemented. To have an additional Part 4.2 which requires the Planning Coordinator or Transmission Planner to evaluate the performance (i.e., operation and non-operation) of the UVLS Program seems redundant and unnecessary, despite such evaluation is performed by different responsible entities.

We therefore propose that Part 4.2 be removed.

Moreover, the IESO notes that the addition to the Facilities Section, bullet 4.2.3 "Undervoltage load shedding (UVLS) that is intended to trip one or more BES Elements" does not appear to be necessary. The BES definition excludes elements that serve radial load. UVLS schemes are normally intended to trip loads which are supplied by circuits (feeders). These circuits (feeders) would not normally be included in the BES definition. It may be helpful for the draft team to include an example in the application guideline to provide greater clarity.

Response:

The drafting team thanks you for your comments.

Concerning the duplication of effort between the proposed PRC-004-5 and PRC-010-2, the drafting team notes that PRC-004 requires the owners of UVLS to evaluate the relay when it trips a BES interrupting device. In PRC-010, the planners evaluate the performance of the UVLS Program with consideration whether the UVLS equipment operated or did not operate in accordance with the UVLS Program design.

For an event that resulted in a voltage excursion for which the UVLS Program was designed to operate, it is acceptable for an applicable entity under the proposed PRC-004-5 to begin reviewing the operation. If the entity determines a Misoperation occurred, it may develop a Corrective Action Plan (CAP). Developing the CAP and correcting the Misoperation could occur in advance of the assessment conducted by the Planning Coordinator (PC) or Transmission Planner (TP) under the proposed PRC-010-2. The drafting team would anticipate the applicable entity under PRC-004 to communicate

their findings; therefore, the PC or TP would account for the findings during the post event assessment.

With regard to the comment about radial lines, the applicability in the proposed PRC-004-5 addresses the potential for the existence of UVLS that trip one or more BES Elements today, or in the future. For example, if a change were to occur in the BES definition, UVLS equipment would be properly addressed to avoid a gap in reliability. The drafting team believes the distinction is clear and an example is not necessary.

Likes: 0

Dislikes: 0

Jeni Renew - SERC Reliability Corporation - 10 - SERC

Selected Answer: No

Answer Comment:

1) On the clean versions of PRC-010-2 and PRC-004-5, please remove the 'under' after 'BES Element' in the Basis for Revision on page 2 last paragraph. "The two-pronged approach ensures that any UVLS Program equipment containing a deficiency is identified and corrected under PRC-010 and UVLS that trips a BES Element ***under*** is corrected under PRC-004 to address the requirements in the retired PRC-022-1."

2) PRC-004-5 and PRC-010-2 both require development of corrective action plans (CAP) with different time requirements (PRC-010-2 provides 12 months to analyze an operation. PRC-004-5 R1 requires identification in 120 days. Does the 120 days start during the 12 months of analysis or is the expectation that the Misoperation will be

identified in the first 120 days if a BES Element is involved?) Can you provide examples to clarify which standard is to be referenced for developing the CAP?

3) Please explain how there is no double jeopardy having requirements for CAPS in multiple standards?

Example: An entity has a BES breaker that should have tripped during a UVLS event but did not trip. Is this reportable under PRC-010-2 or PRC-004-5? Which standard's time frame applies?

Response:

The drafting team thanks you for your comments.
1) The observation about the additional "under" has been revised as noted. Change made.
2) The 120 calendar days begins when a BES interrupting device operates as required by the proposed PRC-004-5, Requirement R1; therefore, it would start at the same point defined by the proposed PRC-010-2. See #3 about which standard is addressing the Corrective Action Plan (CAP).
3) For an event that resulted in a voltage excursion for which its UVLS Program was designed to operate, the planner would assess UVLS equipment under the proposed PRC-010-2, Requirement R4, Part 4.2 and provide a CAP, if necessary, to the UVLS Entity. Under the proposed PRC-004-5, the UVLS equipment owner would develop a CAP on its own to address any BES UVLS equipment Misoperation.

(From the "Example") However, in the example above the UVLS owner would not be obligated to review the UVLS relay because a BES interrupting device did not operate (see PRC-004-5, Requirement R1). In this case, the planner would identify the non-operation of the UVLS that should have tripped the BES Element. Additionally, the planner would develop a Corrective Action Plan (CAP) for the UVLS Entity to implement. The Misoperation of UVLS is not reportable by either PRC-010 or PRC-004, but is reportable by the equipment owner under Section 1600 of the NERC Rules of Procedure, Request for Data or Information.

Likes:	0
Dislikes:	0

Rachel Coyne - Texas Reliability Entity, Inc. - 10 -

Selected Answer:	No
Answer Comment:	Texas RE is concerned that an entity will not analyze a mis-operation if it does not trip a BES element. The language in PRC-004-5, "intended to trip one or more BES elements", may create a reliability gap. In the ERCOT region, there is little to no UVLS or UFLS that will or is intended to trip a BES element. It is not in the best interest of reliability to have a mis-operation occur and an entity not be required to analyze the issue and provide corrective actions. Furthermore, there is an inconsistency with the language in PRC-010-2 and PRC-004-5 due to the use of the word "impact" indicated in PRC-010-2. In the ERCOT region, relays can have a major impact on the BES and would meet the requirements of PRC-010-2. Unfortunately, because of the language included in PRC-004-5, if entity determines that the UVLS is not intended to trip BES elements, the mis-operation would not need to be analyzed.
Response:	The drafting team thanks you for your comments and contends that entities will address UVLS (not associated with a UVLS Program) that does not trip a BES Element because load would be lost. Under the UVLS Program, such UVLS equipment is required to be assessed for an event that resulted in a voltage excursion for which its UVLS Program was designed to operate. Therefore, there is no inconsistency or gap in addressing UVLS equipment.

Likes: 0

Dislikes: 0

Oliver Burke - Entergy - Entergy Services, Inc. - 1 -

Selected Answer: No

Answer Comment: Entergy supports comments provided by SERC PCS group.

Response: The drafting team thanks you for your support of SERC PCS group comments.

Likes: 0

Dislikes: 0

Kathleen Black - DTE Energy - 3,4,5 - RFC

Selected Answer: Yes

Answer Comment:

Response:

Likes: 0

Dislikes: 0

Catherine Wesley - PJM Interconnection, L.L.C. - 2 - SERC,RFC

Selected Answer: Yes

Answer Comment:

Response:

Likes: 0

Dislikes: 0

Richard Vine - California ISO - 2 -

Selected Answer:

Answer Comment:

Response:

Likes: 0

Dislikes: 0

Brian Evans-Mongeon - Utility Services, Inc. - 4 -

Selected Answer:

Answer Comment:

Response:

Likes: 0

Dislikes: 0

Colby Bellville - Duke Energy - 1,3,5,6 - FRCC,SERC,RFC

Selected Answer: Yes

Answer Comment: Duke Energy agrees with the proposal made by the drafting team. We thank the drafting team for their efforts.

Response: The drafting team thanks you for your comments.

Likes: 0

Dislikes: 0

Paul Malozewski - Hydro One Networks, Inc. - 3 -

Selected Answer:

Answer Comment:

Response:

Likes: 0

Dislikes: 0

George Tatar - Black Hills Corporation - 5 -

Selected Answer:

Answer Comment:

Response:

Likes:	0
Dislikes:	0

Jason Marshall - ACES Power Marketing - 6 - MRO,WECC,TRE,SERC,SPP,RFC

Selected Answer:	No
Answer Comment:	(1) We believe that the modifications to PRC-010 and PRC-004 are duplicative and overlapping. As proposed, PRC-004 will require equipment owners to evaluate any UVLS relay that they have installed regardless of whether it is part of an RAS, UVLS Program or installed independently for local reasons, while PRC-010 requires the PC or TP to evaluate the "performance of UVLS Program equipment" for voltage excursions. While we disagree with the TP or PC having responsibility to evaluate equipment performance, we are even more concerned that there is not a clear delineation between when PRC-004 applies for evaluating equipment performance and when PRC-010 applies. As written now, there would appear to be an overlap when UVLS relays that are part of a UVLS program operate. A simple solution to eliminate this overlap and duplication would be to strike Part 4.2. Then, the PC and TP would appropriately rely the equipment owners to perform their own evaluation, which is where the responsibility should belong. (2) The supporting documentation such as the Basis for Revision, Guidelines and Technical Basis and Frequently Asked Questions neither adequately explain the need for duplication between PRC-004 and PRC-010 nor the demarcation for responsibility for evaluating equipment performance. In fact, these supporting documents actually are contradictory at times. For example, the end of the second paragraph states that PRC-004 does not cover the "performance (operation or non-operations) of UVLS Program equipment not covered by the strict process of PRC-004". Yet it never explains how PRC-004 does not cover the performance. We disagree and believe it does cover the performance. If the drafting team intends the performance of the

equipment to be something different than whether the UVLS relays operated correctly or not, this needs further explained in the technical guidelines as there is little to no explanation of what is meant beyond correct operation of the relays. Near the end of the first paragraph for the "Guidelines for Requirement R4," the paragraph states that "Misoperation of UVLS equipment is addressed as a deficiency" in PRC-010. This seems to contradict the inclusion of all UVLS equipment installed to trip BES equipment in thePRC-004 applicability section where it is processed as a Misoperation. In the second paragraph of the response to the fourth FAQ, there is a statement that the definition of UVLS Program "does not explicitly note that the term excludes centrally controlled undervoltage-based load shedding." To the contrary, the last sentence of UVLS program quite clearly excludes centrally controlled UVLS.

(3) As proposed, PRC-004 will apply to all UVLS relays that can trip BES Elements including those that are part of a UVLS program and those that are not part of a UVLS program. That latter category include the centrally controlled UVLS or UVLS installed to protect local areas or equipment. While application of PRC-004 to UVLS installed to protect local areas may be appropriate, it is not appropriate to include those that are part of a centrally controlled system as this would be considered a RAS to which PRC-016 would apply. In the "Guideline for UVLS Program Definition," it is stated very clearly that a centrally controlled UVLS system is a RAS.

(4) The VSLs for PRC-010 R4 were not modified in response to the modification of the requirement. It is now possible to partially meet the main requirement within the associated time frame. The VSLs should reflect this.

Response:

The drafting team thanks you for your comments.

1) Concerning the duplication of effort between the proposed PRC-004-5 and PRC-010-2, the drafting team notes that PRC-004 requires the owners of UVLS to evaluate the relay when it trips a BES interrupting device. In PRC-010, the planners evaluate the performance of the UVLS Program with consideration whether the UVLS equipment operated or did not operate in accordance with the UVLS Program design.

2) The drafting team notes that PRC-004 requires the owners of UVLS to evaluate the relay when it trips a BES interrupting device. In PRC-010, the planners evaluate the

performance of the UVLS Program with consideration whether the UVLS equipment operated or did not operate in accordance with the UVLS Program design.

3) UVLS that trips one or more BES Elements would be applicable to PRC-004. UVLS under PRC-010 is applicable to UVLS defined by a UVLS Program, which specifically excludes centrally controlled UVLS by definition. Centrally controlled UVLS is a Remedial Action Scheme (RAS) by the adopted definition. So, RAS standards would apply to centrally controlled UVLS. It is possible that UVLS that trips a BES Element to be included within a UVLS Program; however, this is expected to be rare.

4) The team contends that both 4.1 and 4.2 must be performed together to ensure an adequate assessment of the UVLS Program; therefore, the drafting team is not proposing a Violation Severity Level which accounts for partial performance.

Likes: 0

Dislikes: 0

Shannon Mickens - Southwest Power Pool, Inc. (RTO) - 2 - SPP

Selected Answer: Yes

Answer Comment: We agree that specific steps are needed to be taken to continuously improve the reliability of the Bulk Electric System (BES). The evaluating and documenting of the process helps to identify critical facilities (which could lead to Misoperations) and to ensure that the same issues doesn't reoccur on the system. Additionally, the documented information can be used to help develop and implement a Correction Action Plan (CAP) with accuracy when it's required. We would like to thank the drafting team for making great efforts to address the industry's needs.

Additionally, we would like to suggest to the drafting team to include the term 'undervoltage-based load shedding' to the definition of the Remedial Action Scheme for consistency. In the Compliance Assessment Approach Specifics Section (RSAW-PRC-010-2) R1…Note to Auditor, our interpretation is that the term 'undervoltage-based load shedding' is not a part of the UVLS Program and it states that this term falls under the NERC Glossary definition of Remedial Action Scheme (RAS). However if you go out to the NERC site, the current definition of Remedial Action Scheme (RAS) doesn't not contain this particular term.

Response: The drafting team thanks you for your comment and notes that revising the NERC Board of Trustees adopted definition of "Remedial Action Scheme" (RAS) is not with the scope of this project. A RAS currently addresses centrally controlled UVLS schemes. Also, the drafting team has deleted "-based" from undervoltage load shedding in the "Note to Auditor" for clarity. The change was made to the RSAW and submitted to NERC Compliance. Please note that RSAWs are not posted during the final ballot.

Likes: 0

Dislikes: 0

Daniela Hammons - CenterPoint Energy Houston Electric, LLC - 1 - TRE

Selected Answer: Yes

Answer Comment:

(1) CenterPoint Energy agrees that the Misoperation identification and correction of UVLS equipment as retired by PRC-022-1, Requirements R1 and R1.5, is addressed by the proposed revisions of PRC-004-5 and PRC-010-2. However, the Company cannot support this draft of PRC-010-2 due to the current wording of Requirement R4.2.

(2) The drafting team proposes to add Requirement R4.2 to Requirement R4 in PRC-

	010 as follows: Each Planning Coordinator or Transmission Planner shall, within 12 calendar months of an event that resulted in a voltage excursion for which its UVLS Program was designed to operate, perform an assessment to evaluate: 4.1. Whether its UVLS Program resolved the undervoltage issues associated with the event, and 4.2. The performance (i.e., operation and non-operation) of the UVLS Program equipment. CenterPoint Energy believes a more relevant method to capture the essence of PRC-022 Requirements R1 and R1.5 is to revise Requirement R4.2 as follows: Whether the UVLS entity(ies) adhered to the UVLS Program specifications. With this revised wording for Requirement R4.2, the assessment required under Requirement R4 would address whether the UVLS Program resolved the undervoltage issue associated with the event and whether the UVLS entity or entities involved adhered to the established UVLS Program specifications. It would be obvious that the operation of the UVLS Program equipment performed adequately when the amount(s) of load shedding in a voltage excursion event meets the expected minimum amount(s) as specified in a UVLS Program. However, while an assessment (Requirement R4.1) may determine the voltage excursion event was resolved for the specific system conditions and specific contingency, the UVLS Program may have been developed for other system conditions and more severe contingencies. Therefore, the assessment (Requirement R4.2) must include whether the UVLS entity(ies) met the obligated amount of load shedding specified by the Planning Coordinator or Transmission Planner. With a large number of UVLS equipment components, it is possible that a small number may not operate (i.e., "non-operation"). Examples of UVLS equipment non-operation would include the following: equipment problems such as a defective trip coil in a distribution circuit breaker or a defective relay and distribution circuit breaker unavailability due to maintenance (routine preventive or corrective) or construction (breaker replacement or station expansion). A small number of non-operations are inconsequential if the amount(s) of load shedding meets Planning Coordinator or Transmission Planner expectations. Furthermore, any deficiencies identified by either the proposed Requirement R4.1 or the revised wording for Requirement R4.2 would result in a Corrective Action Plan under Requirement R5.
Response:	The drafting team thanks you for your comment. 1) See #2. 2) The proposed wording "whether the UVLS entity or entities involved adhered to the established UVLS Program specifications" places judgement on UVLS owners as to

whether the entity complied with the Planning Coordinator or Transmission Planner specification. This concern is addressed by PRC-010, Requirement R2, which requires "[e]ach UVLS entity shall adhere to the UVLS Program specifications and implementation schedule determined by its Planning Coordinator or Transmission Planner associated with UVLS Program development per Requirement R1 or with any Corrective Action Plans per Requirement R5."

The drafting team contends that post-event assessments are intended to assure the UVLS Program operated consistent with its design. The failure or Misoperation of one of more UVLS relays could occur, but should not impact the overall performance of the UVLS Program. The Planning Coordinator or Transmission Planner with the proposed PRC-010, Requirement R4, Part 4.2 is intended to ensure the assessment addresses the operation and non-operation of UVLS Program equipment according to the characteristics of the event. The assessment in Requirement R4 should reveal items suggested in the above comment examples could be valid reasons for lack of performance. Part 4.2 is intended to require the planner to assess issues provided in the comment examples, and more specifically any operation or non-operation of UVLS Program equipment.

Likes: 0

Dislikes: 0

Paul Shipps - Lakeland Electric - 6 -

Selected Answer: Yes

Answer Comment:

Response:

Likes: 0

Dislikes: 0

Sergio Banuelos - Tri-State G and T Association, Inc. - 1,3,5 - MRO,WECC

Selected Answer: Yes

Answer Comment:

Tri-State suggests changing the implementation plans for PRC-004-5 and PRC-010-2. They both use PRC-010-1 as a reference point even though it has not yet been approved by FERC and therefore has no definitive effective date. If PRC-010-1 doesn't get approved before these versions do then, according to the implementation plans, these versions will be effective the 1st day of the 1st calendar quarter after the standards get approved by FERC. The drafting team should edit the implementation plans to allow more time for entities to prepare for the effective date if that were the case. We would suggest some language stating that the standards will become effective on the 1st day of the 1st calendar quarter that is 12 months after approval which would be similar to the time provided in PRC-010-1.

Response:

The drafting team thanks you for your comment. NERC Legal aided the drafting team in constructing the Implementation Plan. It is constructed in a manner to allow the proposed PRC-010-2 to surpass PRC-010-1 and stand on its own, or become effective very soon after the approval of PRC-010-1. Also, not keying both standards off of PRC-010-2 approval could lead to an unintentional gap in enforcement. The drafting team contends that an additional 12-month implementation beyond the previous versions is unnecessary.

Likes: 0

Dislikes: 0

Oshani Pathirane - Hydro One Networks, Inc. - 1 - NPCC

Selected Answer:

Answer Comment:

Response:

Likes: 0

Dislikes: 0

Molly Devine - IDACORP - Idaho Power Company - 1 -

Selected Answer: No

Answer Comment: In PRC-004-5 Applicability section 4.2.3 I suggest using the phrase "Undervoltage Load Shedding (UVLS) Program equipment that is intended to trip one or more BES Elements". This clarifies the equipment to be analyzed is part of a UVLS Program, which I believe is the intent.

Response:	The drafting team thanks you for your comment. The two proposed standards are constructed to address two different issues. The proposed PRC-004-5 is addressing UVLS that trip one or more BES Elements, which may include relays in a UVLS Program; however, if that is the case, it would expected to be rare. The proposed PRC-010-2 addresses UVLS Program equipment, which typically trips distribution equipment and would not be applicable to the proposed PRC-004-5.
Likes:	0
Dislikes:	0

Cain Braveheart - Bonneville Power Administration - 1,3,5,6 - WECC

Selected Answer:	Yes
Answer Comment:	
Response:	
Likes:	0
Dislikes:	0

Terry BIlke - Midcontinent ISO, Inc. - 2 -

Selected Answer: Yes

Answer Comment:

Response:

Likes: 0

Dislikes: 0

Bernard Johnson - Oglethorpe Power Corporation - 5 -

Selected Answer:

Answer Comment:

Response:

Likes: 0

Dislikes: 0

Additional Comments

Puget Sound Energy
Karen Silverman

NERC Question: Do you agree that the Misoperation identification and correction of UVLS equipment as retired by PRC-022-1, Requirements R1 and R1.5 is
addressed by the proposed revisions of PRC-004-5 and PRC-010-2? If not, please provide comments and suggestions to improve clarity.

PSE Answer: No.

If modelled like PRC-006 (UFLS Program), PRC-010 could just govern design and documentation of UVLS Program mitigation of voltage instability, voltage collapse or Cascading impacting the Bulk Electric System. Misoperations and resulting CAPs could be covered under PRC-004-5. CAP Example #2 on Page 25 of PRC-010 should be included in PRC-004-5

Response: The drafting team thanks you for your comment. Entities that experience an operation of the UVLS equipment that trip one or more BES Elements (irrespective of a voltage excursion) must address reviews in a shorter time (PRC-004). Likewise, planners will assess the performance of the UVLS Program following an event that resulted in a voltage excursion for which its UVLS Program was designed to operate. The assessment determines whether the UVLS equipment operated according to the design of the program, which will include the operation or non-operation of any UVLS equipment within the program.

The following addresses the timing between the proposed PRC-004-5 and PRC-010-2.

For an event that resulted in a voltage excursion for which its UVLS Program was designed to operate, it is acceptable for an applicable entity under the proposed PRC-004-5 to begin reviewing the operation. If the entity determines a Misoperation occurred, it may develop a Corrective Action Plan (CAP). Developing the CAP and correcting the Misoperation could occur in advance of the assessment conducted by the Planning Coordinator (PC) or Transmission Planner (TP) under the proposed PRC-010-2. The drafting team would anticipate the applicable entity under PRC-004 to communicate their findings; therefore, the PC or TP would account for the findings during the post event assessment.

The drafting team does not believe adding the Example #2 (Page 18 of 33) to the proposed PRC-004-5 add any benefit because there are similar examples regarding the CAP.

Hydro One Networks
Paul Malozewski
Oshani Pathirane

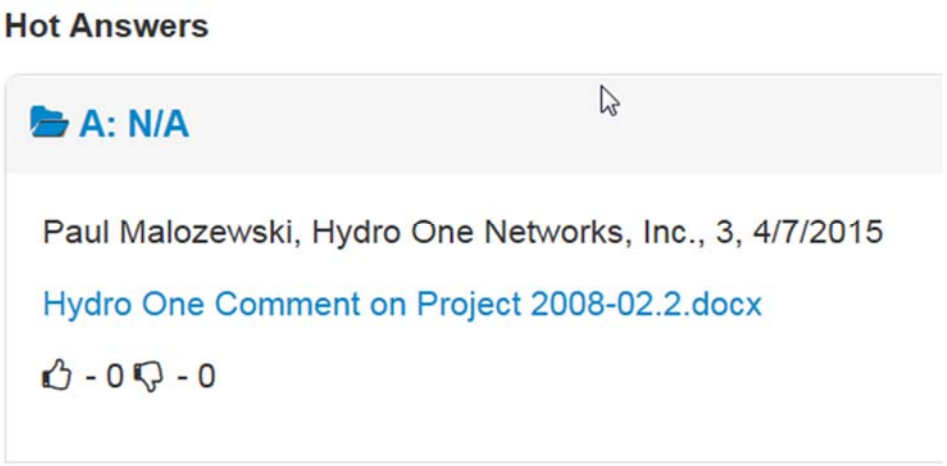

Hydro One supports the following comment already submitted by the TFSP: " the addition to the Facilities Section, bullet 4.2.3 "Undervoltage load shedding (UVLS) that is intended to trip one or more BES Elements" does not appear to be necessary. The BES definition excludes elements that serve radial load. UVLS schemes are normally intended to trip loads which are supplied by circuits (feeders). These circuits (feeders) would not normally be included in the BES definition. It may be helpful for the draft team to include an example in the application guideline to provide greater clarity".

Response: With regard to the comment about radial lines, the applicability in the proposed PRC-004-5 addresses the potential for the existence of UVLS that trip one or more BES Elements today, or in the future. For example, if a change were to occur in the BES definition, UVLS equipment would be properly addressed to avoid a gap in reliability. The drafting team believes the distinction is clear and an example is not necessary.

A: N/A

Oshani Pathirane, **On Behalf of:** Hydro One Networks, Inc., NPCC, Segments 1

Hydro One's additional comments on Project 2008-02.2.docx

- 0 - 0

Part 4.2 is specific to all devices not just BES as required under PRC-004. It puts the onus on the RC/TP to assess the success of the program if ever called upon to work. It is different than the PRC-004 requirement.

Response: Concerning the duplication of effort between the proposed PRC-004-5 and PRC-010-2, the drafting team notes that PRC-004 requires the owners of UVLS to evaluate the relay when it trips a BES interrupting device. In PRC-010, the planners evaluate the performance of the UVLS Program with consideration whether the UVLS equipment operated or did not operate in accordance with the UVLS Program design.

For an event that resulted in a voltage excursion for which its UVLS Program was designed to operate, it is acceptable for an applicable entity under the proposed PRC-004-5 to begin reviewing the operation. If the entity determines a Misoperation occurred, it may develop a Corrective Action Plan (CAP). Developing the CAP and correcting the Misoperation could occur in advance of the assessment conducted by the Planning Coordinator (PC) or Transmission Planner (TP) under the proposed PRC-010-2. The drafting team would anticipate the applicable entity under PRC-004 to communicate their findings; therefore, the PC or TP would account for the findings during the post event assessment.

Southwest Power Pool
Charles Yeung

Question

1. Do you agree that the Misoperation identification and correction of UVLS equipment as retired by PRC-022-1, Requirements R1 and R1.5 is addressed by the proposed revisions of PRC-004-5 and PRC-010-2? If not, please provide comments and suggestions to improve clarity.

☐ Yes

X No

Comments:

1. In PRC-10, the applicable entities defines "UVLS entities" as those Transmission Owners with UVLS equipment. However, R1.2, requires PCs and TPs to consider the generator ride-through capabilities in their UVLS program studies. Generator data is needed from Generator Owners. These should be applicable entities to PRC-010 as well.

   We agree that the Misoperation identification and correction of UVLS equipment, as retired by PRC-022-1, Requirements R1 and R1.5, are addressed by the proposed revisions of PRC-004-5 and PRC-010-2. However, the addition of Part 4.2 to PRC-010-2 may create redundant efforts regarding evaluation of the proper operations and misoperations of UVLS equipment. More specifically, PRC-004-4 already requires UVLS entities (TO, GO and DP) to assess and identify whether or not misoperations were the cause of BES interrupting device(s) (which now include UVLS) operations). Through this assessment and identification process, the proper or improper operations of the UVLS equipment would have been identified and, where necessary and appropriate, corrective action plans would have been developed and implemented. The addition of Part 4.2, which requires the Planning Coordinator or Transmission Planner to evaluate the performance (i.e., operation and non-operation) of the UVLS Program, seems redundant to the efforts of the UVLS entities. Further, as the UVLS entities are the entities that actually operate, control, and maintain the UVLS

equipment, such entities would be in the best position to perform a thorough evaluation of the operation or misoperation of such equipment. The SRC, therefore, proposes that Part 4.2 in PRC-010-2 be removed or revised to remove redundancy and ensure that the most appropriate entity is performing such assessments. Should the SDT recommend that an independent review of such assessments and corrective actions occur, such could be considered in the context of Part 4.2

Response: The drafting team thanks you for your comment. Entities that experience an operation of the UVLS equipment that trip one or more BES Elements (irrespective of a voltage excursion) must address reviews in a shorter time (PRC-004). Likewise, planners will assess the performance of the UVLS Program following an event that resulted in a voltage excursion for which its UVLS Program was designed to operate. The assessment determines whether the UVLS equipment operated according to the design of the program, which will include the operation or non-operation of any UVLS equipment within the program.

The following addresses the timing between the proposed PRC-004-5 and PRC-010-2.

For an event that resulted in a voltage excursion for which its UVLS Program was designed to operate, it is acceptable for an applicable entity under the proposed PRC-004-5 to begin reviewing the operation. If the entity determines a Misoperation occurred, it may develop a Corrective Action Plan (CAP). Developing the CAP and correcting the Misoperation could occur in advance of the assessment conducted by the Planning Coordinator (PC) or Transmission Planner (TP) under the proposed PRC-010-2. The drafting team would anticipate the applicable entity under PRC-004 to communicate their findings; therefore, the PC or TP would account for the findings during the post event assessment.

Standard Development Timeline

This section is maintained by the drafting team during the development of the standard and will be removed when the standard becomes effective.

Development Steps Completed

1. The NERC Board of Trustees ("Board") adopted PRC-004-4 and PRC-010-1 and retired PRC-022-1 on November 13, 2014.
2. The NERC Standards Committee authorized the initial posting of the standard on February 18, 2015.
3. Draft 1 of PRC-004-5 was posted for a 45-day formal comment period from February 20 – April 7, 2015 and an initial ballot in the last ten days of the comment period from March 27 – April 7, 2015.

Description of Current Draft

The UVLSSDT is posting Draft 2 of PRC-004-5 – Protection System Misoperation Identification and Correction for a 10-day final ballot.

Anticipated Actions	Date
45-day formal comment period with ballot	February 2015
10-day final ballot	April 2015
Board adoption	May 2015

Project Development Background

The undervoltage load shedding (UVLS) standard drafting team (SDT) was tasked with addressing Misoperation of UVLS equipment during the development of version one of PRC-010 and version three of PRC-004 in Project 2010-05.1 (i.e., Misoperation). This project has been named phase 2 of Project 2008-02 (i.e., UVLS) for clarity purposes. Each SDT for these two projects outlined work necessary to address Misoperation of UVLS equipment. This work was deferred, at the time, because both PRC-010-1 and PRC-004-3 contained dependencies with other projects requiring their completion. This phase two is a continuation of the work performed under the Standards Authorization Request (SAR) for Project 2008-02.

The revisions proposed in Reliability Standard PRC-010-2 meet the following objectives:

- Address the UVLS Misoperation the remaining work due to the retirement of PRC-022-1 (*Undervoltage Load Shedding Program Performance*) during the development of PRC-010-1 (*Undervoltage Load Shedding*)

- Ensure the performance of the UVLS equipment (i.e., operation or non-operation) within the UVLS Program is assessed and, if necessary, mitigated

Basis for Revision

Originally, Misoperation of UVLS equipment was planned to be appended to a future version of PRC-004 (*Protection System Misoperation Identification and Correction*). The SDT is proposing a two-prong approach by revising both PRC-004 and PRC-010 to address the concern of identifying Misoperations of UVLS equipment in PRC-022-1.

First, the SDT proposes an addition to the Applicability section of PRC-004 to include UVLS that is intended to trip one or more Bulk Electric System (BES) Elements. This is consistent with previous communication to industry about addressing Misoperation of UVLS equipment.[1] Entities will be required to address UVLS that trips a BES Element similarly to other Protection Systems in PRC-004. While the revision to PRC-004 consistent with the communicated approach, the SDT determined that the proposed revision fails to address the performance (operation or non-operations) of UVLS Program equipment not covered by the strict processes of PRC-004.

Second, the SDT is proposing clarifying revisions in PRC-010-2, Requirements R4 and R5 to address UVLS Program equipment performance. These revisions are not requiring UVLS entities to address UVLS protective relays not covered by the strict processes of PRC-004; however, PRC-010-2 is requiring UVLS entities to address the deficiencies (e.g., Misoperations) identified in the assessment performed by Planning Coordinator or Transmission Planner in Requirement R4. Deficiencies include the performance (operation or non-operation) issues of UVLS Program equipment. These deficiencies, if any, are addressed by the UVLS entities through a Corrective Action Plan (CAP) developed in Requirement R5 and executed by the UVLS entities in Requirement R2 of PRC-010.

The term “Misoperation” as defined by the *Glossary of Terms Used in NERC Reliability Standards* is not used within the Requirements of PRC-010; however, the term is used in the Guidelines and Technical Basis section of the standard to provide clarity that UVLS Program equipment deficiencies include Misoperations that are to be corrected by UVLS entities. The PRC-010-2 Reliability Standard mandates that UVLS entities are to correct the deficiencies identified by the Planning Coordinator or Transmission Planner, such as Misoperation of UVLS equipment. Deficiencies are identified through either the periodic assessment or an assessment performed following an event and included in a CAP to the UVLS entity. The structure used by the SDT allows the Planning Coordinator and Transmission Planner to assess UVLS equipment for Misoperation under PRC-010 rather than the Generator Owner, Transmission Owner, and Distribution Provider applicable to the strict processes of PRC-004.

[1] Refer to Implementation Plan for PRC-010-1 (http://www.nerc.com/pa/stand/Pages/PRC0101RI.aspx) and PRC-010-1 (http://www.nerc.com/pa/Stand/Pages/ReliabilityStandards.aspx), Introduction in the Guidelines and Technical Basis, last paragraph.

The two-pronged approach ensures that any UVLS Program equipment containing a deficiency is identified and corrected under PRC-010 and UVLS that trips a BES Element is corrected under PRC-004 to address the requirements in the retired PRC-022-1.

A. Introduction

1. **Title: Protection System Misoperation Identification and Correction**

2. **Number:** PRC-004-5

3. **Purpose:** Identify and correct the causes of Misoperations of Protection Systems for Bulk Electric System (BES) Elements.

4. **Applicability:**

   4.1. Functional Entities:

   4.1.1 Transmission Owner

   4.1.2 Generator Owner

   4.1.3 Distribution Provider

   4.2. Facilities:

   4.2.1 Protection Systems for BES Elements, with the following exclusions:

   4.2.1.1 Non-protective functions that are embedded within a Protection System.

   4.2.1.2 Protective functions intended to operate as a control function during switching.[2]

   4.2.1.3 Special Protection Systems (SPS).

   4.2.1.4 Remedial Action Schemes (RAS).

   4.2.1.5 Protection Systems of individual dispersed power producing resources identified under Inclusion I4 of the BES definition where the Misoperations affected an aggregate nameplate rating of less than or equal to 75 MVA of BES Facilities.

   4.2.2 Underfrequency load shedding (UFLS) that is intended to trip one or more BES Elements.

   4.2.3 Undervoltage load shedding (UVLS) that is intended to trip one or more BES Elements.

5. **Effective Date:** See Project 2008-02.2 Implementation Plan.

[2] For additional information and examples, see the "Non-Protective Functions" and "Control Functions" sections in the Application Guidelines.

B. Requirements and Measures

R1. Each Transmission Owner, Generator Owner, and Distribution Provider that owns a BES interrupting device that operated under the circumstances in Parts 1.1 through 1.3 shall, within 120 calendar days of the BES interrupting device operation, identify whether its Protection System component(s) caused a Misoperation: *[Violation Risk Factor: Medium][Time Horizon: Operations Assessment, Operations Planning]*

1.1 The BES interrupting device operation was caused by a Protection System or by manual intervention in response to a Protection System failure to operate; and

1.2 The BES interrupting device owner owns all or part of the Composite Protection System; and

1.3 The BES interrupting device owner identified that its Protection System component(s) caused the BES interrupting device(s) operation or was caused by manual intervention in response to its Protection System failure to operate.

M1. Each Transmission Owner, Generator Owner, and Distribution Provider shall have dated evidence that demonstrates it identified the Misoperation of its Protection System component(s), if any, that meet the circumstances in Requirement R1, Parts 1.1, 1.2, and 1.3 within the allotted time period. Acceptable evidence for Requirement R1, including Parts 1.1, 1.2, and 1.3 may include, but is not limited to the following dated documentation (electronic or hardcopy format): reports, databases, spreadsheets, emails, facsimiles, lists, logs, records, declarations, analyses of sequence of events, relay targets, Disturbance Monitoring Equipment (DME) records, test results, or transmittals.

R2. Each Transmission Owner, Generator Owner, and Distribution Provider that owns a BES interrupting device that operated shall, within 120 calendar days of the BES interrupting device operation, provide notification as described in Parts 2.1 and 2.2. *[Violation Risk Factor: Medium][Time Horizon: Operations Assessment, Operations Planning]*

2.1 For a BES interrupting device operation by a Composite Protection System or by manual intervention in response to a Protection System failure to operate, notification of the operation shall be provided to the other owner(s) that share Misoperation identification responsibility for the Composite Protection System under the following circumstances:

2.1.1 The BES interrupting device owner shares the Composite Protection System ownership with any other owner; and

2.1.2 The BES interrupting device owner has determined that a Misoperation occurred or cannot rule out a Misoperation; and

2.1.3 The BES interrupting device owner has determined that its Protection System component(s) did not cause the BES interrupting device(s) operation or cannot determine whether its Protection System components caused the BES interrupting device(s) operation.

2.2 For a BES interrupting device operation by a Protection System component intended to operate as backup protection for a condition on another entity's BES Element, notification of the operation shall be provided to the other Protection System owner(s) for which that backup protection was provided.

M2. Each Transmission Owner, Generator Owner, and Distribution Provider shall have dated evidence that demonstrates notification to the other owner(s), within the allotted time period for either Requirement R2, Part 2.1, including subparts 2.1.1, 2.1.2, and 2.1.3 and Requirement R2, Part 2.2. Acceptable evidence for Requirement R2, including Parts 2.1 and 2.2 may include, but is not limited to the following dated documentation (electronic or hardcopy format): emails, facsimiles, or transmittals.

R3. Each Transmission Owner, Generator Owner, and Distribution Provider that receives notification, pursuant to Requirement R2 shall, within the later of 60 calendar days of notification or 120 calendar days of the BES interrupting device(s) operation, identify whether its Protection System component(s) caused a Misoperation. *[Violation Risk Factor: Medium][Time Horizon: Operations Assessment, Operations Planning]*

M3. Each Transmission Owner, Generator Owner, and Distribution Provider shall have dated evidence that demonstrates it identified whether its Protection System component(s) caused a Misoperation within the allotted time period. Acceptable evidence for Requirement R3 may include, but is not limited to the following dated documentation (electronic or hardcopy format): reports, databases, spreadsheets, emails, facsimiles, lists, logs, records, declarations, analyses of sequence of events, relay targets, DME records, test results, or transmittals.

R4. Each Transmission Owner, Generator Owner, and Distribution Provider that has not determined the cause(s) of a Misoperation, for a Misoperation identified in accordance with Requirement R1 or R3, shall perform investigative action(s) to determine the cause(s) of the Misoperation at least once every two full calendar quarters after the Misoperation was first identified, until one of the following completes the investigation: *[Violation Risk Factor: Medium] [Time Horizon: Operations Assessment, Operations Planning]*

- The identification of the cause(s) of the Misoperation; or
- A declaration that no cause was identified.

M4. Each Transmission Owner, Generator Owner, and Distribution Provider shall have dated evidence that demonstrates it performed at least one investigative action according to Requirement R4 every two full calendar quarters until a cause is identified or a declaration is made. Acceptable evidence for Requirement R4 may include, but is not limited to the following dated documentation (electronic or hardcopy format): reports, databases, spreadsheets, emails, facsimiles, lists, logs, records, declarations, analyses of sequence of events, relay targets, DME records, test results, or transmittals.

R5. Each Transmission Owner, Generator Owner, and Distribution Provider that owns the Protection System component(s) that caused the Misoperation shall, within 60 calendar days of first identifying a cause of the Misoperation: [*Violation Risk Factor: Medium*] [*Time Horizon: Operations Planning, Long-Term Planning*]

- Develop a Corrective Action Plan (CAP) for the identified Protection System component(s), and an evaluation of the CAP's applicability to the entity's other Protection Systems including other locations; or
- Explain in a declaration why corrective actions are beyond the entity's control or would not improve BES reliability, and that no further corrective actions will be taken.

M5. Each Transmission Owner, Generator Owner, and Distribution Provider shall have dated evidence that demonstrates it developed a CAP and an evaluation of the CAP's applicability to other Protection Systems and locations, or a declaration in accordance with Requirement R5. Acceptable evidence for Requirement R5 may include, but is not limited to the following dated documentation (electronic or hardcopy format): CAP and evaluation, or declaration.

R6. Each Transmission Owner, Generator Owner, and Distribution Provider shall implement each CAP developed in Requirement R5, and update each CAP if actions or timetables change, until completed. *[Violation Risk Factor: Medium][Time Horizon: Operations Planning, Long-Term Planning]*

M6. Each Transmission Owner, Generator Owner, and Distribution Provider shall have dated evidence that demonstrates it implemented each CAP, including updating actions or timetables. Acceptable evidence for Requirement R6 may include, but is not limited to the following dated documentation (electronic or hardcopy format): records that document the implementation of each CAP and the completion of actions for each CAP including revision history of each CAP. Evidence may also include work management program records, work orders, and maintenance records.

C. Compliance

1. Compliance Monitoring Process

1.1. Compliance Enforcement Authority

As defined in the NERC Rules of Procedure, "Compliance Enforcement Authority" (CEA) means NERC or the Regional Entity in their respective roles of monitoring and enforcing compliance with the NERC Reliability Standards.

1.2. Evidence Retention

The following evidence retention periods identify the period of time an entity is required to retain specific evidence to demonstrate compliance. For instances where the evidence retention period specified below is shorter than the time since the last audit, the CEA may ask an entity to provide other evidence to show that it was compliant for the full time period since the last audit.

The Transmission Owner, Generator Owner, and Distribution Provider shall keep data or evidence to show compliance as identified below unless directed by its CEA to retain specific evidence for a longer period of time as part of an investigation.

The Transmission Owner, Generator Owner, and Distribution Provider shall retain evidence of Requirements R1, R2, R3, and R4, Measures M1, M2, M3, and M4 for a minimum of 12 calendar months following the completion of each Requirement.

The Transmission Owner, Generator Owner, and Distribution Provider shall retain evidence of Requirement R5, Measure M5, including any supporting analysis per Requirements R1, R2, R3, and R4, for a minimum of 12 calendar months following completion of each CAP, completion of each evaluation, and completion of each declaration.

The Transmission Owner, Generator Owner, and Distribution Provider shall retain evidence of Requirement R6, Measure M6 for a minimum of 12 calendar months following completion of each CAP.

If a Transmission Owner, Generator Owner, or Distribution Provider is found non-compliant, it shall keep information related to the non-compliance until mitigation is complete and approved, or for the time specified above, whichever is longer.

The CEA shall keep the last audit records and all requested and submitted subsequent audit records.

1.3. Compliance Monitoring and Assessment Processes

Compliance Audit

Self-Certification

Spot Checking

Compliance Investigation

Self-Reporting

Complaint

1.4. Additional Compliance Information

None.

D. Table of Compliance Elements

R#	Time Horizon	VRF	Violation Severity Levels			
			Lower VSL	Moderate VSL	High VSL	Severe VSL
R1	Operations Assessment, Operations Planning	Medium	The responsible entity identified whether its Protection System component(s) caused a Misoperation in accordance with Requirement R1, but in more than 120 calendar days and less than or equal to 150 calendar days of the BES interrupting device operation.	The responsible entity identified whether its Protection System component(s) caused a Misoperation in accordance with Requirement R1, but in more than 150 calendar days and less than or equal to 165 calendar days of the BES interrupting device operation.	The responsible entity identified whether its Protection System component(s) caused a Misoperation in accordance with Requirement R1, but in more than 165 calendar days and less than or equal to 180 calendar days of the BES interrupting device operation.	The responsible entity identified whether its Protection System component(s) caused a Misoperation in accordance with Requirement R1, but in more than 180 calendar days of the BES interrupting device operation. OR The responsible entity failed to identify whether its Protection System component(s) caused a Misoperation in accordance with Requirement R1.

R#	Time Horizon	VRF	Violation Severity Levels			
			Lower VSL	Moderate VSL	High VSL	Severe VSL
R2	Operations Assessment, Operations Planning	Medium	The responsible entity notified the other owner(s) of the Protection System component(s) in accordance with Requirement R2, but in more than 120 calendar days and less than or equal to 150 calendar days of the BES interrupting device operation.	The responsible entity notified the other owner(s) of the Protection System component(s) in accordance with Requirement R2, but in more than 150 calendar days and less than or equal to 165 calendar days of the BES interrupting device operation.	The responsible entity notified the other owner(s) of the Protection System component(s) in accordance with Requirement R2, but in more than 165 calendar days and less than or equal to 180 calendar days of the BES interrupting device operation.	The responsible entity notified the other owner(s) of the Protection System component(s) in accordance with Requirement R2, but in more than 180 calendar days of the BES interrupting device operation. OR The responsible entity failed to notify one or more of the other owner(s) of the Protection System component(s) in accordance with Requirement R2.

R#	Time Horizon	VRF	Violation Severity Levels			
			Lower VSL	Moderate VSL	High VSL	Severe VSL
R3	Operations Assessment, Operations Planning	Medium	The responsible entity identified whether or not its Protection System component(s) caused a Misoperation in accordance with Requirement R3, but was less than or equal to 30 calendar days late.	The responsible entity identified whether or not its Protection System component(s) caused a Misoperation in accordance with Requirement R3, but was greater than 30 calendar days and less than or equal to 45 calendar days late.	The responsible entity identified whether or not its Protection System component(s) caused a Misoperation in accordance with Requirement R3, but was greater than 45 calendar days and less than or equal to 60 calendar days late.	The responsible entity identified whether or not its Protection System component(s) caused a Misoperation in accordance with Requirement R3, but was greater than 60 calendar days late. OR The responsible entity failed to identify whether or not a Misoperation of its Protection System component(s) occurred in accordance with Requirement R3.

R#	Time Horizon	VRF	Violation Severity Levels			
			Lower VSL	Moderate VSL	High VSL	Severe VSL
R4	Operations Assessment, Operations Planning	Medium	The responsible entity performed at least one investigative action in accordance with Requirement R4, but was less than or equal to one calendar quarter late.	The responsible entity performed at least one investigative action in accordance with Requirement R4, but was greater than one calendar quarter and less than or equal to two calendar quarters late.	The responsible entity performed at least one investigative action in accordance with Requirement R4, but was greater than two calendar quarters and less than or equal to three calendar quarters late.	The responsible entity performed at least one investigative action in accordance with Requirement R4, but was more than three calendar quarters late. OR The responsible entity failed to perform investigative action(s) in accordance with Requirement R4.

R#	Time Horizon	VRF	Violation Severity Levels			
			Lower VSL	Moderate VSL	High VSL	Severe VSL
R5	Operations Planning, Long-Term Planning	Medium	The responsible entity developed a CAP, or explained in a declaration in accordance with Requirement R5, but in more than 60 calendar days and less than or equal to 70 calendar days of first identifying a cause of the Misoperation. OR (See next page)	The responsible entity developed a CAP, or explained in a declaration in accordance with Requirement R5, but in more than 70 calendar days and less than or equal to 80 calendar days of first identifying a cause of the Misoperation. OR (See next page)	The responsible entity developed a CAP, or explained in a declaration in accordance with Requirement R5, but in more than 80 calendar days and less than or equal to 90 calendar days of first identifying a cause of the Misoperation. OR (See next page)	The responsible entity developed a CAP, or explained in a declaration in accordance with Requirement R5, but in more than 90 calendar days of first identifying a cause of the Misoperation. OR The responsible entity failed to develop a CAP or explain in a declaration in accordance with Requirement R5. OR (See next page)

R#	Time Horizon	VRF	Violation Severity Levels			
			Lower VSL	Moderate VSL	High VSL	Severe VSL
R5	(Continued)		The responsible entity developed an evaluation in accordance with Requirement R5, but in more than 60 calendar days and less than or equal to 70 calendar days of first identifying a cause of the Misoperation.	The responsible entity developed an evaluation in accordance with Requirement R5, but in more than 70 calendar days and less than or equal to 80 calendar days of first identifying a cause of the Misoperation.	The responsible entity developed an evaluation in accordance with Requirement R5, but in more than 80 calendar days and less than or equal to 90 calendar days of first identifying a cause of the Misoperation.	The responsible entity developed an evaluation in accordance with Requirement R5, but in more than 90 calendar days of first identifying a cause of the Misoperation. OR The responsible entity failed to develop an evaluation in accordance with Requirement R5.
R6	Operations Planning, Long-Term Planning	Medium	The responsible entity implemented, but failed to update a CAP, when actions or timetables changed, in accordance with Requirement R6.	N/A	N/A	The responsible entity failed to implement a CAP in accordance with Requirement R6.

E. Regional Variances

None.

F. Interpretations

None.

G. Associated Documents

NERC System Protection and Controls Subcommittee of the NERC Planning Committee, Assessment of Standards: PRC-003-1 – Regional Procedure for Analysis of Misoperations of Transmission and Generation Protection Systems, PRC-004-1 – Analysis and Mitigation of Transmission and Generation Protection Misoperations, PRC-016-1 – Special Protection System Misoperations, May 22, 2009.[3]

Version History

Version	Date	Action	Change Tracking
0	April 1, 2005	Effective Date	New
1	December 1, 2005	1. Changed incorrect use of certain hyphens (-) to "en dash" (–) and "em dash (—)." 2. Added "periods" to items where appropriate. 3. Changed "Timeframe" to "Time Frame" in item D, 1.2.	01/20/06
1a	February 17, 2011	Adopted by NERC Board of Trustees	Project 2009-17 interpretation adding Appendix 1 - Interpretation regarding applicability of standard to protection of radially connected transformers
1a	September 26, 2011	Appended FERC-approved interpretation of R1 and R3 to version 1	FERC's Order approving the interpretation of R1 and R3 is effective as of September 26, 2011

[3] (http://www.nerc.com/comm/PC/System%20Protection%20and%20Control%20Subcommittee%20SPCS%20DL/PRC-003-004-016%20Report.pdf).

Version	Date	Action	Change Tracking
2	August 5, 2010	Adopted by NERC Board of Trustees	Project 2010-12 modifications to address Order No. 693 Directives contained in paragraph 1469
2a	September 26, 2011	Appended FERC-approved interpretation of R1 and R3 to version 2	FERC's Order approving the interpretation of R1 and R3 is effective as of September 26, 2011
2.1a	February 9, 2012	Adopted by NERC Board of Trustees	Errata change under Project 2010-07 to add "…and generator interconnection Facility…"
3	August 14, 2014	Adopted by NERC Board of Trustees	Revision under Project 2010-05.1
4	November 13, 2014	Adopted by NERC Board of Trustees	Applicability revision under Project 2014-01 to clarify application of Requirements to BES dispersed power producing resources
5		Adopted by NERC Board of Trustees	Revision under Project 2008-02.2

Guidelines and Technical Basis

Introduction

This standard addresses the reliability issues identified in the letter[4] from Gerry Cauley, NERC President and CEO, dated January 7, 2011.

> "Nearly all major system failures, excluding perhaps those caused by severe weather, have misoperations of relays or automatic controls as a factor contributing to the propagation of the failure. …Relays can misoperate, either operate when not needed or fail to operate when needed, for a number of reasons. First, the device could experience an internal failure – but this is rare. Most commonly, relays fail to operate correctly due to incorrect settings, improper coordination (of timing and set points) with other devices, ineffective maintenance and testing, or failure of communications channels or power supplies. Preventable errors can be introduced by field personnel and their supervisors or more programmatically by the organization."

The standard also addresses the findings in the *2011 Risk Assessment of Reliability Performance*[5]; July 2011.

> "…a number of multiple outage events were initiated by protection system Misoperations. These events, which go beyond their design expectations and operating procedures, represent a tangible threat to reliability. A deeper review of the root causes of dependent and common mode events, which include three or more automatic outages, is a high priority for NERC and the industry."

The *State of Reliability 2014*[6] report continued to identify Protection System Misoperations as a significant contributor to automatic transmission outage severity. The report recommended completion of the development of PRC-004-3 as part of the solution to address Protection System Misoperations.

Definitions

The Misoperation definition is based on the IEEE/PSRC Working Group I3 "Transmission Protective Relay System Performance Measuring Methodology[7]." Misoperations of a Protection System include failure to operate, slowness in operating, or operating when not required either during a Fault or non-Fault condition.

---

[4] (http://www.nerc.com/pa/Stand/Project%20201005%20Protection%20System%20Misoperations%20DL/20110209130708-Cauley%20letter.pdf).

[5] "2011 Risk Assessment of Reliability Performance." NERC. (http://www.nerc.com/files/2011_RARPR_FINAL.pdf. July 2011). Pg. 3.

[6] "State of Reliability 2014." NERC. (http://www.nerc.com/pa/Stand/Pages/RelaibilityCoordinationProject20066.aspx). May 2014. Pg. 18 of 106.

[7] "Transmission Protective Relay System Performance Measuring Methodology." Working Group I3 of Power System Relaying Committee of IEEE Power Engineering Society. 1999.

For reference, a "Protection System" is defined in the *Glossary of Terms Used in NERC Reliability Standards* ("NERC Glossary") as:

- Protective relays which respond to electrical quantities,
- Communications systems necessary for correct operation of protective functions,
- Voltage and current sensing devices providing inputs to protective relays,
- Station dc supply associated with protective functions (including station batteries, battery chargers, and non-battery-based dc supply), and
- Control circuitry associated with protective functions through the trip coil(s) of the circuit breakers or other interrupting devices.

A BES interrupting device is a BES Element, typically a circuit breaker or circuit switcher that has the capability to interrupt fault current. Although BES interrupting device mechanisms are not part of a Protection System, the standard uses the operation of a BES interrupting device by a Protection System to initiate the review for Misoperation.

The following two definitions are being proposed for inclusion in the NERC Glossary:

> **Composite Protection System –** *The total complement of Protection System(s) that function collectively to protect an Element. Backup protection provided by a different Element's Protection System(s) is excluded.*

The Composite Protection System definition is based on the principle that an Element's multiple layers of protection are intended to function collectively. This definition has been introduced in this standard and incorporated into the proposed definition of Misoperation to clarify that the overall performance of an Element's total complement of protection should be considered while evaluating an operation.

Composite Protection System – Line Example

The Composite Protection System of the Alpha-Beta line (Circuit #123) is comprised of current differential, permissive overreaching transfer trip (POTT), step distance (classic zone 1, zone 2, and zone 3), instantaneous-overcurrent, time-overcurrent, out-of-step, and overvoltage protection. The protection is housed at the Alpha and Beta substations, and includes the associated relays, communications systems, voltage and current sensing devices, DC supplies, and control circuitry.

Composite Protection System – Transformer Example

The Composite Protection System of the Alpha transformer (#2) is comprised of internal differential, overall differential, instantaneous-overcurrent, and time-overcurrent protection. The protection is housed at the Alpha substation, and includes the associated relays, voltage and current sensing devices, DC supplies, and control circuitry.

Composite Protection System – Generator Example

The Composite Protection System of the Beta generator (#3) is comprised of generator differential, overall differential, overcurrent, stator ground, reverse power, volts per hertz, loss-of-field, and undervoltage protection. The protection is housed at the Beta generating plant and at the Beta substation, and includes the associated relays, voltage and current sensing devices, DC supplies, and control circuitry.

Composite Protection System – Breaker Failure Example

Breaker failure protection provides backup protection for the breaker, and therefore is part of the breaker's Composite Protection System. Considering breaker failure protection to be part of another Element's Composite Protection System could lead to an incorrect conclusion that a breaker failure operation automatically satisfies the "Slow Trip" criteria of the Misoperation definition.

- An example of a correct operation of the breaker's Composite Protection System is when the breaker failure relaying tripped because the line relaying operated, but the breaker failed to clear the Fault. The breaker failure relaying operated because of a failed trip coil. The failed trip coil caused a Misoperation of the line's Composite Protection System.
- An example of a correct operation of the breaker's Composite Protection System is when the breaker failure relaying tripped because the line relaying operated, but the breaker failed to clear the Fault. Only the breaker failure relaying operated because of a failed breaker mechanism. This was not a Misoperation because the breaker mechanism is not part of the breaker's Composite Protection System.
- An example of an "Unnecessary Trip – During Fault" is when the breaker failure relaying tripped at the same time as the line relaying during a Fault. The Misoperation was due to the breaker failure timer being set to zero.

Misoperation – *The failure a Composite Protection System to operate as intended for protection purposes. Any of the following is a Misoperation:*

1. **Failure to Trip – During Fault** – *A failure of a Composite Protection System to operate for a Fault condition for which it is designed. The failure of a Protection System component is not a Misoperation as long as the performance of the Composite Protection System is correct.*
2. ***Failure to Trip – Other Than Fault*** *– A failure of a Composite Protection System to operate for a non-Fault condition for which it is designed, such as a power swing, undervoltage, overexcitation, or loss of excitation. The failure of a Protection System component is not a Misoperation as long as the performance of the Composite Protection System is correct.*

3. ***Slow Trip – During Fault*** *– A Composite Protection System operation that is slower than required for a Fault condition if the duration of its operating time resulted in the operation of at least one other Element's Composite Protection System.*
4. ***Slow Trip – Other Than Fault*** *– A Composite Protection System operation that is slower than required for a non-Fault condition, such as a power swing, undervoltage, overexcitation, or loss of excitation, if the duration of its operating time resulted in the operation of at least one other Element's Composite Protection System.*
5. ***Unnecessary Trip – During Fault*** *– An unnecessary Composite Protection System operation for a Fault condition on another Element.*
6. ***Unnecessary Trip – Other Than Fault*** *– An unnecessary Composite Protection System operation for a non-Fault condition. A Composite Protection System operation that is caused by personnel during on-site maintenance, testing, inspection, construction, or commissioning activities is not a Misoperation.*

The Misoperation definition is based on the principle that an Element's total complement of protection is intended to operate dependably and securely.

- Failure to automatically reclose after a Fault condition is not included as a Misoperation because reclosing equipment is not included within the definition of Protection System.
- A breaker failure operation does not, in itself, constitute a Misoperation.
- A remote backup operation resulting from a "Failure to Trip" or a "Slow Trip" does not, in itself, constitute a Misoperation.

This proposed definition of Misoperation provides additional clarity over the current version. A Misoperation is the failure of a Composite Protection System to operate as intended for protection purposes. The definition includes six categories which provide further differentiation of what constitutes a Misoperation. These categories are discussed in greater detail in the following sections.

Failure to Trip – During Fault

This category of Misoperation typically results in the Fault condition being cleared by remote backup Protection System operation.

> **Example 1a:** A failure of a transformer's Composite Protection System to operate for a transformer Fault is a Misoperation.
>
> **Example 1b:** A failure of a "primary" transformer relay (or any other component) to operate for a transformer Fault is not a "Failure to Trip – During Fault" Misoperation as long as another component of the transformer's Composite Protection System operated.
>
> **Example 1c:** A lack of target information does not by itself constitute a Misoperation. When a high-speed pilot system does not target because a high-speed zone element trips first, it would not in and of itself be a Misoperation.

Example 1d: A failure of an overall differential relay to operate is not a "Failure to Trip – During Fault" Misoperation as long as another component such as a generator differential relay operated.

Example 1e: The Composite Protection System for a bus does not operate during a bus Fault which results in the operation of all local transformer Protection Systems connected to that bus and all remote line Protection Systems connected to that bus isolating the faulted bus from the grid. The operation of the local transformer Protection Systems and the operation of all remote line Protection Systems correctly provided backup protection. There is one "Failure to Trip – During Fault" Misoperation of the bus Composite Protection System.

In analyzing the Protection System for Misoperation, the entity must also consider whether the "Slow Trip – During Fault" category applies to the operation.

Failure to Trip – Other Than Fault

This category of Misoperation may have resulted in operator intervention. The "Failure to Trip – Other Than Fault" conditions cited in the definition are examples only, and do not constitute an all-inclusive list.

Example 2a: A failure of a generator's Composite Protection System to operate for an unintentional loss of field condition is a Misoperation.

Example 2b: A failure of an overexcitation relay (or any other component) is not a "Failure to Trip – Other Than Fault" Misoperation as long as the generator's Composite Protection System operated as intended isolating the generator from the BES.

In analyzing the Protection System for Misoperation, the entity must also consider whether the "Slow Trip – Other Than Fault" category applies to the operation.

Slow Trip – During Fault

This category of Misoperation typically results in remote backup Protection System operation before the Fault is cleared.

Example 3a: A Composite Protection System that is slower than required for a Fault condition is a Misoperation if the duration of its operating time resulted in the operation of at least one other Element's Composite Protection System. The current differential element of a multiple function relay failed to operate for a line Fault. The same relay's time-overcurrent element operated after a time delay. However, an adjacent line also operated from a time-overcurrent element. The faulted line's time-overcurrent element was found to be set to trip too slowly.

Example 3b: A failure of a breaker's Composite Protection System to operate as quickly as intended to meet the expected critical Fault clearing time for a line Fault in conjunction with a breaker failure (i.e., stuck breaker) is a Misoperation if it resulted in an unintended operation of at least one other Element's Composite Protection System. If a generating unit's Composite Protection System operates due to instability caused by the slow trip of the breaker's Composite Protection System, it is not an "Unnecessary Trip – During Fault" Misoperation of the generating unit's Composite Protection System. This event would be a "Slow Trip – During Fault" Misoperation of the breaker's Composite Protection System.

Example 3c: A line connected to a generation interconnection station is protected with two independent high-speed pilot systems. The Composite Protection System for this line also includes step distance and time-overcurrent schemes in addition to the two pilot systems. During a Fault on this line, the two pilot systems fail to operate and the time-overcurrent scheme operates clearing the Fault with no generating units or other Elements tripping (i.e., no over-trips). This event is not a Misoperation.

The phrase "slower than required" means the duration of its operating time resulted in the operation of at least one other Element's Composite Protection System. It would be impractical to provide a precise tolerance in the definition that would be applicable to every type of Protection System. Rather, the owner(s) reviewing each Protection System operation should understand whether the speed and outcome of its Protection System operation met their objective. The intent is not to require documentation of exact Protection System operation times, but to assure consideration of relay coordination and system stability by the owner(s) reviewing each Protection System operation.

The phrase "resulted in the operation of any other Composite Protection System" refers to the need to ensure that relaying operates in the proper or planned sequence (i.e., the primary relaying for a faulted Element operates before the remote backup relaying for the faulted Element).

In analyzing the Protection System for Misoperation, the entity must also consider the "Unnecessary Trip – During Fault" category to determine if an "unnecessary trip" applies to the Protection System operation of an Element other than the faulted Element.

If a coordination error was at the local terminal (i.e., set too slow), then it was a "Slow Trip," category of Misoperation at the local terminal.

Slow Trip – Other Than Fault

The phrase "slower than required" means the duration of its operating time resulted in the operation of at least one other Element's Composite Protection System. It would be impractical to provide a precise tolerance in the definition that would be applicable to every type of Protection System. Rather, the owner(s) reviewing each Protection System operation should understand whether the speed and outcome of its Protection System operation met their objective. The intent is not to require documentation of exact Protection System operation

times, but to assure consideration of relay coordination and system stability by the owner(s) reviewing each Protection System operation.

> **Example 4:** A phase to phase fault occurred on the terminals of a generator. The generator's Composite Protection System and a transmission line's Composite Protection System both operated in response to the fault. It was found during subsequent investigation that the generator protection contained an inappropriate time delay. This caused the transmission line's correctly set overreaching zone of protection to operate. This was a Misoperation of the generator's Composite Protection System, but not of the transmission line's Composite Protection System.

The "Slow Trip – Other Than Fault" conditions cited in the definition are examples only, and do not constitute an all-inclusive list.

Unnecessary Trip – During Fault

An operation of a properly coordinated remote Protection System is not in and of itself a Misoperation if the Fault has persisted for a sufficient time to allow the correct operation of the Composite Protection System of the faulted Element to clear the Fault. A BES interrupting device failure, a "failure to trip" Misoperation, or a "slow trip" Misoperation may result in a proper remote Protection System operation.

> **Example 5:** An operation of a transformer's Composite Protection System which trips (i.e., over-trips) for a properly cleared line Fault is a Misoperation. The Fault is cleared properly by the faulted equipment's Composite Protection System (i.e., line relaying) without the need for an external Protection System operation resulting in an unnecessary trip of the transformer protection; therefore, the transformer Protection System operation is a Misoperation.
>
> **Example 5b:** An operation of a line's Composite Protection System which trips (i.e., over-trips) for a properly cleared Fault on a different line is a Misoperation. The Fault is cleared properly by the faulted line's Composite Protection System (i.e., line relaying); however, elsewhere in the system, a carrier blocking signal is not transmitted (e.g., carrier ON/OFF switch found in OFF position) resulting in the operation of a remote Protection System, single-end trip of a non-faulted line. The operation of the Protection System for the non-faulted line is an unnecessary trip during a Fault. Therefore, the non-faulted line Protection System operation is an "Unnecessary Trip – During Fault" Misoperation.
>
> **Example 5c:** If a coordination error was at the remote terminal (i.e., set too fast), then it was an "Unnecessary Trip – During Fault" category of Misoperation at the remote terminal.

Unnecessary Trip – Other Than Fault

Unnecessary trips for non-Fault conditions include but are not limited to: power swings, overexcitation, loss of excitation, frequency excursions, and normal operations.

> **Example 6a:** An operation of a line's Composite Protection System due to a relay failure during normal operation is a Misoperation.
>
> **Example 6b:** Tripping a generator by the operation of the loss of field protection during an off-nominal frequency condition while the field is intact is a Misoperation assuming the Composite Protection System was not intended to operate under this condition.
>
> **Example 6c:** An impedance line relay trip for a power swing that entered the relay's characteristic is a Misoperation if the power swing was stable and the relay operated because power swing blocking was enabled and should have prevented the trip, but did not.
>
> **Example 6d:** Tripping a generator operating at normal load by the operation of a reverse power protection relay due to a relay failure is a Misoperation.

Additionally, an operation that occurs during a non-Fault condition but was initiated directly by on-site (i.e., real-time) maintenance, testing, inspection, construction, or commissioning is not a Misoperation.

> **Example 6e:** A BES interrupting device operation that occurs at the remote end of a line during a non-Fault condition because a direct transfer trip was initiated by system maintenance and testing activities at the local end of the line is not a Misoperation because of the maintenance exclusion in category 6 of the definition of "Misoperation."

The "on-site" activities at one location that initiates a trip to another location are included in this exemption. This includes operation of a Protection System when energizing equipment to facilitate measurements, such as verification of current circuits as a part of performing commissioning; however, once the maintenance, testing, inspection, construction, or commissioning activity associated with the Protection System is complete, the "on-site" Misoperation exclusion no longer applies, regardless of the presence of on-site personnel.

Special Cases

Protection System operations for these cases would not be a Misoperation.

> **Example 7a:** A generator Protection System operation prior to closing the unit breaker(s) is not a Misoperation provided no in-service Elements are tripped.

This type of operation is not a Misoperation because the generating unit is not synchronized and is isolated from the BES. Protection System operations that occur when the protected Element is out of service and that do not trip any in-service Elements are not Misoperations.

In some cases where zones of protection overlap, the owner(s) of Elements may decide to allow a Protection System to operate faster in order to gain better overall Protection System performance for an Element.

Example 7b: The high-side of a transformer connected to a line may be within the zone of protection of the supplying line's relaying. In this case, the line relaying is planned to protect the area of the high-side of the transformer and into its primary winding. In order to provide faster protection for the line, the line relaying may be designed and set to operate without direct coordination (or coordination is waived) with local protection for Faults on the high-side of the connected transformer. Therefore, the operation of the line relaying for a high-side transformer Fault operated as intended and would not be a Misoperation.

Below are examples of conditions that would be a Misoperation.

Example7c: A 230 kV shunt capacitor bank was released for operational service. The capacitor bank trips due to a settings error in the capacitor bank differential relay upon energization.

Example 7d: A 230/115 kV BES transformer bank trips out when being re-energized due to an incorrect operation of the transformer differential relay for inrush after being released for operational service. Only the high-side breaker opens since the low-side breaker had not yet been closed.

Non-Protective Functions

BES interrupting device operations which are initiated by non-protective functions, such as those associated with generator controls, excitation controls, or turbine/boiler controls, static voltampere-reactive compensators (SVC), flexible ac transmission systems (FACTS), high-voltage dc (HVdc) transmission systems, circuit breaker mechanisms, or other facility control systems are not operations of a Protection System. The standard is not applicable to non-protective functions such as automation (e.g., data collection) or control functions that are embedded within a Protection System.

Control Functions

The entity must make a determination as to whether the standard is applicable to each operation of its Protection System in accordance with the provided exclusions in the standard's Applicability, see Section 4.2.1. The subject matter experts (SME) developing this standard recognize that entities use Protection Systems as part of a routine practice to control BES Elements. This standard is not applicable to operation of protective functions within a Protection System when intended for controlling a BES Element as a part of an entity's process or planned switching sequence. The following are examples of conditions to which this standard is not applicable:

Example 8a: The reverse power protective function that operates to remove a generating unit from service using the entity's normal or routine process.

Example 8b: The reverse power relay enables a permissive trip and the generator operator trips the unit.

The standard is not applicable to operation of the protective relay because its operation is intended as a control function as part of a controlled shutdown sequence for the generator. However, the standard remains applicable to operation of the reverse power relay when it operates for conditions not associated with the controlled shutdown sequence, such as a motoring condition caused by a trip of the prime mover.

The following is another example of a condition to which this standard is not applicable:

> **Example 8c:** Operation of a capacitor bank interrupting device for voltage control using functions embedded within a microprocessor based relay that is part of a Protection System.

The above are examples only, and do not constitute an all-inclusive list to which the standard is not applicable.

Extenuating Circumstances

In the event of a natural disaster or other extenuating circumstances, the December 20, 2012 Sanction Guidelines of the North American Electric Reliability Corporation, Section 2.8, Extenuating Circumstances, reads: “In unique extenuating circumstances causing or contributing to the violation, such as significant natural disasters, NERC or the Regional Entity may significantly reduce or eliminate Penalties.” The Regional Entities to whom NERC has delegated authority will consider extenuating circumstances when considering any sanctions in relation to the timelines outlined in this standard.

The volume of Protection System operations tend to be sporadic. If a high rate of Protection System operations is not sustained, utilities will have an opportunity to catch up within the 120 day period.

Requirement Time Periods

The time periods within all the Requirements are distinct and separate. The applicable entity in Requirement R1 has 120 calendar days to identify whether a BES interrupting device operation is a Misoperation. Once the applicable entity has identified a Misoperation, it has completed its performance under Requirement R1. Identified Misoperations without an identified cause become subject to Requirement R4 and any subsequent Requirements as necessary. Identified Misoperations with an identified cause become subject to Requirement R5 and any subsequent Requirements as necessary.

In Requirement R2, the applicable entity has 120 calendar days, based on the date of the BES interrupting device operation, to provide notification to the other Protection System owners that meet the circumstances in Parts 2.1 and 2.2. For the case of an applicable entity that was notified (R3), it has the later of 120 calendar days from the date of the BES interrupting device operation or 60 calendar days of notification to identify whether its Protection System components caused a Misoperation.

Once a Misoperation is identified in either Requirement R1 or R3, and the applicable entity did not identify the cause(s) of the Misoperation, the time period for performing at least one investigative action every two full calendar quarters begins. The time period(s) in Requirement R4 resets upon each period. When the applicable entity's investigative actions identify the cause of the identified Misoperation or the applicable entity declares that no cause was found, the applicable entity has completed its performance in Requirement R4.

The time period in Requirement R5 begins when the Misoperation cause is first identified. The applicable entity is allotted 60 calendar days to perform one of the two activities listed in Requirement R5 (e.g., CAP or declaration) to complete its performance under Requirement R5.

Requirement R6 time period is determined by the actions and the associated timetable to complete those actions identified in the CAP. The time periods contained in the CAP may change from time to time and the applicable entity is required to update the timetable when it changes.

Time periods provided in the Requirements are intended to provide a reasonable amount of time to perform each Requirement. Performing activities in the least amount of time facilitates prompt identification of Misoperations, notification to other Protection System owners, identification of the cause(s), correction of the cause(s), and that important information is retained that may be lost due to time.

Requirement R1

This Requirement initiates a review of each BES interrupting device operation to identify whether or not a Misoperation may have occurred. Since the BES interrupting device owner typically monitors and tracks device operations, the owner is the logical starting point for identifying Misoperations of Protection Systems for BES Elements. A review is required when (1) a BES interrupting device operates that is caused by a Protection System or by manual intervention in response to a Protection System failure to operate, (2) regardless of whether the owner owns all or part of the Protection System component(s), and (3) the owner identified its Protection System component(s) as causing the BES interrupting device operation or was caused by manual intervention in response to its Protection System failure to operate.

Since most Misoperations result in the operation of one or more BES interrupting devices, these operations initiate a review to identify any Misoperation. If an Element is manually isolated in response to a failure to operate, the manual isolation of the Element triggers a review for Misoperation.

> **Example R1a:** The failure of a loss of field relay on a generating unit where an operator takes action to isolate the unit.

Manual intervention may indicate a Misoperation has occurred, thus requiring the initiation of an investigation by the BES interrupting device owner.

For the case where a BES interrupting device did not operate and remote clearing occurs due to the failure of a Composite Protection System to operate, the BES interrupting device owner would still review the operation under Requirement R1. However, if the BES interrupting device

owner determines that its Protection System component operated as backup protection for a condition on another entity's BES Element, the owner would provide notification of the operation to the other Protection System owner(s) under Requirement R2, Part 2.2.

Protection Systems are made of many components. These components may be owned by different entities. For example, a Generator Owner may own a current transformer that sends information to a Transmission Owner's differential relay. All of these components and many more are part of a Protection System. It is expected that all of the owners will communicate with each other, sharing information freely, so that Protection System operations can be analyzed, Misoperations identified, and corrective actions taken.

Each entity is expected to use judgment to identify those Protection System operations that meet the definition of Misoperation regardless of the level of ownership. A combination of available information from resources such as counters, relay targets, Supervisory Control and Data Acquisition (SCADA) systems, or DME would typically be used to determine whether or not a Misoperation occurred. The intent of the standard is to classify an operation as a Misoperation if the available information leads to that conclusion. In many cases, it will not be necessary to leverage all available data to determine whether or not a Misoperation occurred. The standard also allows an entity to classify an operation as a Misoperation if entity is not sure. The entity may decide to identify the operation as a Misoperation to satisfy Requirement R1 and continue its investigation for a cause of the Misoperation under Requirement R4. If the continued investigative actions are inconclusive, the entity may declare no cause found and end its investigation. The entity is allotted 120 calendar days from the date of its BES interrupting device operation to identify whether its Protection System component(s) caused a Misoperation.

The Protection System operation may be documented in a variety of ways such as in a report, database, spreadsheet, or list. The documentation may be organized in a variety of ways such as by BES interrupting device, protected Element, or Composite Protection System.

Repeated operations which occur during the same automatic reclosing sequence do not need a separate identification under Requirement R1. Repeated Misoperations which occur during the same 24-hour period do not need a separate identification under Requirement R1. This is consistent with the NERC *Misoperations Report*[8] which states:

> "In order to avoid skewing the data with these repeated events, the NERC SPCS should clarify, in the next annual update of the misoperation template, that all misoperations due to the same equipment and cause within a 24 hour period be recorded as one misoperation."

The following is an example of a condition that is not a Misoperation.

[8] "Misoperations Report." Reporting Multiple Occurrences. NERC Protection System Misoperations Task Force. (http://www.nerc.com/docs/pc/psmtf/PSMTF_Report.pdf). April 1, 2013. Pg. 37 of 40.

Example R1b: A high impedance Fault occurs within a transformer. The sudden pressure relaying detects and operates for the Fault, but the differential relaying did not operate due to the low Fault current levels. This is not a Misoperation because the Composite Protection System was not required to operate because the Fault was cleared by the sudden pressure relay.

Requirement R2

Requirement R2 ensures notification of those who have a role in identifying Misoperations, but were not accounted for within Requirement R1. In the case of multi-entity ownership, the entity that owns the BES interrupting device that operated is expected to use judgment to identify those Protection System operations that meet the definition of Misoperation under Requirement R1; however, if the entity that owns a BES interrupting device determines that its Protection System component(s) did not cause the BES interrupting device(s) operation or cannot determine whether its Protection System components caused the BES interrupting device(s) operation, it must notify the other Protection System owner(s) that share Misoperation identification responsibility when the criteria in Requirement R2 is met.

This Requirement does not preclude the Protection System owners from initially communicating and working together to determine whether a Misoperation occurred and, if so, the cause. The BES interrupting device owner is only required to officially notify the other owners when it: (1) shares the Composite Protection System ownership with other entity(ies), (2) determines that a Misoperation occurred or cannot rule out a Misoperation, and (3) determines its Protection System component(s) did not cause a Misoperation or is unsure. Officially notifying the other owners without performing a preliminary review may unnecessarily burden the other owners with compliance obligations under Requirement R3, redirect valuable resources, and add little benefit to reliability. The BES interrupting device owner should officially notify other owners when appropriate within the established time period.

The following is an example of a notification to another Protection System owner:

Example R2a: Circuit breakers A and B at the Charlie station tripped from directional comparison blocking (DCB) relaying on 03/03/2014 at 15:43 UTC during an external Fault. As discussed last week, the fault records indicate that a problem with your equipment (failure to transmit) caused the operation.

> **Example R2b:** A generator unit tripped out immediately upon synchronizing to the grid due to a Misoperation of its overcurrent protection. The Transmission Owner owns the 230 kV generator breaker that operated. The Transmission Owner, as the owner of the BES interrupting device after determining that its Protection System components did not cause the Misoperation, notified the Generator Owner of the operation. The Generator Owner investigated and determined that its Protection System components caused the Misoperation. In this example, the Generator Owner's Protection System components did cause the Misoperation. As the owner of the Protection System components that caused the Misoperation, the Generator Owner is responsible for creating and implementing the CAP.

A Composite Protection System owned by different functional entities within the same registered entity does not necessarily satisfy the notification criteria in Part 2.1.1 of Requirement R2. For example, if the same personnel within a registered entity perform the Misoperation identification for both the Generator Owner and Transmission Owner functions, then the Misoperation identification would be completely covered in Requirement R1, and therefore notification would not be required. However, if the Misoperation identification is handled by different groups, then notification would be required because the Misoperation identification would not necessarily be covered in Requirement R1.

> **Example R2c:** Line A Composite Protection System (owned by entity 1) failed to operate for an internal Fault. As a result, the zone 3 portion of Line B's Composite Protection System (owned by entity 2) and zone 3 portion of Line C's Composite Protection System (owned by entity 3) operated to clear the Fault. Entity 2 and 3 notified entity 1 of the remote zone 3 operation.

For the case where a BES interrupting device operates to provide backup protection for a non-BES Element, the entity reviewing the operation is not required to notify the other owners of Protection Systems for non-BES Elements. No notification is required because this Reliability Standard is not applicable to Protection Systems for non-BES Elements.

Requirement R3

For Requirement R3 (i.e., notification received), the entity that also owns a portion of the Composite Protection System is expected to use judgment to identify whether the Protection System operation is a Misoperation. A combination of available information from resources such as counters, relay targets, SCADA, DME, and information from the other owner(s) would typically be used to determine whether or not a Misoperation occurred. The intent of the standard is to classify an operation as a Misoperation if the available information leads to that conclusion. In many cases, it will not be necessary to leverage all available data to determine whether or not a Misoperation occurred. The standard also allows an entity to classify an operation as a Misoperation if an entity is not sure. The entity may decide to identify the operation as a Misoperation to satisfy Requirement R1 and continue its investigation for a cause of the Misoperation under Requirement R4. If the continued investigative actions are inconclusive, the entity may declare no cause found and end its investigation.

The entity that is notified by the BES interrupting device owner is allotted the later of 60 calendar days from receipt of notification or 120 calendar days from the BES interrupting device operation date to determine if its portion of the Composite Protection System caused the Protection System operation. It is expected that in most cases of a jointly owned Protection System, the entity making notification would have been in communication with the other owner(s) early in the process. This means that the shorter 60 calendar days only comes into play if the notification occurs in the second half of the 120 calendar days allotted to the BES interrupting device owner in Requirement R1.

The Protection System review may be organized in a variety of ways such as in a report, database, spreadsheet, or list. The documentation may be organized in a variety of ways such as by BES interrupting device, protected Element, or Composite Protection System. The BES interrupting device owner's notification received may be documented in a variety of ways such as an email or a facsimile.

Requirement R4

The entity in Requirement R4 (i.e., cause identification), whether it is the entity that owns the BES interrupting device or an entity that was notified, is expected to use due diligence in taking investigative action(s) to determine the cause(s) of an identified Misoperation for its portion of the Composite Protection System. The SMEs developing this standard recognize there will be cases where the cause(s) of a Misoperation will not be revealed during the allotted time periods in Requirements R1 or R3; therefore, Requirement R4 provides the entity a mechanism to continue its investigative work to determine the cause(s) of the Misoperation when the cause is not known.

A combination of available information from resources such as counters, relay targets, SCADA, DME, test results, and studies would typically be used to determine the cause of the Misoperation. At least one investigative action must be performed every two full calendar quarters until the investigation is completed.

The following is an example of investigative actions taken to determine the cause of an identified Misoperation:

> **Example R4a**: A Misoperation was identified on 03/18/2014. A line outage to test the Protection System was scheduled on 03/24/2014 for 12/15/2014 as the first investigative action (i.e., beyond the next two full calendar quarters) due to summer peak conditions. The protection engineer contacted the manufacturer on 04/10/2014 (i.e., within two full calendar quarters) to obtain any known issues. The engineer reviewed manufacturer's documents on 05/27/2014. The outage schedule was confirmed on 08/29/2014 and was taken on 12/15/2014. Testing was completed on 12/16/2014 (i.e., in the second two full quarters) revealing the microprocessor relay as the cause of the Misoperation. A CAP is being developed to replace the relay.

Periodic action minimizes compliance burdens and focuses the entity's effort on determining the cause(s) of the Misoperation while providing measurable evidence. The SMEs recognize

that certain planned investigative actions may require months or years to schedule and complete; therefore, the entity is only required to perform at least one investigative action every two full calendar quarters. If an investigative action is performed in the first quarter of a calendar year, the next investigative action would need to be performed by the end of the third calendar quarter. If an investigative action is performed in the last quarter of a calendar year, the next investigative action would need to be performed by the end of the second calendar quarter of the following calendar year. Investigative actions may include a variety of actions, such as reviewing DME records, performing or reviewing studies, completing relay calibration or testing, requesting manufacturer review, requesting an outage, or confirming a schedule.

The entity's investigation is complete when it identifies the cause of the Misoperation or makes a declaration that no cause was determined. The declaration is intended to be used if the entity determines that investigative actions have been exhausted or have not provided direction for identifying the Misoperation cause. Historically, approximately 12% of Misoperations are unknown or unexplainable.[9]

Although the entity only has to document its specific investigative actions taken to determine the cause(s) of an identified Misoperation, the entity should consider the benefits of formally organizing (e.g., in a report or database) its actions and findings. Well documented investigative actions and findings may be helpful in future investigations of a similar event or circumstances. A thorough report or database may contain a detailed description of the event, information gathered, investigative actions, findings, possible causes, identified causes, and conclusions. Multiple owners of a Composite Protection System might consider working together to produce a common report for their mutual benefit.

The following are examples of a declaration where no cause was determined:

> **Example R4b**: A Misoperation was identified on 04/11/2014. All relays at station A and B functioned properly during testing on 08/26/2014 as the first investigative action. The carrier system functioned properly during testing on 08/27/2014. The carrier coupling equipment functioned properly during testing on 08/28/2014. A settings review completed on 09/03/2014 indicated the relay settings were proper. Since the equipment involved in the operation functioned properly during testing, the settings were reviewed and found to be correct, and the equipment at station A and station B is already monitored. The investigation is being closed because no cause was found.
>
> **Example R4c:** A Misoperation was identified on 03/22/2014. The protection scheme was replaced before the cause was identified. The power line carrier or PLC based protection was replaced with fiber-optic based protection with an in-service date of 04/16/2014. The new system will be monitored for recurrence of the Misoperation.

[9] NERC System Protection and Control Subcommittee. Misoperations Report. April 1, 2013. (http://www.nerc.com/docs/pc/psmtf/PSMTF_Report.pdf). Figure 15: NERC Wide Misoperations by Cause Code. Pg. 22 of 40.

Requirement R5

Resolving the causes of Protection System Misoperations benefits BES reliability by preventing recurrence. The Corrective Action Plan (CAP) is an established tool for resolving operational problems. The NERC Glossary defines a Corrective Action Plan as, *"A list of actions and an associated timetable for implementation to remedy a specific problem."* Since a CAP addresses specific problems, the determination of what went wrong needs to be completed before developing a CAP. When the Misoperation cause is identified in Requirement R1, R3 or R4, Requirement R5 requires Protection System owner(s) to develop a CAP, or explain why corrective actions are beyond the entity's control or would not improve BES reliability. The entity must develop the CAP or make a declaration why additional actions are beyond the entity's control or would not improve BES reliability and that no further corrective actions will be taken within 60 calendar days of first determining a cause.

The SMEs developing this standard recognize there may be multiple causes for a Misoperation. In these circumstances, the CAP would include a remedy for the identified causes. The CAP may be revised if additional causes are found; therefore, the entity has the option to create a single or multiple CAP(s) to correct multiple causes of a Misoperation. The 60 calendar day period for developing a CAP (or declaration) is established on the basis of industry experience which includes operational coordination timeframes, time to consider alternative solutions, coordination of resources, and development of a schedule.

The development of a CAP is intended to document the specific corrective actions needed to be taken to prevent Misoperation recurrence, the timetable for executing such actions, and an evaluation of the CAP's applicability to the entity's other Protection Systems including other locations. The evaluation of these other Protection Systems aims to reduce the risk and likelihood of similar Misoperations in other Protection Systems. The Protection System owner is responsible for determining the extent of its evaluation concerning other Protection Systems and locations. The evaluation may result in the owner including actions to address Protection Systems at other locations or the reasoning for not taking any action. The CAP and an evaluation of other Protection Systems including other locations must be developed to complete Requirement R5.

The following is an example of a CAP for a relay Misoperation that was applying a standing trip due to a failed capacitor within the relay and the evaluation of the cause at similar locations which determined capacitor replacement was not necessary.

For completion of each CAP in Examples R5a through R5d, please see Examples R6a through R6d.

> **Example R5a:** Actions: Remove the relay from service. Replace capacitor in the relay. Test the relay. Return to service or replace by 07/01/2014.
>
> Applicability to other Protection Systems: This type of impedance relay has not been experiencing problems and is systematically being replaced with microprocessor relays as Protection Systems are modernized. Therefore, it was assessed that a program for wholesale preemptive replacement of capacitors in this type of impedance relay does not need to be established for the system.

The following is an example of a CAP for a relay Misoperation that was applying a standing trip due to a failed capacitor within the relay and the evaluation of the cause at similar locations which determined the capacitors need preemptive correction action.

> **Example R5b:** Actions: Remove the relay from service. Replace capacitor in the relay. Test the relay. Return to service or replace by 07/01/2014.
>
> Applicability to other Protection Systems: This type of impedance relay is suspected to have previously tripped at other locations because of the same type of capacitor issue. Based on the evaluation, a program should be established by 12/01/2014 for wholesale preemptive replacement of capacitors in this type of impedance relay.

The following is an example of a CAP for a relay Misoperation that was applying a standing trip due to a failed capacitor within the relay and the evaluation of the cause at similar locations which determined the capacitors need preemptive correction action.

> **Example R5c:** Actions: Remove the relay from service. Replace capacitor in the relay. Test the relay. Return to service or replace by 07/01/2014.
>
> Applicability to other Protection Systems: This type of impedance relay is suspected to have previously tripped at other locations because of the same type of capacitor issue. Based on the evaluation, the preemptive replacement of capacitors in this type of impedance relay should be pursued for the identified stations A through I by 04/30/2015.
>
> A plan is being developed to replace the impedance relay capacitors at stations A, B, and C by 09/01/2014. A second plan is being developed to replace the impedance relay capacitors at stations D, E, and F by 11/01/2014. The last plan will replace the impedance relay capacitors at stations G, H, and I by 02/01/2015.

The following is an example of a CAP for a relay Misoperation that was due to a version 2 firmware problem and the evaluation of the cause at similar locations which determined the firmware needs preemptive correction action.

> **Example R5d:** Actions: Provide the manufacturer fault records. Install new firmware pending manufacturer results by 10/01/2014.
>
> Applicability to other Protection Systems: Based on the evaluation of other locations and a risk assessment, the newer firmware version 3 should be installed at all installations that are identified to be version 2. Twelve relays were identified across the system. Proposed completion date is 12/31/2014.

The following are examples of a declaration made where corrective actions are beyond the entity's control or would not improve BES reliability and that no further corrective actions will be taken.

> **Example R5e:** The cause of the Misoperation was due to a non-registered entity communications provider problem.

Example R5f: The cause of the Misoperation was due to a transmission transformer tapped industrial customer who initiated a direct transfer trip to a registered entity's transmission breaker.

In situations where a Misoperation cause emanates from a non-registered outside entity, there may be limited influence an entity can exert on an outside entity and is considered outside of an entity's control.

The following are examples of declarations made why corrective actions would not improve BES reliability.

Example R5g: The investigation showed that the Misoperation occurred due to transients associated with energizing transformer ABC at Station Y. Studies show that de-sensitizing the relay to the recorded transients may cause the relay to fail to operate as intended during power system oscillations.

Example R5h: As a result of an operation that left a portion of the power system in an electrical island condition, circuit XYZ within that island tripped, resulting in loss of load within the island. Subsequent investigation showed an overfrequency condition persisted after the formation of that island and the XYZ line protective relay operated. Since this relay was operating outside of its designed frequency range and would not be subject to this condition when line XYZ is operated normally connected to the BES, no corrective action will be taken because BES reliability would not be improved.

Example R5i: During a major ice storm, four of six circuits were lost at Station A. Subsequent to the loss of these circuits, a skywire (i.e., shield wire) broke near station A on line AB (between Station A and B) resulting in a phase-phase Fault. The protection scheme utilized for both protection groups is a permissive overreaching transfer trip (POTT). The Line AB protection at Station B tripped timed for this event (i.e., Slow Trip – During Fault) even though this line had been identified as requiring high speed clearing. A weak infeed condition was created at Station A due to the loss of 4 transmission circuits resulting in the absence of a permissive signal on Line AB from Station A during this Fault. No corrective action will be taken for this Misoperation as even under N-1 conditions, there is normally enough infeed at Station A to send a proper permissive signal to station B. Any changes to the protection scheme to account for this would not improve BES reliability.

A declaration why corrective actions are beyond the entity's control or would not improve BES reliability should include the Misoperation cause and the justification for taking no corrective action. Furthermore, a declaration that no further corrective actions will be taken is expected to be used sparingly.

Requirement R6

To achieve the stated purpose of this standard, which is to identify and correct the causes of Misoperations of Protection Systems for BES Elements, the responsible entity is required to implement a CAP that addresses the specific problem (i.e., cause(s) of the Misoperation)

through completion. Protection System owners are required in the implementation of a CAP to update it when actions or timetable change, until completed. Accomplishing this objective is intended to reduce the occurrence of future Misoperations of a similar nature, thereby improving reliability and minimizing risk to the BES.

The following is an example of a completed CAP for a relay Misoperation that was applying a standing trip (See also, Example R5a).

> **Example R6a:** Actions: The impedance relay was removed from service on 06/02/2014 because it was applying a standing trip. A failed capacitor was found within the impedance relay and replaced. The impedance relay functioned properly during testing after the capacitor was replaced. The impedance relay was returned to service on 06/05/2014.
>
> CAP completed on 06/25/2014.

The following is an example of a completed CAP for a relay Misoperation that was applying a standing trip that resulted in the correction and the establishment of a program for further replacements (See also, Example R5b).

> **Example R6b:** Actions: The impedance relay was removed from service on 06/02/2014 because it was applying a standing trip. A failed capacitor was found within the impedance relay and replaced. The impedance relay functioned properly during testing after the capacitor was replaced. The impedance relay was returned to service on 06/05/2014.
>
> A program for wholesale preemptive replacement of capacitors in this type of impedance relay was established on 10/28/2014.
>
> CAP completed on 10/28/2014.

The following is an example of a completed CAP of corrective actions with a timetable that required updating for a failed relay and preemptive actions for similar installations (See also, Example R5c).

> **Example R6c:** Actions: The impedance relay was removed from service on 06/02/2014 because it was applying a standing trip. A failed capacitor was found within the impedance relay and replaced. The impedance relay functioned properly during testing after the capacitor was replaced. The impedance relay was returned to service on 06/05/2014.
>
> The impedance relay capacitor replacement was completed at stations A, B, and C on 08/16/2014. The impedance relay capacitor replacement was completed at stations D, E, and F on 10/24/2014. The impedance relay capacitor replacement for stations G, H, and I were postponed due to resource rescheduling from a scheduled 02/01/15 completion to 04/01/2015 completion. Capacitor replacement was completed on 03/09/2015 at stations G, H, and I. All stations identified in the evaluation have been completed.
>
> CAP completed on 03/09/2015.

The following is an example of a completed CAP for corrective actions with updated actions for a firmware problem and preemptive actions for similar installations. (See also, Example R5d).

> **Example R6d:** Actions: fault records were provided to the manufacturer on 06/04/2014. The manufacturer responded that the Misoperation was caused by a bug in version 2 firmware, and recommended installing version 3 firmware. Version 3 firmware was installed on 08/12/2014.
>
> Nine of the twelve relays were updated to version 3 firmware on 09/23/2014. The manufacturer provided a subsequent update which was determined to be beneficial for the remaining relays. The remaining three of twelve relays identified as having the version 2 firmware were updated to version 3.01 firmware on 11/10/2014.
>
> CAP completed on 11/10/2014.

The CAP is complete when all of the actions identified within the CAP have been completed.

Process Flow Chart: Below is a graphical representation demonstrating the relationships between Requirements:

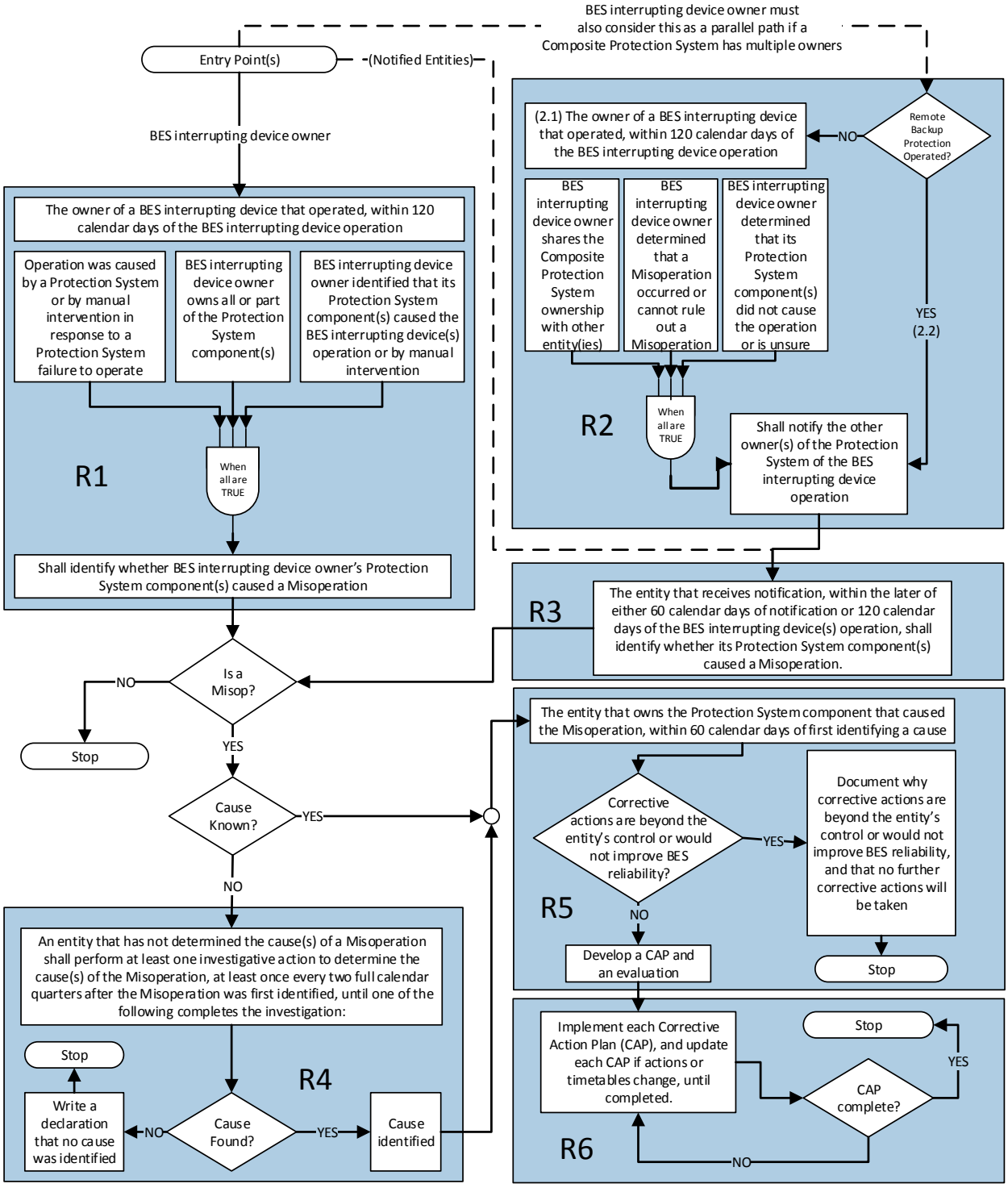
BES interrupting device owner must also consider this as a parallel path if a Composite Protection System has multiple owners
Entry Point(s)
(Notified Entities)
BES interrupting device owner
The owner of a BES interrupting device that operated, within 120 calendar days of the BES interrupting device operation
Operation was caused by a Protection System or by manual intervention in response to a Protection System failure to operate
BES interrupting device owner owns all or part of the Protection System component(s)
BES interrupting device owner identified that its Protection System component(s) caused the BES interrupting device(s) operation or by manual intervention
R1
When all are TRUE
Shall identify whether BES interrupting device owner's Protection System component(s) caused a Misoperation
Is a Misop?
NO
Stop
YES
Cause Known?
YES
NO
An entity that has not determined the cause(s) of a Misoperation shall perform at least one investigative action to determine the cause(s) of the Misoperation, at least once every two full calendar quarters after the Misoperation was first identified, until one of the following completes the investigation:
Stop
R4
Write a declaration that no cause was identified
NO
Cause Found?
YES
Cause identified
(2.1) The owner of a BES interrupting device that operated, within 120 calendar days of the BES interrupting device operation
NO
Remote Backup Protection Operated?
YES (2.2)
BES interrupting device owner shares the Composite Protection System ownership with other entity(ies)
BES interrupting device owner determined that a Misoperation occurred or cannot rule out a Misoperation
BES interrupting device owner determined that its Protection System component(s) did not cause the operation or is unsure
R2
When all are TRUE
Shall notify the other owner(s) of the Protection System of the BES interrupting device operation
R3
The entity that receives notification, within the later of either 60 calendar days of notification or 120 calendar days of the BES interrupting device(s) operation, shall identify whether its Protection System component(s) caused a Misoperation.
The entity that owns the Protection System component that caused the Misoperation, within 60 calendar days of first identifying a cause
Corrective actions are beyond the entity's control or would not improve BES reliability?
YES
Document why corrective actions are beyond the entity's control or would not improve BES reliability, and that no further corrective actions will be taken
Stop
R5
NO
Develop a CAP and an evaluation
Implement each Corrective Action Plan (CAP), and update each CAP if actions or timetables change, until completed.
Stop
CAP complete?
YES
NO
R6

Rationale

During development of this standard, text boxes were embedded within the standard to explain the rationale for various parts of the standard. Upon BOT approval, the text from the rationale text boxes was moved to this section.

Rationale for Introduction

The only revisions made to version of PRC-004-4 are revisions to section 4.2 Facilities to clarify applicability of the Requirements of the standard at generator Facilities. These applicability revisions are intended to clarify and provide for consistent application of the Requirements to BES generator Facilities included in the BES through Inclusion I4 – Dispersed Power Producing Resources.

Rationale for Applicability

Misoperations occurring on the Protection Systems of individual generation resources identified under Inclusion I4 of the BES definition do not have a material impact on BES reliability when considered individually; however, the aggregate capability of these resources may impact BES reliability if a number of Protection Systems on the individual power producing resources incorrectly operated or failed to operate as designed during a system event. To recognize the potential for the Protection Systems of individual power producing resources to affect the reliability of the BES, 4.2.1.5 of the Facilities section reflects the threshold consistent with the revised BES definition. See FERC Order Approving Revised Definition, P 20, Docket No. RD14-2-000. The intent of 4.2.1.5 of the Facilities section is to exclude from the standard requirements these Protection Systems for “common- mode failure” type scenarios affecting less than or equal to 75 MVA aggregated nameplate generating capability at these dispersed generating facilities.

Standard Development Timeline

This section is maintained by the drafting team during the development of the standard and will be removed when the standard becomes effective.

Development Steps Completed

1. The NERC Board of Trustees ("Board") adopted PRC-004-4 and PRC-010-1 and retired PRC-022-1 on November ~~12~~13, 2014.
2. The NERC Standards Committee authorized the initial posting of the standard on February 18, 2015.
3. Draft 1 of PRC-004-5 was posted for a 45-day formal comment period from February 20 – April 7, 2015 and an initial ballot in the last ten days of the comment period from March 27 – April 7, 2015.

Description of Current Draft

The UVLSSDT is posting Draft ~~1~~2 of PRC-004-5 – Protection System Misoperation Identification and Correction for a ~~45~~10-day ~~initial formal comment period and concurrent/parallel initial~~final ballot ~~in the last ten days of the comment period. The draft contains revisions to the Applicability section to address UVLS equipment~~.

Anticipated Actions	Date
45-day formal comment period with ballot	February 2015
10-day final ballot	April 2015
Board adoption	May 2015

Project Development Background

The undervoltage load shedding (UVLS) standard drafting team (SDT) was tasked with addressing Misoperation of UVLS equipment during the development of version one of PRC-010 and version three of PRC-004 in Project 2010-05.1 (i.e., Misoperation). This project has been named phase 2 of Project 2008-02 (i.e., UVLS) for clarity purposes. Each SDT for these two projects outlined work necessary to address Misoperation of UVLS equipment. This work was deferred, at the time, because both PRC-010-1 and PRC-004-3 contained dependencies with other projects requiring their completion. This phase two is a continuation of the work performed under the Standards Authorization Request (SAR) for Project 2008-02.

The revisions proposed in Reliability Standard PRC-010-2 meet the following objectives:

- Address the UVLS Misoperation the remaining work due to the retirement of PRC-022-1 (*Undervoltage Load Shedding Program Performance*) during the development of PRC-010-1 (*Undervoltage Load Shedding*)
- Ensure the performance of the UVLS equipment (i.e., operation or non-operation) within the UVLS Program is assessed and, if necessary, mitigated

Basis for Revision

Originally, Misoperation of UVLS equipment was planned to be appended to a future version of PRC-004 (*Protection System Misoperation Identification and Correction*). The SDT is proposing a two-prong approach by revising both PRC-004 and PRC-010 to address the concern of identifying Misoperations of UVLS equipment in PRC-022-1.

First, the SDT proposes an addition to the Applicability section of PRC-004 to include UVLS that is intended to trip one or more Bulk Electric System (BES) Elements. This is consistent with previous communication to industry about addressing Misoperation of UVLS equipment.[1] Entities will be required to address UVLS that trips a BES Element similarly to other Protection Systems in PRC-004. While the revision to PRC-004 consistent with the communicated approach, the SDT determined that the proposed revision fails to address the performance (operation or non-operations) of UVLS Program equipment not covered by the strict processes of PRC-004.

Second, the SDT is proposing clarifying revisions in PRC-010-2, Requirements R4 and R5 to address UVLS Program equipment performance. These revisions are not requiring UVLS entities to address UVLS protective relays not covered by the strict processes of PRC-004; however, PRC-010-2 is requiring UVLS entities to address the deficiencies (e.g., Misoperations) identified in the assessment performed by Planning Coordinator or Transmission Planner in Requirement R4. Deficiencies include the performance (operation or non-operation) issues of UVLS Program equipment. These deficiencies, if any, are addressed by the UVLS entities through a Corrective Action Plan (CAP) developed in Requirement R5 and executed by the UVLS entities in Requirement R2 of PRC-010.

The term "Misoperation" as defined by the *Glossary of Terms Used in NERC Reliability Standards* is not used within the Requirements of PRC-010; however, the term is used in the Guidelines and Technical Basis section of the standard to provide clarity that UVLS Program equipment deficiencies include Misoperations that are to be corrected by UVLS entities. The PRC-010-2 Reliability Standard mandates that UVLS entities are to correct the deficiencies identified by the Planning Coordinator or Transmission Planner, such as Misoperation of UVLS equipment. Deficiencies are identified through either the periodic assessment or an assessment performed

[1] Refer to Implementation Plan for PRC-010-1 (http://www.nerc.com/pa/stand/Pages/PRC0101RI.aspx~~(http://www.nerc.com/pa/stand/Pages/PRC0101RI.aspx))~~ and PRC-010-1 (http://www.nerc.com/pa/Stand/Pages/ReliabilityStandards.aspx~~(http://www.nerc.com/pa/Stand/Pages/ReliabilityStandards.aspx),~~), Introduction in the Guidelines and Technical Basis, last paragraph.

following an event and included in a CAP to the UVLS entity. The structure used by the SDT allows the Planning Coordinator and Transmission Planner to assess UVLS equipment for Misoperation under PRC-010 rather than the Generator Owner, Transmission Owner, and Distribution Provider applicable to the strict processes of PRC-004.

The two-pronged approach ensures that any UVLS Program equipment containing a deficiency is identified and corrected under PRC-010 and UVLS that trips a BES Element ~~under~~ is corrected under PRC-004 to address the requirements in the retired PRC-022-1.

A. Introduction

1. **Title: Protection System Misoperation Identification and Correction**

2. **Number:** PRC-004-5

3. **Purpose:** Identify and correct the causes of Misoperations of Protection Systems for Bulk Electric System (BES) Elements.

4. **Applicability:**

   4.1. Functional Entities:

   4.1.1 Transmission Owner

   4.1.2 Generator Owner

   4.1.3 Distribution Provider

   4.2. Facilities:

   4.2.1 Protection Systems for BES Elements, with the following exclusions:

   4.2.1.1 Non-protective functions that are embedded within a Protection System.

   4.2.1.2 Protective functions intended to operate as a control function during switching.[2]

   4.2.1.3 Special Protection Systems (SPS).

   4.2.1.4 Remedial Action Schemes (RAS).

   4.2.1.5 Protection Systems of individual dispersed power producing resources identified under Inclusion I4 of the BES definition where the Misoperations affected an aggregate nameplate rating of less than or equal to 75 MVA of BES Facilities.

   4.2.2 Underfrequency load shedding (UFLS) that is intended to trip one or more BES Elements.

   4.2.3 Undervoltage load shedding (UVLS) that is intended to trip one or more BES Elements.

5. **Effective Date:** See Project 2008-02.2 Implementation Plan.

[2] For additional information and examples, see the "Non-Protective Functions" and "Control Functions" sections in the Application Guidelines.

B. Requirements and Measures

R1. Each Transmission Owner, Generator Owner, and Distribution Provider that owns a BES interrupting device that operated under the circumstances in Parts 1.1 through 1.3 shall, within 120 calendar days of the BES interrupting device operation, identify whether its Protection System component(s) caused a Misoperation: *[Violation Risk Factor: Medium][Time Horizon: Operations Assessment, Operations Planning]*

1.1 The BES interrupting device operation was caused by a Protection System or by manual intervention in response to a Protection System failure to operate; and

1.2 The BES interrupting device owner owns all or part of the Composite Protection System; and

1.3 The BES interrupting device owner identified that its Protection System component(s) caused the BES interrupting device(s) operation or was caused by manual intervention in response to its Protection System failure to operate.

M1. Each Transmission Owner, Generator Owner, and Distribution Provider shall have dated evidence that demonstrates it identified the Misoperation of its Protection System component(s), if any, that meet the circumstances in Requirement R1, Parts 1.1, 1.2, and 1.3 within the allotted time period. Acceptable evidence for Requirement R1, including Parts 1.1, 1.2, and 1.3 may include, but is not limited to the following dated documentation (electronic or hardcopy format): reports, databases, spreadsheets, emails, facsimiles, lists, logs, records, declarations, analyses of sequence of events, relay targets, Disturbance Monitoring Equipment (DME) records, test results, or transmittals.

R2. Each Transmission Owner, Generator Owner, and Distribution Provider that owns a BES interrupting device that operated shall, within 120 calendar days of the BES interrupting device operation, provide notification as described in Parts 2.1 and 2.2. *[Violation Risk Factor: Medium][Time Horizon: Operations Assessment, Operations Planning]*

2.1 For a BES interrupting device operation by a Composite Protection System or by manual intervention in response to a Protection System failure to operate, notification of the operation shall be provided to the other owner(s) that share Misoperation identification responsibility for the Composite Protection System under the following circumstances:

2.1.1 The BES interrupting device owner shares the Composite Protection System ownership with any other owner; and

2.1.2 The BES interrupting device owner has determined that a Misoperation occurred or cannot rule out a Misoperation; and

2.1.3 The BES interrupting device owner has determined that its Protection System component(s) did not cause the BES interrupting device(s) operation or cannot determine whether its Protection System components caused the BES interrupting device(s) operation.

2.2 For a BES interrupting device operation by a Protection System component intended to operate as backup protection for a condition on another entity's BES Element, notification of the operation shall be provided to the other Protection System owner(s) for which that backup protection was provided.

M2. Each Transmission Owner, Generator Owner, and Distribution Provider shall have dated evidence that demonstrates notification to the other owner(s), within the allotted time period for either Requirement R2, Part 2.1, including subparts 2.1.1, 2.1.2, and 2.1.3 and Requirement R2, Part 2.2. Acceptable evidence for Requirement R2, including Parts 2.1 and 2.2 may include, but is not limited to the following dated documentation (electronic or hardcopy format): emails, facsimiles, or transmittals.

R3. Each Transmission Owner, Generator Owner, and Distribution Provider that receives notification, pursuant to Requirement R2 shall, within the later of 60 calendar days of notification or 120 calendar days of the BES interrupting device(s) operation, identify whether its Protection System component(s) caused a Misoperation. *[Violation Risk Factor: Medium][Time Horizon: Operations Assessment, Operations Planning]*

M3. Each Transmission Owner, Generator Owner, and Distribution Provider shall have dated evidence that demonstrates it identified whether its Protection System component(s) caused a Misoperation within the allotted time period. Acceptable evidence for Requirement R3 may include, but is not limited to the following dated documentation (electronic or hardcopy format): reports, databases, spreadsheets, emails, facsimiles, lists, logs, records, declarations, analyses of sequence of events, relay targets, DME records, test results, or transmittals.

R4. Each Transmission Owner, Generator Owner, and Distribution Provider that has not determined the cause(s) of a Misoperation, for a Misoperation identified in accordance with Requirement R1 or R3, shall perform investigative action(s) to determine the cause(s) of the Misoperation at least once every two full calendar quarters after the Misoperation was first identified, until one of the following completes the investigation: *[Violation Risk Factor: Medium] [Time Horizon: Operations Assessment, Operations Planning]*

- The identification of the cause(s) of the Misoperation; or
- A declaration that no cause was identified.

M4. Each Transmission Owner, Generator Owner, and Distribution Provider shall have dated evidence that demonstrates it performed at least one investigative action according to Requirement R4 every two full calendar quarters until a cause is identified or a declaration is made. Acceptable evidence for Requirement R4 may include, but is not limited to the following dated documentation (electronic or hardcopy format): reports, databases, spreadsheets, emails, facsimiles, lists, logs, records, declarations, analyses of sequence of events, relay targets, DME records, test results, or transmittals.

R5. Each Transmission Owner, Generator Owner, and Distribution Provider that owns the Protection System component(s) that caused the Misoperation shall, within 60 calendar days of first identifying a cause of the Misoperation: [*Violation Risk Factor: Medium*] [*Time Horizon: Operations Planning, Long-Term Planning*]

- Develop a Corrective Action Plan (CAP) for the identified Protection System component(s), and an evaluation of the CAP's applicability to the entity's other Protection Systems including other locations; or
- Explain in a declaration why corrective actions are beyond the entity's control or would not improve BES reliability, and that no further corrective actions will be taken.

M5. Each Transmission Owner, Generator Owner, and Distribution Provider shall have dated evidence that demonstrates it developed a CAP and an evaluation of the CAP's applicability to other Protection Systems and locations, or a declaration in accordance with Requirement R5. Acceptable evidence for Requirement R5 may include, but is not limited to the following dated documentation (electronic or hardcopy format): CAP and evaluation, or declaration.

R6. Each Transmission Owner, Generator Owner, and Distribution Provider shall implement each CAP developed in Requirement R5, and update each CAP if actions or timetables change, until completed. *[Violation Risk Factor: Medium][Time Horizon: Operations Planning, Long-Term Planning]*

M6. Each Transmission Owner, Generator Owner, and Distribution Provider shall have dated evidence that demonstrates it implemented each CAP, including updating actions or timetables. Acceptable evidence for Requirement R6 may include, but is not limited to the following dated documentation (electronic or hardcopy format): records that document the implementation of each CAP and the completion of actions for each CAP including revision history of each CAP. Evidence may also include work management program records, work orders, and maintenance records.

C. Compliance

1. Compliance Monitoring Process

1.1. Compliance Enforcement Authority

As defined in the NERC Rules of Procedure, "Compliance Enforcement Authority" (CEA) means NERC or the Regional Entity in their respective roles of monitoring and enforcing compliance with the NERC Reliability Standards.

1.2. Evidence Retention

The following evidence retention periods identify the period of time an entity is required to retain specific evidence to demonstrate compliance. For instances where the evidence retention period specified below is shorter than the time since the last audit, the CEA may ask an entity to provide other evidence to show that it was compliant for the full time period since the last audit.

The Transmission Owner, Generator Owner, and Distribution Provider shall keep data or evidence to show compliance as identified below unless directed by its CEA to retain specific evidence for a longer period of time as part of an investigation.

The Transmission Owner, Generator Owner, and Distribution Provider shall retain evidence of Requirements R1, R2, R3, and R4, Measures M1, M2, M3, and M4 for a minimum of 12 calendar months following the completion of each Requirement.

The Transmission Owner, Generator Owner, and Distribution Provider shall retain evidence of Requirement R5, Measure M5, including any supporting analysis per Requirements R1, R2, R3, and R4, for a minimum of 12 calendar months following completion of each CAP, completion of each evaluation, and completion of each declaration.

The Transmission Owner, Generator Owner, and Distribution Provider shall retain evidence of Requirement R6, Measure M6 for a minimum of 12 calendar months following completion of each CAP.

If a Transmission Owner, Generator Owner, or Distribution Provider is found non-compliant, it shall keep information related to the non-compliance until mitigation is complete and approved, or for the time specified above, whichever is longer.

The CEA shall keep the last audit records and all requested and submitted subsequent audit records.

1.3. Compliance Monitoring and Assessment Processes

Compliance Audit

Self-Certification

Spot Checking

Compliance Investigation

Self-Reporting

Complaint

1.4. Additional Compliance Information

None.

D. Table of Compliance Elements

R#	Time Horizon	VRF	Violation Severity Levels			
			Lower VSL	Moderate VSL	High VSL	Severe VSL
R1	Operations Assessment, Operations Planning	Medium	The responsible entity identified whether its Protection System component(s) caused a Misoperation in accordance with Requirement R1, but in more than 120 calendar days and less than or equal to 150 calendar days of the BES interrupting device operation.	The responsible entity identified whether its Protection System component(s) caused a Misoperation in accordance with Requirement R1, but in more than 150 calendar days and less than or equal to 165 calendar days of the BES interrupting device operation.	The responsible entity identified whether its Protection System component(s) caused a Misoperation in accordance with Requirement R1, but in more than 165 calendar days and less than or equal to 180 calendar days of the BES interrupting device operation.	The responsible entity identified whether its Protection System component(s) caused a Misoperation in accordance with Requirement R1, but in more than 180 calendar days of the BES interrupting device operation. OR The responsible entity failed to identify whether its Protection System component(s) caused a Misoperation in accordance with Requirement R1.

R#	Time Horizon	VRF	Violation Severity Levels			
			Lower VSL	Moderate VSL	High VSL	Severe VSL
R2	Operations Assessment, Operations Planning	Medium	The responsible entity notified the other owner(s) of the Protection System component(s) in accordance with Requirement R2, but in more than 120 calendar days and less than or equal to 150 calendar days of the BES interrupting device operation.	The responsible entity notified the other owner(s) of the Protection System component(s) in accordance with Requirement R2, but in more than 150 calendar days and less than or equal to 165 calendar days of the BES interrupting device operation.	The responsible entity notified the other owner(s) of the Protection System component(s) in accordance with Requirement R2, but in more than 165 calendar days and less than or equal to 180 calendar days of the BES interrupting device operation.	The responsible entity notified the other owner(s) of the Protection System component(s) in accordance with Requirement R2, but in more than 180 calendar days of the BES interrupting device operation. OR The responsible entity failed to notify one or more of the other owner(s) of the Protection System component(s) in accordance with Requirement R2.

R#	Time Horizon	VRF	Violation Severity Levels			
			Lower VSL	Moderate VSL	High VSL	Severe VSL
R3	Operations Assessment, Operations Planning	Medium	The responsible entity identified whether or not its Protection System component(s) caused a Misoperation in accordance with Requirement R3, but was less than or equal to 30 calendar days late.	The responsible entity identified whether or not its Protection System component(s) caused a Misoperation in accordance with Requirement R3, but was greater than 30 calendar days and less than or equal to 45 calendar days late.	The responsible entity identified whether or not its Protection System component(s) caused a Misoperation in accordance with Requirement R3, but was greater than 45 calendar days and less than or equal to 60 calendar days late.	The responsible entity identified whether or not its Protection System component(s) caused a Misoperation in accordance with Requirement R3, but was greater than 60 calendar days late. OR The responsible entity failed to identify whether or not a Misoperation of its Protection System component(s) occurred in accordance with Requirement R3.

R#	Time Horizon	VRF	Violation Severity Levels			
			Lower VSL	Moderate VSL	High VSL	Severe VSL
R4	Operations Assessment, Operations Planning	Medium	The responsible entity performed at least one investigative action in accordance with Requirement R4, but was less than or equal to one calendar quarter late.	The responsible entity performed at least one investigative action in accordance with Requirement R4, but was greater than one calendar quarter and less than or equal to two calendar quarters late.	The responsible entity performed at least one investigative action in accordance with Requirement R4, but was greater than two calendar quarters and less than or equal to three calendar quarters late.	The responsible entity performed at least one investigative action in accordance with Requirement R4, but was more than three calendar quarters late. OR The responsible entity failed to perform investigative action(s) in accordance with Requirement R4.

R#	Time Horizon	VRF	Violation Severity Levels			
			Lower VSL	Moderate VSL	High VSL	Severe VSL
R5	Operations Planning, Long-Term Planning	Medium	The responsible entity developed a CAP, or explained in a declaration in accordance with Requirement R5, but in more than 60 calendar days and less than or equal to 70 calendar days of first identifying a cause of the Misoperation. OR (See next page)	The responsible entity developed a CAP, or explained in a declaration in accordance with Requirement R5, but in more than 70 calendar days and less than or equal to 80 calendar days of first identifying a cause of the Misoperation. OR (See next page)	The responsible entity developed a CAP, or explained in a declaration in accordance with Requirement R5, but in more than 80 calendar days and less than or equal to 90 calendar days of first identifying a cause of the Misoperation. OR (See next page)	The responsible entity developed a CAP, or explained in a declaration in accordance with Requirement R5, but in more than 90 calendar days of first identifying a cause of the Misoperation. OR The responsible entity failed to develop a CAP or explain in a declaration in accordance with Requirement R5. OR (See next page)

R#	Time Horizon	VRF	Violation Severity Levels			
			Lower VSL	Moderate VSL	High VSL	Severe VSL
R5	(Continued)		The responsible entity developed an evaluation in accordance with Requirement R5, but in more than 60 calendar days and less than or equal to 70 calendar days of first identifying a cause of the Misoperation.	The responsible entity developed an evaluation in accordance with Requirement R5, but in more than 70 calendar days and less than or equal to 80 calendar days of first identifying a cause of the Misoperation.	The responsible entity developed an evaluation in accordance with Requirement R5, but in more than 80 calendar days and less than or equal to 90 calendar days of first identifying a cause of the Misoperation.	The responsible entity developed an evaluation in accordance with Requirement R5, but in more than 90 calendar days of first identifying a cause of the Misoperation. OR The responsible entity failed to develop an evaluation in accordance with Requirement R5.
R6	Operations Planning, Long-Term Planning	Medium	The responsible entity implemented, but failed to update a CAP, when actions or timetables changed, in accordance with Requirement R6.	N/A	N/A	The responsible entity failed to implement a CAP in accordance with Requirement R6.

E. Regional Variances

None.

F. Interpretations

None.

G. Associated Documents

NERC System Protection and Controls Subcommittee of the NERC Planning Committee, Assessment of Standards: PRC-003-1 – Regional Procedure for Analysis of Misoperations of Transmission and Generation Protection Systems, PRC-004-1 – Analysis and Mitigation of Transmission and Generation Protection Misoperations, PRC-016-1 – Special Protection System Misoperations, May 22, 2009.[3]

Version History

Version	Date	Action	Change Tracking
0	April 1, 2005	Effective Date	New
1	December 1, 2005	1. Changed incorrect use of certain hyphens (-) to "en dash" (–) and "em dash (—)." 2. Added "periods" to items where appropriate. 3. Changed "Timeframe" to "Time Frame" in item D, 1.2.	01/20/06
1a	February 17, 2011	Adopted by NERC Board of Trustees	Project 2009-17 interpretation adding Appendix 1 - Interpretation regarding applicability of standard to protection of radially connected transformers
1a	September 26, 2011	Appended FERC-approved interpretation of R1 and R3 to version 1	FERC's Order approving the interpretation of R1 and R3 is effective as of September 26, 2011

[3] (http://www.nerc.com/comm/PC/System%20Protection%20and%20Control%20Subcommittee%20SPCS%20DL/PRC-003-004-016%20Report.pdf).

Version	Date	Action	Change Tracking
2	August 5, 2010	Adopted by NERC Board of Trustees	Project 2010-12 modifications to address Order No. 693 Directives contained in paragraph 1469
2a	September 26, 2011	Appended FERC-approved interpretation of R1 and R3 to version 2	FERC's Order approving the interpretation of R1 and R3 is effective as of September 26, 2011
2.1a	February 9, 2012	Adopted by NERC Board of Trustees	Errata change under Project 2010-07 to add "…and generator interconnection Facility…"
3	August 14, 2014	Adopted by NERC Board of Trustees	Revision under Project 2010-05.1
4	November 13, 2014	Adopted by NERC Board of Trustees	Applicability revision under Project 2014-01 to clarify application of Requirements to BES dispersed power producing resources
5		Adopted by NERC Board of Trustees	Revision under Project 2008-02.2

Guidelines and Technical Basis

Introduction

This standard addresses the reliability issues identified in the letter[4] from Gerry Cauley, NERC President and CEO, dated January 7, 2011.

> "Nearly all major system failures, excluding perhaps those caused by severe weather, have misoperations of relays or automatic controls as a factor contributing to the propagation of the failure. …Relays can misoperate, either operate when not needed or fail to operate when needed, for a number of reasons. First, the device could experience an internal failure – but this is rare. Most commonly, relays fail to operate correctly due to incorrect settings, improper coordination (of timing and set points) with other devices, ineffective maintenance and testing, or failure of communications channels or power supplies. Preventable errors can be introduced by field personnel and their supervisors or more programmatically by the organization."

The standard also addresses the findings in the *2011 Risk Assessment of Reliability Performance*[5]; July 2011.

> "…a number of multiple outage events were initiated by protection system Misoperations. These events, which go beyond their design expectations and operating procedures, represent a tangible threat to reliability. A deeper review of the root causes of dependent and common mode events, which include three or more automatic outages, is a high priority for NERC and the industry."

The *State of Reliability 2014*[6] report continued to identify Protection System Misoperations as a significant contributor to automatic transmission outage severity. The report recommended completion of the development of PRC-004-3 as part of the solution to address Protection System Misoperations.

Definitions

The Misoperation definition is based on the IEEE/PSRC Working Group I3 "Transmission Protective Relay System Performance Measuring Methodology[7]." Misoperations of a Protection System include failure to operate, slowness in operating, or operating when not required either during a Fault or non-Fault condition.

---

[4] (http://www.nerc.com/pa/Stand/Project%20201005%20Protection%20System%20Misoperations%20DL/20110209130708-Cauley%20letter.pdf).

[5] "2011 Risk Assessment of Reliability Performance." NERC. (http://www.nerc.com/files/2011_RARPR_FINAL.pdf. July 2011-). Pg. 3.

[6] "State of Reliability 2014." NERC. (http://www.nerc.com/pa/Stand/Pages/RelaibilityCoordinationProject20066.aspx-). May 2014. Pg. 18 of 106.

[7] "Transmission Protective Relay System Performance Measuring Methodology." Working Group I3 of Power System Relaying Committee of IEEE Power Engineering Society. 1999.

For reference, a "Protection System" is defined in the *Glossary of Terms Used in NERC Reliability Standards* ("NERC Glossary") as:

- Protective relays which respond to electrical quantities,
- Communications systems necessary for correct operation of protective functions,
- Voltage and current sensing devices providing inputs to protective relays,
- Station dc supply associated with protective functions (including station batteries, battery chargers, and non-battery-based dc supply), and
- Control circuitry associated with protective functions through the trip coil(s) of the circuit breakers or other interrupting devices.

A BES interrupting device is a BES Element, typically a circuit breaker or circuit switcher that has the capability to interrupt fault current. Although BES interrupting device mechanisms are not part of a Protection System, the standard uses the operation of a BES interrupting device by a Protection System to initiate the review for Misoperation.

The following two definitions are being proposed for inclusion in the NERC Glossary:

> **Composite Protection System –** *The total complement of Protection System(s) that function collectively to protect an Element. Backup protection provided by a different Element's Protection System(s) is excluded.*

The Composite Protection System definition is based on the principle that an Element's multiple layers of protection are intended to function collectively. This definition has been introduced in this standard and incorporated into the proposed definition of Misoperation to clarify that the overall performance of an Element's total complement of protection should be considered while evaluating an operation.

Composite Protection System – Line Example

The Composite Protection System of the Alpha-Beta line (Circuit #123) is comprised of current differential, permissive overreaching transfer trip (POTT), step distance (classic zone 1, zone 2, and zone 3), instantaneous-overcurrent, time-overcurrent, out-of-step, and overvoltage protection. The protection is housed at the Alpha and Beta substations, and includes the associated relays, communications systems, voltage and current sensing devices, DC supplies, and control circuitry.

Composite Protection System – Transformer Example

The Composite Protection System of the Alpha transformer (#2) is comprised of internal differential, overall differential, instantaneous-overcurrent, and time-overcurrent protection. The protection is housed at the Alpha substation, and includes the associated relays, voltage and current sensing devices, DC supplies, and control circuitry.

Composite Protection System – Generator Example

The Composite Protection System of the Beta generator (#3) is comprised of generator differential, overall differential, overcurrent, stator ground, reverse power, volts per hertz, loss-of-field, and undervoltage protection. The protection is housed at the Beta generating plant and at the Beta substation, and includes the associated relays, voltage and current sensing devices, DC supplies, and control circuitry.

Composite Protection System – Breaker Failure Example

Breaker failure protection provides backup protection for the breaker, and therefore is part of the breaker's Composite Protection System. Considering breaker failure protection to be part of another Element's Composite Protection System could lead to an incorrect conclusion that a breaker failure operation automatically satisfies the "Slow Trip" criteria of the Misoperation definition.

- An example of a correct operation of the breaker's Composite Protection System is when the breaker failure relaying tripped because the line relaying operated, but the breaker failed to clear the Fault. The breaker failure relaying operated because of a failed trip coil. The failed trip coil caused a Misoperation of the line's Composite Protection System.
- An example of a correct operation of the breaker's Composite Protection System is when the breaker failure relaying tripped because the line relaying operated, but the breaker failed to clear the Fault. Only the breaker failure relaying operated because of a failed breaker mechanism. This was not a Misoperation because the breaker mechanism is not part of the breaker's Composite Protection System.
- An example of an "Unnecessary Trip – During Fault" is when the breaker failure relaying tripped at the same time as the line relaying during a Fault. The Misoperation was due to the breaker failure timer being set to zero.

Misoperation – *The failure a Composite Protection System to operate as intended for protection purposes. Any of the following is a Misoperation:*

1. **Failure to Trip – During Fault** – *A failure of a Composite Protection System to operate for a Fault condition for which it is designed. The failure of a Protection System component is not a Misoperation as long as the performance of the Composite Protection System is correct.*
2. ***Failure to Trip – Other Than Fault*** *– A failure of a Composite Protection System to operate for a non-Fault condition for which it is designed, such as a power swing, undervoltage, overexcitation, or loss of excitation. The failure of a Protection System component is not a Misoperation as long as the performance of the Composite Protection System is correct.*

3. ***Slow Trip – During Fault*** *– A Composite Protection System operation that is slower than required for a Fault condition if the duration of its operating time resulted in the operation of at least one other Element's Composite Protection System.*
4. ***Slow Trip – Other Than Fault*** *– A Composite Protection System operation that is slower than required for a non-Fault condition, such as a power swing, undervoltage, overexcitation, or loss of excitation, if the duration of its operating time resulted in the operation of at least one other Element's Composite Protection System.*
5. ***Unnecessary Trip – During Fault*** *– An unnecessary Composite Protection System operation for a Fault condition on another Element.*
6. ***Unnecessary Trip – Other Than Fault*** *– An unnecessary Composite Protection System operation for a non-Fault condition. A Composite Protection System operation that is caused by personnel during on-site maintenance, testing, inspection, construction, or commissioning activities is not a Misoperation.*

The Misoperation definition is based on the principle that an Element's total complement of protection is intended to operate dependably and securely.

- Failure to automatically reclose after a Fault condition is not included as a Misoperation because reclosing equipment is not included within the definition of Protection System.
- A breaker failure operation does not, in itself, constitute a Misoperation.
- A remote backup operation resulting from a "Failure to Trip" or a "Slow Trip" does not, in itself, constitute a Misoperation.

This proposed definition of Misoperation provides additional clarity over the current version. A Misoperation is the failure of a Composite Protection System to operate as intended for protection purposes. The definition includes six categories which provide further differentiation of what constitutes a Misoperation. These categories are discussed in greater detail in the following sections.

Failure to Trip – During Fault

This category of Misoperation typically results in the Fault condition being cleared by remote backup Protection System operation.

> **Example 1a:** A failure of a transformer's Composite Protection System to operate for a transformer Fault is a Misoperation.
>
> **Example 1b:** A failure of a "primary" transformer relay (or any other component) to operate for a transformer Fault is not a "Failure to Trip – During Fault" Misoperation as long as another component of the transformer's Composite Protection System operated.
>
> **Example 1c:** A lack of target information does not by itself constitute a Misoperation. When a high-speed pilot system does not target because a high-speed zone element trips first, it would not in and of itself be a Misoperation.

Example 1d: A failure of an overall differential relay to operate is not a "Failure to Trip – During Fault" Misoperation as long as another component such as a generator differential relay operated.

Example 1e: The Composite Protection System for a bus does not operate during a bus Fault which results in the operation of all local transformer Protection Systems connected to that bus and all remote line Protection Systems connected to that bus isolating the faulted bus from the grid. The operation of the local transformer Protection Systems and the operation of all remote line Protection Systems correctly provided backup protection. There is one "Failure to Trip – During Fault" Misoperation of the bus Composite Protection System.

In analyzing the Protection System for Misoperation, the entity must also consider whether the "Slow Trip – During Fault" category applies to the operation.

Failure to Trip – Other Than Fault

This category of Misoperation may have resulted in operator intervention. The "Failure to Trip – Other Than Fault" conditions cited in the definition are examples only, and do not constitute an all-inclusive list.

Example 2a: A failure of a generator's Composite Protection System to operate for an unintentional loss of field condition is a Misoperation.

Example 2b: A failure of an overexcitation relay (or any other component) is not a "Failure to Trip – Other Than Fault" Misoperation as long as the generator's Composite Protection System operated as intended isolating the generator from the BES.

In analyzing the Protection System for Misoperation, the entity must also consider whether the "Slow Trip – Other Than Fault" category applies to the operation.

Slow Trip – During Fault

This category of Misoperation typically results in remote backup Protection System operation before the Fault is cleared.

Example 3a: A Composite Protection System that is slower than required for a Fault condition is a Misoperation if the duration of its operating time resulted in the operation of at least one other Element's Composite Protection System. The current differential element of a multiple function relay failed to operate for a line Fault. The same relay's time-overcurrent element operated after a time delay. However, an adjacent line also operated from a time-overcurrent element. The faulted line's time-overcurrent element was found to be set to trip too slowly.

Example 3b: A failure of a breaker's Composite Protection System to operate as quickly as intended to meet the expected critical Fault clearing time for a line Fault in conjunction with a breaker failure (i.e., stuck breaker) is a Misoperation if it resulted in an unintended operation of at least one other Element's Composite Protection System. If a generating unit's Composite Protection System operates due to instability caused by the slow trip of the breaker's Composite Protection System, it is not an "Unnecessary Trip – During Fault" Misoperation of the generating unit's Composite Protection System. This event would be a "Slow Trip – During Fault" Misoperation of the breaker's Composite Protection System.

Example 3c: A line connected to a generation interconnection station is protected with two independent high-speed pilot systems. The Composite Protection System for this line also includes step distance and time-overcurrent schemes in addition to the two pilot systems. During a Fault on this line, the two pilot systems fail to operate and the time-overcurrent scheme operates clearing the Fault with no generating units or other Elements tripping (i.e., no over-trips). This event is not a Misoperation.

The phrase "slower than required" means the duration of its operating time resulted in the operation of at least one other Element's Composite Protection System. It would be impractical to provide a precise tolerance in the definition that would be applicable to every type of Protection System. Rather, the owner(s) reviewing each Protection System operation should understand whether the speed and outcome of its Protection System operation met their objective. The intent is not to require documentation of exact Protection System operation times, but to assure consideration of relay coordination and system stability by the owner(s) reviewing each Protection System operation.

The phrase "resulted in the operation of any other Composite Protection System" refers to the need to ensure that relaying operates in the proper or planned sequence (i.e., the primary relaying for a faulted Element operates before the remote backup relaying for the faulted Element).

In analyzing the Protection System for Misoperation, the entity must also consider the "Unnecessary Trip – During Fault" category to determine if an "unnecessary trip" applies to the Protection System operation of an Element other than the faulted Element.

If a coordination error was at the local terminal (i.e., set too slow), then it was a "Slow Trip," category of Misoperation at the local terminal.

Slow Trip – Other Than Fault

The phrase "slower than required" means the duration of its operating time resulted in the operation of at least one other Element's Composite Protection System. It would be impractical to provide a precise tolerance in the definition that would be applicable to every type of Protection System. Rather, the owner(s) reviewing each Protection System operation should understand whether the speed and outcome of its Protection System operation met their objective. The intent is not to require documentation of exact Protection System operation

times, but to assure consideration of relay coordination and system stability by the owner(s) reviewing each Protection System operation.

> **Example 4:** A phase to phase fault occurred on the terminals of a generator. The generator's Composite Protection System and a transmission line's Composite Protection System both operated in response to the fault. It was found during subsequent investigation that the generator protection contained an inappropriate time delay. This caused the transmission line's correctly set overreaching zone of protection to operate. This was a Misoperation of the generator's Composite Protection System, but not of the transmission line's Composite Protection System.

The "Slow Trip – Other Than Fault" conditions cited in the definition are examples only, and do not constitute an all-inclusive list.

Unnecessary Trip – During Fault

An operation of a properly coordinated remote Protection System is not in and of itself a Misoperation if the Fault has persisted for a sufficient time to allow the correct operation of the Composite Protection System of the faulted Element to clear the Fault. A BES interrupting device failure, a "failure to trip" Misoperation, or a "slow trip" Misoperation may result in a proper remote Protection System operation.

> **Example 5:** An operation of a transformer's Composite Protection System which trips (i.e., over-trips) for a properly cleared line Fault is a Misoperation. The Fault is cleared properly by the faulted equipment's Composite Protection System (i.e., line relaying) without the need for an external Protection System operation resulting in an unnecessary trip of the transformer protection; therefore, the transformer Protection System operation is a Misoperation.
>
> **Example 5b:** An operation of a line's Composite Protection System which trips (i.e., over-trips) for a properly cleared Fault on a different line is a Misoperation. The Fault is cleared properly by the faulted line's Composite Protection System (i.e., line relaying); however, elsewhere in the system, a carrier blocking signal is not transmitted (e.g., carrier ON/OFF switch found in OFF position) resulting in the operation of a remote Protection System, single-end trip of a non-faulted line. The operation of the Protection System for the non-faulted line is an unnecessary trip during a Fault. Therefore, the non-faulted line Protection System operation is an "Unnecessary Trip – During Fault" Misoperation.
>
> **Example 5c:** If a coordination error was at the remote terminal (i.e., set too fast), then it was an "Unnecessary Trip – During Fault" category of Misoperation at the remote terminal.

Unnecessary Trip – Other Than Fault

Unnecessary trips for non-Fault conditions include but are not limited to: power swings, overexcitation, loss of excitation, frequency excursions, and normal operations.

> **Example 6a:** An operation of a line's Composite Protection System due to a relay failure during normal operation is a Misoperation.
>
> **Example 6b:** Tripping a generator by the operation of the loss of field protection during an off-nominal frequency condition while the field is intact is a Misoperation assuming the Composite Protection System was not intended to operate under this condition.
>
> **Example 6c:** An impedance line relay trip for a power swing that entered the relay's characteristic is a Misoperation if the power swing was stable and the relay operated because power swing blocking was enabled and should have prevented the trip, but did not.
>
> **Example 6d:** Tripping a generator operating at normal load by the operation of a reverse power protection relay due to a relay failure is a Misoperation.

Additionally, an operation that occurs during a non-Fault condition but was initiated directly by on-site (i.e., real-time) maintenance, testing, inspection, construction, or commissioning is not a Misoperation.

> **Example 6e:** A BES interrupting device operation that occurs at the remote end of a line during a non-Fault condition because a direct transfer trip was initiated by system maintenance and testing activities at the local end of the line is not a Misoperation because of the maintenance exclusion in category 6 of the definition of "Misoperation."

The "on-site" activities at one location that initiates a trip to another location are included in this exemption. This includes operation of a Protection System when energizing equipment to facilitate measurements, such as verification of current circuits as a part of performing commissioning; however, once the maintenance, testing, inspection, construction, or commissioning activity associated with the Protection System is complete, the "on-site" Misoperation exclusion no longer applies, regardless of the presence of on-site personnel.

Special Cases

Protection System operations for these cases would not be a Misoperation.

> **Example 7a:** A generator Protection System operation prior to closing the unit breaker(s) is not a Misoperation provided no in-service Elements are tripped.

This type of operation is not a Misoperation because the generating unit is not synchronized and is isolated from the BES. Protection System operations that occur when the protected Element is out of service and that do not trip any in-service Elements are not Misoperations.

In some cases where zones of protection overlap, the owner(s) of Elements may decide to allow a Protection System to operate faster in order to gain better overall Protection System performance for an Element.

Example 7b: The high-side of a transformer connected to a line may be within the zone of protection of the supplying line's relaying. In this case, the line relaying is planned to protect the area of the high-side of the transformer and into its primary winding. In order to provide faster protection for the line, the line relaying may be designed and set to operate without direct coordination (or coordination is waived) with local protection for Faults on the high-side of the connected transformer. Therefore, the operation of the line relaying for a high-side transformer Fault operated as intended and would not be a Misoperation.

Below are examples of conditions that would be a Misoperation.

Example7c: A 230 kV shunt capacitor bank was released for operational service. The capacitor bank trips due to a settings error in the capacitor bank differential relay upon energization.

Example 7d: A 230/115 kV BES transformer bank trips out when being re-energized due to an incorrect operation of the transformer differential relay for inrush after being released for operational service. Only the high-side breaker opens since the low-side breaker had not yet been closed.

Non-Protective Functions

BES interrupting device operations which are initiated by non-protective functions, such as those associated with generator controls, excitation controls, or turbine/boiler controls, static voltampere-reactive compensators (SVC), flexible ac transmission systems (FACTS), high-voltage dc (HVdc) transmission systems, circuit breaker mechanisms, or other facility control systems are not operations of a Protection System. The standard is not applicable to non-protective functions such as automation (e.g., data collection) or control functions that are embedded within a Protection System.

Control Functions

The entity must make a determination as to whether the standard is applicable to each operation of its Protection System in accordance with the provided exclusions in the standard's Applicability, see Section 4.2.1. The subject matter experts (SME) developing this standard recognize that entities use Protection Systems as part of a routine practice to control BES Elements. This standard is not applicable to operation of protective functions within a Protection System when intended for controlling a BES Element as a part of an entity's process or planned switching sequence. The following are examples of conditions to which this standard is not applicable:

Example 8a: The reverse power protective function that operates to remove a generating unit from service using the entity's normal or routine process.

Example 8b: The reverse power relay enables a permissive trip and the generator operator trips the unit.

The standard is not applicable to operation of the protective relay because its operation is intended as a control function as part of a controlled shutdown sequence for the generator. However, the standard remains applicable to operation of the reverse power relay when it operates for conditions not associated with the controlled shutdown sequence, such as a motoring condition caused by a trip of the prime mover.

The following is another example of a condition to which this standard is not applicable:

> **Example 8c:** Operation of a capacitor bank interrupting device for voltage control using functions embedded within a microprocessor based relay that is part of a Protection System.

The above are examples only, and do not constitute an all-inclusive list to which the standard is not applicable.

Extenuating Circumstances

In the event of a natural disaster or other extenuating circumstances, the December 20, 2012 Sanction Guidelines of the North American Electric Reliability Corporation, Section 2.8, Extenuating Circumstances, reads: "In unique extenuating circumstances causing or contributing to the violation, such as significant natural disasters, NERC or the Regional Entity may significantly reduce or eliminate Penalties." The Regional Entities to whom NERC has delegated authority will consider extenuating circumstances when considering any sanctions in relation to the timelines outlined in this standard.

The volume of Protection System operations tend to be sporadic. If a high rate of Protection System operations is not sustained, utilities will have an opportunity to catch up within the 120 day period.

Requirement Time Periods

The time periods within all the Requirements are distinct and separate. The applicable entity in Requirement R1 has 120 calendar days to identify whether a BES interrupting device operation is a Misoperation. Once the applicable entity has identified a Misoperation, it has completed its performance under Requirement R1. Identified Misoperations without an identified cause become subject to Requirement R4 and any subsequent Requirements as necessary. Identified Misoperations with an identified cause become subject to Requirement R5 and any subsequent Requirements as necessary.

In Requirement R2, the applicable entity has 120 calendar days, based on the date of the BES interrupting device operation, to provide notification to the other Protection System owners that meet the circumstances in Parts 2.1 and 2.2. For the case of an applicable entity that was notified (R3), it has the later of 120 calendar days from the date of the BES interrupting device operation or 60 calendar days of notification to identify whether its Protection System components caused a Misoperation.

Once a Misoperation is identified in either Requirement R1 or R3, and the applicable entity did not identify the cause(s) of the Misoperation, the time period for performing at least one investigative action every two full calendar quarters begins. The time period(s) in Requirement R4 resets upon each period. When the applicable entity's investigative actions identify the cause of the identified Misoperation or the applicable entity declares that no cause was found, the applicable entity has completed its performance in Requirement R4.

The time period in Requirement R5 begins when the Misoperation cause is first identified. The applicable entity is allotted 60 calendar days to perform one of the two activities listed in Requirement R5 (e.g., CAP or declaration) to complete its performance under Requirement R5.

Requirement R6 time period is determined by the actions and the associated timetable to complete those actions identified in the CAP. The time periods contained in the CAP may change from time to time and the applicable entity is required to update the timetable when it changes.

Time periods provided in the Requirements are intended to provide a reasonable amount of time to perform each Requirement. Performing activities in the least amount of time facilitates prompt identification of Misoperations, notification to other Protection System owners, identification of the cause(s), correction of the cause(s), and that important information is retained that may be lost due to time.

Requirement R1

This Requirement initiates a review of each BES interrupting device operation to identify whether or not a Misoperation may have occurred. Since the BES interrupting device owner typically monitors and tracks device operations, the owner is the logical starting point for identifying Misoperations of Protection Systems for BES Elements. A review is required when (1) a BES interrupting device operates that is caused by a Protection System or by manual intervention in response to a Protection System failure to operate, (2) regardless of whether the owner owns all or part of the Protection System component(s), and (3) the owner identified its Protection System component(s) as causing the BES interrupting device operation or was caused by manual intervention in response to its Protection System failure to operate.

Since most Misoperations result in the operation of one or more BES interrupting devices, these operations initiate a review to identify any Misoperation. If an Element is manually isolated in response to a failure to operate, the manual isolation of the Element triggers a review for Misoperation.

> **Example R1a:** The failure of a loss of field relay on a generating unit where an operator takes action to isolate the unit.

Manual intervention may indicate a Misoperation has occurred, thus requiring the initiation of an investigation by the BES interrupting device owner.

For the case where a BES interrupting device did not operate and remote clearing occurs due to the failure of a Composite Protection System to operate, the BES interrupting device owner would still review the operation under Requirement R1. However, if the BES interrupting device

owner determines that its Protection System component operated as backup protection for a condition on another entity's BES Element, the owner would provide notification of the operation to the other Protection System owner(s) under Requirement R2, Part 2.2.

Protection Systems are made of many components. These components may be owned by different entities. For example, a Generator Owner may own a current transformer that sends information to a Transmission Owner's differential relay. All of these components and many more are part of a Protection System. It is expected that all of the owners will communicate with each other, sharing information freely, so that Protection System operations can be analyzed, Misoperations identified, and corrective actions taken.

Each entity is expected to use judgment to identify those Protection System operations that meet the definition of Misoperation regardless of the level of ownership. A combination of available information from resources such as counters, relay targets, Supervisory Control and Data Acquisition (SCADA) systems, or DME would typically be used to determine whether or not a Misoperation occurred. The intent of the standard is to classify an operation as a Misoperation if the available information leads to that conclusion. In many cases, it will not be necessary to leverage all available data to determine whether or not a Misoperation occurred. The standard also allows an entity to classify an operation as a Misoperation if entity is not sure. The entity may decide to identify the operation as a Misoperation to satisfy Requirement R1 and continue its investigation for a cause of the Misoperation under Requirement R4. If the continued investigative actions are inconclusive, the entity may declare no cause found and end its investigation. The entity is allotted 120 calendar days from the date of its BES interrupting device operation to identify whether its Protection System component(s) caused a Misoperation.

The Protection System operation may be documented in a variety of ways such as in a report, database, spreadsheet, or list. The documentation may be organized in a variety of ways such as by BES interrupting device, protected Element, or Composite Protection System.

Repeated operations which occur during the same automatic reclosing sequence do not need a separate identification under Requirement R1. Repeated Misoperations which occur during the same 24-hour period do not need a separate identification under Requirement R1. This is consistent with the NERC *Misoperations Report*[8] which states:

> "In order to avoid skewing the data with these repeated events, the NERC SPCS should clarify, in the next annual update of the misoperation template, that all misoperations due to the same equipment and cause within a 24 hour period be recorded as one misoperation."

The following is an example of a condition that is not a Misoperation.

[8] "Misoperations Report." Reporting Multiple Occurrences. NERC Protection System Misoperations Task Force. (http://www.nerc.com/docs/pc/psmtf/PSMTF_Report.pdf.). April 1, 2013. pgPg. 37 of 40.

Example R1b: A high impedance Fault occurs within a transformer. The sudden pressure relaying detects and operates for the Fault, but the differential relaying did not operate due to the low Fault current levels. This is not a Misoperation because the Composite Protection System was not required to operate because the Fault was cleared by the sudden pressure relay.

Requirement R2

Requirement R2 ensures notification of those who have a role in identifying Misoperations, but were not accounted for within Requirement R1. In the case of multi-entity ownership, the entity that owns the BES interrupting device that operated is expected to use judgment to identify those Protection System operations that meet the definition of Misoperation under Requirement R1; however, if the entity that owns a BES interrupting device determines that its Protection System component(s) did not cause the BES interrupting device(s) operation or cannot determine whether its Protection System components caused the BES interrupting device(s) operation, it must notify the other Protection System owner(s) that share Misoperation identification responsibility when the criteria in Requirement R2 is met.

This Requirement does not preclude the Protection System owners from initially communicating and working together to determine whether a Misoperation occurred and, if so, the cause. The BES interrupting device owner is only required to officially notify the other owners when it: (1) shares the Composite Protection System ownership with other entity(ies), (2) determines that a Misoperation occurred or cannot rule out a Misoperation, and (3) determines its Protection System component(s) did not cause a Misoperation or is unsure. Officially notifying the other owners without performing a preliminary review may unnecessarily burden the other owners with compliance obligations under Requirement R3, redirect valuable resources, and add little benefit to reliability. The BES interrupting device owner should officially notify other owners when appropriate within the established time period.

The following is an example of a notification to another Protection System owner:

Example R2a: Circuit breakers A and B at the Charlie station tripped from directional comparison blocking (DCB) relaying on 03/03/2014 at 15:43 UTC during an external Fault. As discussed last week, the fault records indicate that a problem with your equipment (failure to transmit) caused the operation.

> **Example R2b:** A generator unit tripped out immediately upon synchronizing to the grid due to a Misoperation of its overcurrent protection. The Transmission Owner owns the 230 kV generator breaker that operated. The Transmission Owner, as the owner of the BES interrupting device after determining that its Protection System components did not cause the Misoperation, notified the Generator Owner of the operation. The Generator Owner investigated and determined that its Protection System components caused the Misoperation. In this example, the Generator Owner's Protection System components did cause the Misoperation. As the owner of the Protection System components that caused the Misoperation, the Generator Owner is responsible for creating and implementing the CAP.

A Composite Protection System owned by different functional entities within the same registered entity does not necessarily satisfy the notification criteria in Part 2.1.1 of Requirement R2. For example, if the same personnel within a registered entity perform the Misoperation identification for both the Generator Owner and Transmission Owner functions, then the Misoperation identification would be completely covered in Requirement R1, and therefore notification would not be required. However, if the Misoperation identification is handled by different groups, then notification would be required because the Misoperation identification would not necessarily be covered in Requirement R1.

> **Example R2c:** Line A Composite Protection System (owned by entity 1) failed to operate for an internal Fault. As a result, the zone 3 portion of Line B's Composite Protection System (owned by entity 2) and zone 3 portion of Line C's Composite Protection System (owned by entity 3) operated to clear the Fault. Entity 2 and 3 notified entity 1 of the remote zone 3 operation.

For the case where a BES interrupting device operates to provide backup protection for a non-BES Element, the entity reviewing the operation is not required to notify the other owners of Protection Systems for non-BES Elements. No notification is required because this Reliability Standard is not applicable to Protection Systems for non-BES Elements.

Requirement R3

For Requirement R3 (i.e., notification received), the entity that also owns a portion of the Composite Protection System is expected to use judgment to identify whether the Protection System operation is a Misoperation. A combination of available information from resources such as counters, relay targets, SCADA, DME, and information from the other owner(s) would typically be used to determine whether or not a Misoperation occurred. The intent of the standard is to classify an operation as a Misoperation if the available information leads to that conclusion. In many cases, it will not be necessary to leverage all available data to determine whether or not a Misoperation occurred. The standard also allows an entity to classify an operation as a Misoperation if an entity is not sure. The entity may decide to identify the operation as a Misoperation to satisfy Requirement R1 and continue its investigation for a cause of the Misoperation under Requirement R4. If the continued investigative actions are inconclusive, the entity may declare no cause found and end its investigation.

The entity that is notified by the BES interrupting device owner is allotted the later of 60 calendar days from receipt of notification or 120 calendar days from the BES interrupting device operation date to determine if its portion of the Composite Protection System caused the Protection System operation. It is expected that in most cases of a jointly owned Protection System, the entity making notification would have been in communication with the other owner(s) early in the process. This means that the shorter 60 calendar days only comes into play if the notification occurs in the second half of the 120 calendar days allotted to the BES interrupting device owner in Requirement R1.

The Protection System review may be organized in a variety of ways such as in a report, database, spreadsheet, or list. The documentation may be organized in a variety of ways such as by BES interrupting device, protected Element, or Composite Protection System. The BES interrupting device owner's notification received may be documented in a variety of ways such as an email or a facsimile.

Requirement R4

The entity in Requirement R4 (i.e., cause identification), whether it is the entity that owns the BES interrupting device or an entity that was notified, is expected to use due diligence in taking investigative action(s) to determine the cause(s) of an identified Misoperation for its portion of the Composite Protection System. The SMEs developing this standard recognize there will be cases where the cause(s) of a Misoperation will not be revealed during the allotted time periods in Requirements R1 or R3; therefore, Requirement R4 provides the entity a mechanism to continue its investigative work to determine the cause(s) of the Misoperation when the cause is not known.

A combination of available information from resources such as counters, relay targets, SCADA, DME, test results, and studies would typically be used to determine the cause of the Misoperation. At least one investigative action must be performed every two full calendar quarters until the investigation is completed.

The following is an example of investigative actions taken to determine the cause of an identified Misoperation:

> **Example R4a**: A Misoperation was identified on 03/18/2014. A line outage to test the Protection System was scheduled on 03/24/2014 for 12/15/2014 as the first investigative action (i.e., beyond the next two full calendar quarters) due to summer peak conditions. The protection engineer contacted the manufacturer on 04/10/2014 (i.e., within two full calendar quarters) to obtain any known issues. The engineer reviewed manufacturer's documents on 05/27/2014. The outage schedule was confirmed on 08/29/2014 and was taken on 12/15/2014. Testing was completed on 12/16/2014 (i.e., in the second two full quarters) revealing the microprocessor relay as the cause of the Misoperation. A CAP is being developed to replace the relay.

Periodic action minimizes compliance burdens and focuses the entity's effort on determining the cause(s) of the Misoperation while providing measurable evidence. The SMEs recognize

that certain planned investigative actions may require months or years to schedule and complete; therefore, the entity is only required to perform at least one investigative action every two full calendar quarters. If an investigative action is performed in the first quarter of a calendar year, the next investigative action would need to be performed by the end of the third calendar quarter. If an investigative action is performed in the last quarter of a calendar year, the next investigative action would need to be performed by the end of the second calendar quarter of the following calendar year. Investigative actions may include a variety of actions, such as reviewing DME records, performing or reviewing studies, completing relay calibration or testing, requesting manufacturer review, requesting an outage, or confirming a schedule.

The entity's investigation is complete when it identifies the cause of the Misoperation or makes a declaration that no cause was determined. The declaration is intended to be used if the entity determines that investigative actions have been exhausted or have not provided direction for identifying the Misoperation cause. Historically, approximately 12% of Misoperations are unknown or unexplainable.[9]

Although the entity only has to document its specific investigative actions taken to determine the cause(s) of an identified Misoperation, the entity should consider the benefits of formally organizing (e.g., in a report or database) its actions and findings. Well documented investigative actions and findings may be helpful in future investigations of a similar event or circumstances. A thorough report or database may contain a detailed description of the event, information gathered, investigative actions, findings, possible causes, identified causes, and conclusions. Multiple owners of a Composite Protection System might consider working together to produce a common report for their mutual benefit.

The following are examples of a declaration where no cause was determined:

> **Example R4b**: A Misoperation was identified on 04/11/2014. All relays at station A and B functioned properly during testing on 08/26/2014 as the first investigative action. The carrier system functioned properly during testing on 08/27/2014. The carrier coupling equipment functioned properly during testing on 08/28/2014. A settings review completed on 09/03/2014 indicated the relay settings were proper. Since the equipment involved in the operation functioned properly during testing, the settings were reviewed and found to be correct, and the equipment at station A and station B is already monitored. The investigation is being closed because no cause was found.
>
> **Example R4c:** A Misoperation was identified on 03/22/2014. The protection scheme was replaced before the cause was identified. The power line carrier or PLC based protection was replaced with fiber-optic based protection with an in-service date of 04/16/2014. The new system will be monitored for recurrence of the Misoperation.

[9] NERC System Protection and Control Subcommittee. Misoperations Report. April 1, 2013. (http://www.nerc.com/docs/pc/psmtf/PSMTF_Report.pdf~~:~~.). Figure 15: NERC Wide Misoperations by Cause Code. ~~pg~~Pg. 22 of 40.

Requirement R5

Resolving the causes of Protection System Misoperations benefits BES reliability by preventing recurrence. The Corrective Action Plan (CAP) is an established tool for resolving operational problems. The NERC Glossary defines a Corrective Action Plan as, *"A list of actions and an associated timetable for implementation to remedy a specific problem."* Since a CAP addresses specific problems, the determination of what went wrong needs to be completed before developing a CAP. When the Misoperation cause is identified in Requirement R1, R3 or R4, Requirement R5 requires Protection System owner(s) to develop a CAP, or explain why corrective actions are beyond the entity's control or would not improve BES reliability. The entity must develop the CAP or make a declaration why additional actions are beyond the entity's control or would not improve BES reliability and that no further corrective actions will be taken within 60 calendar days of first determining a cause.

The SMEs developing this standard recognize there may be multiple causes for a Misoperation. In these circumstances, the CAP would include a remedy for the identified causes. The CAP may be revised if additional causes are found; therefore, the entity has the option to create a single or multiple CAP(s) to correct multiple causes of a Misoperation. The 60 calendar day period for developing a CAP (or declaration) is established on the basis of industry experience which includes operational coordination timeframes, time to consider alternative solutions, coordination of resources, and development of a schedule.

The development of a CAP is intended to document the specific corrective actions needed to be taken to prevent Misoperation recurrence, the timetable for executing such actions, and an evaluation of the CAP's applicability to the entity's other Protection Systems including other locations. The evaluation of these other Protection Systems aims to reduce the risk and likelihood of similar Misoperations in other Protection Systems. The Protection System owner is responsible for determining the extent of its evaluation concerning other Protection Systems and locations. The evaluation may result in the owner including actions to address Protection Systems at other locations or the reasoning for not taking any action. The CAP and an evaluation of other Protection Systems including other locations must be developed to complete Requirement R5.

The following is an example of a CAP for a relay Misoperation that was applying a standing trip due to a failed capacitor within the relay and the evaluation of the cause at similar locations which determined capacitor replacement was not necessary.

For completion of each CAP in Examples R5a through R5d, please see Examples R6a through R6d.

> **Example R5a:** Actions: Remove the relay from service. Replace capacitor in the relay. Test the relay. Return to service or replace by 07/01/2014.
>
> Applicability to other Protection Systems: This type of impedance relay has not been experiencing problems and is systematically being replaced with microprocessor relays as Protection Systems are modernized. Therefore, it was assessed that a program for wholesale preemptive replacement of capacitors in this type of impedance relay does not need to be established for the system.

The following is an example of a CAP for a relay Misoperation that was applying a standing trip due to a failed capacitor within the relay and the evaluation of the cause at similar locations which determined the capacitors need preemptive correction action.

> **Example R5b:** Actions: Remove the relay from service. Replace capacitor in the relay. Test the relay. Return to service or replace by 07/01/2014.
>
> Applicability to other Protection Systems: This type of impedance relay is suspected to have previously tripped at other locations because of the same type of capacitor issue. Based on the evaluation, a program should be established by 12/01/2014 for wholesale preemptive replacement of capacitors in this type of impedance relay.

The following is an example of a CAP for a relay Misoperation that was applying a standing trip due to a failed capacitor within the relay and the evaluation of the cause at similar locations which determined the capacitors need preemptive correction action.

> **Example R5c:** Actions: Remove the relay from service. Replace capacitor in the relay. Test the relay. Return to service or replace by 07/01/2014.
>
> Applicability to other Protection Systems: This type of impedance relay is suspected to have previously tripped at other locations because of the same type of capacitor issue. Based on the evaluation, the preemptive replacement of capacitors in this type of impedance relay should be pursued for the identified stations A through I by 04/30/2015.
>
> A plan is being developed to replace the impedance relay capacitors at stations A, B, and C by 09/01/2014. A second plan is being developed to replace the impedance relay capacitors at stations D, E, and F by 11/01/2014. The last plan will replace the impedance relay capacitors at stations G, H, and I by 02/01/2015.

The following is an example of a CAP for a relay Misoperation that was due to a version 2 firmware problem and the evaluation of the cause at similar locations which determined the firmware needs preemptive correction action.

> **Example R5d:** Actions: Provide the manufacturer fault records. Install new firmware pending manufacturer results by 10/01/2014.
>
> Applicability to other Protection Systems: Based on the evaluation of other locations and a risk assessment, the newer firmware version 3 should be installed at all installations that are identified to be version 2. Twelve relays were identified across the system. Proposed completion date is 12/31/2014.

The following are examples of a declaration made where corrective actions are beyond the entity's control or would not improve BES reliability and that no further corrective actions will be taken.

> **Example R5e:** The cause of the Misoperation was due to a non-registered entity communications provider problem.

Example R5f: The cause of the Misoperation was due to a transmission transformer tapped industrial customer who initiated a direct transfer trip to a registered entity's transmission breaker.

In situations where a Misoperation cause emanates from a non-registered outside entity, there may be limited influence an entity can exert on an outside entity and is considered outside of an entity's control.

The following are examples of declarations made why corrective actions would not improve BES reliability.

Example R5g: The investigation showed that the Misoperation occurred due to transients associated with energizing transformer ABC at Station Y. Studies show that de-sensitizing the relay to the recorded transients may cause the relay to fail to operate as intended during power system oscillations.

Example R5h: As a result of an operation that left a portion of the power system in an electrical island condition, circuit XYZ within that island tripped, resulting in loss of load within the island. Subsequent investigation showed an overfrequency condition persisted after the formation of that island and the XYZ line protective relay operated. Since this relay was operating outside of its designed frequency range and would not be subject to this condition when line XYZ is operated normally connected to the BES, no corrective action will be taken because BES reliability would not be improved.

Example R5i: During a major ice storm, four of six circuits were lost at Station A. Subsequent to the loss of these circuits, a skywire (i.e., shield wire) broke near station A on line AB (between Station A and B) resulting in a phase-phase Fault. The protection scheme utilized for both protection groups is a permissive overreaching transfer trip (POTT). The Line AB protection at Station B tripped timed for this event (i.e., Slow Trip – During Fault) even though this line had been identified as requiring high speed clearing. A weak infeed condition was created at Station A due to the loss of 4 transmission circuits resulting in the absence of a permissive signal on Line AB from Station A during this Fault. No corrective action will be taken for this Misoperation as even under N-1 conditions, there is normally enough infeed at Station A to send a proper permissive signal to station B. Any changes to the protection scheme to account for this would not improve BES reliability.

A declaration why corrective actions are beyond the entity's control or would not improve BES reliability should include the Misoperation cause and the justification for taking no corrective action. Furthermore, a declaration that no further corrective actions will be taken is expected to be used sparingly.

Requirement R6

To achieve the stated purpose of this standard, which is to identify and correct the causes of Misoperations of Protection Systems for BES Elements, the responsible entity is required to implement a CAP that addresses the specific problem (i.e., cause(s) of the Misoperation)

through completion. Protection System owners are required in the implementation of a CAP to update it when actions or timetable change, until completed. Accomplishing this objective is intended to reduce the occurrence of future Misoperations of a similar nature, thereby improving reliability and minimizing risk to the BES.

The following is an example of a completed CAP for a relay Misoperation that was applying a standing trip (See also, Example R5a).

> **Example R6a:** Actions: The impedance relay was removed from service on 06/02/2014 because it was applying a standing trip. A failed capacitor was found within the impedance relay and replaced. The impedance relay functioned properly during testing after the capacitor was replaced. The impedance relay was returned to service on 06/05/2014.
>
> CAP completed on 06/25/2014.

The following is an example of a completed CAP for a relay Misoperation that was applying a standing trip that resulted in the correction and the establishment of a program for further replacements (See also, Example R5b).

> **Example R6b:** Actions: The impedance relay was removed from service on 06/02/2014 because it was applying a standing trip. A failed capacitor was found within the impedance relay and replaced. The impedance relay functioned properly during testing after the capacitor was replaced. The impedance relay was returned to service on 06/05/2014.
>
> A program for wholesale preemptive replacement of capacitors in this type of impedance relay was established on 10/28/2014.
>
> CAP completed on 10/28/2014.

The following is an example of a completed CAP of corrective actions with a timetable that required updating for a failed relay and preemptive actions for similar installations (See also, Example R5c).

> **Example R6c:** Actions: The impedance relay was removed from service on 06/02/2014 because it was applying a standing trip. A failed capacitor was found within the impedance relay and replaced. The impedance relay functioned properly during testing after the capacitor was replaced. The impedance relay was returned to service on 06/05/2014.
>
> The impedance relay capacitor replacement was completed at stations A, B, and C on 08/16/2014. The impedance relay capacitor replacement was completed at stations D, E, and F on 10/24/2014. The impedance relay capacitor replacement for stations G, H, and I were postponed due to resource rescheduling from a scheduled 02/01/15 completion to 04/01/2015 completion. Capacitor replacement was completed on 03/09/2015 at stations G, H, and I. All stations identified in the evaluation have been completed.
>
> CAP completed on 03/09/2015.

The following is an example of a completed CAP for corrective actions with updated actions for a firmware problem and preemptive actions for similar installations. (See also, Example R5d).

> **Example R6d:** Actions: fault records were provided to the manufacturer on 06/04/2014. The manufacturer responded that the Misoperation was caused by a bug in version 2 firmware, and recommended installing version 3 firmware. Version 3 firmware was installed on 08/12/2014.
>
> Nine of the twelve relays were updated to version 3 firmware on 09/23/2014. The manufacturer provided a subsequent update which was determined to be beneficial for the remaining relays. The remaining three of twelve relays identified as having the version 2 firmware were updated to version 3.01 firmware on 11/10/2014.
>
> CAP completed on 11/10/2014.

The CAP is complete when all of the actions identified within the CAP have been completed.

Process Flow Chart: Below is a graphical representation demonstrating the relationships between Requirements:

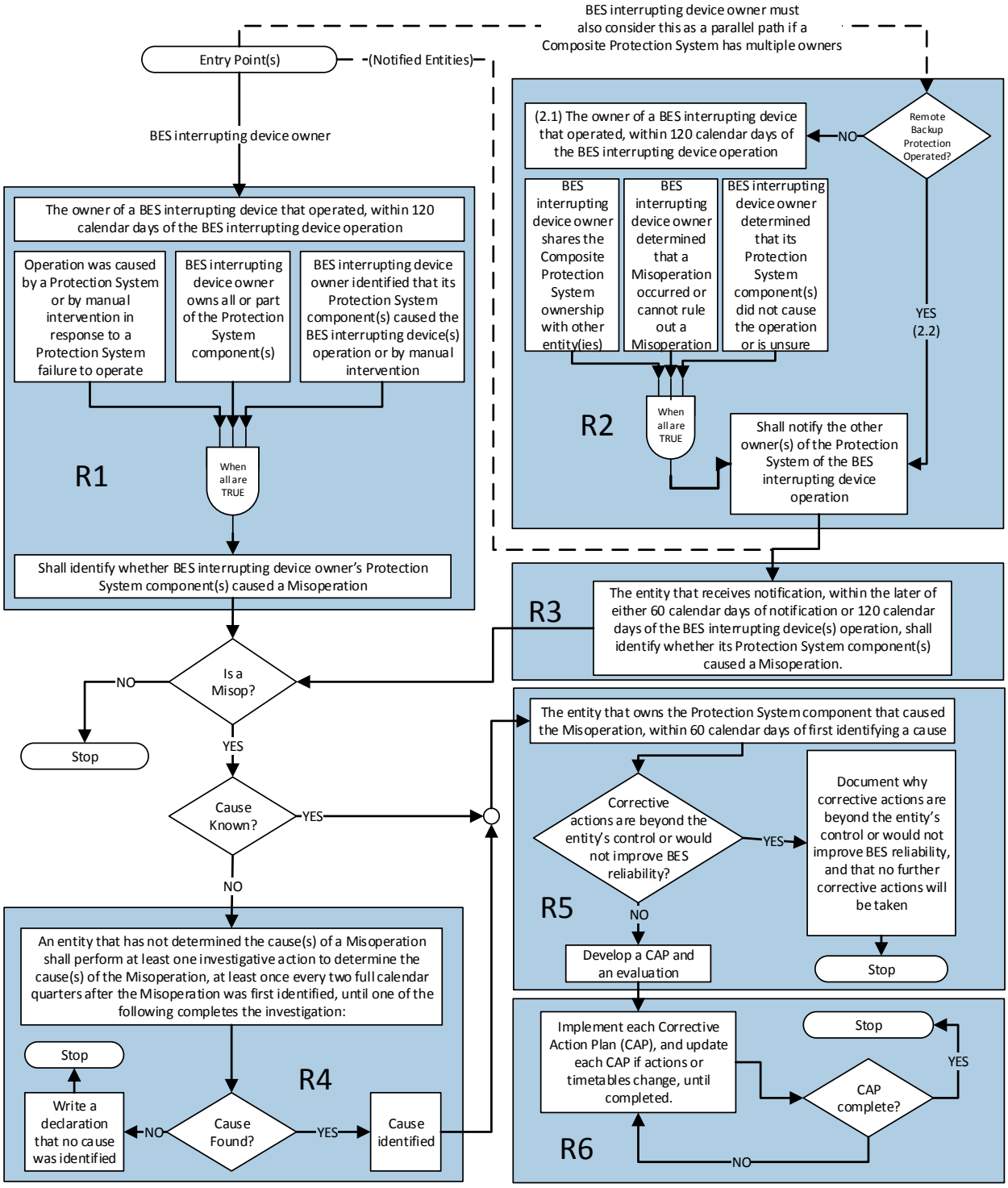
BES interrupting device owner must also consider this as a parallel path if a Composite Protection System has multiple owners
Entry Point(s)
(Notified Entities)
BES interrupting device owner
The owner of a BES interrupting device that operated, within 120 calendar days of the BES interrupting device operation
Operation was caused by a Protection System or by manual intervention in response to a Protection System failure to operate
BES interrupting device owner owns all or part of the Protection System component(s)
BES interrupting device owner identified that its Protection System component(s) caused the BES interrupting device(s) operation or by manual intervention
R1
When all are TRUE
Shall identify whether BES interrupting device owner's Protection System component(s) caused a Misoperation
Is a Misop?
NO
Stop
YES
Cause Known?
YES
NO
An entity that has not determined the cause(s) of a Misoperation shall perform at least one investigative action to determine the cause(s) of the Misoperation, at least once every two full calendar quarters after the Misoperation was first identified, until one of the following completes the investigation:
Stop
R4
Write a declaration that no cause was identified
NO
Cause Found?
YES
Cause identified
(2.1) The owner of a BES interrupting device that operated, within 120 calendar days of the BES interrupting device operation
NO
Remote Backup Protection Operated?
YES (2.2)
BES interrupting device owner shares the Composite Protection System ownership with other entity(ies)
BES interrupting device owner determined that a Misoperation occurred or cannot rule out a Misoperation
BES interrupting device owner determined that its Protection System component(s) did not cause the operation or is unsure
R2
When all are TRUE
Shall notify the other owner(s) of the Protection System of the BES interrupting device operation
R3
The entity that receives notification, within the later of either 60 calendar days of notification or 120 calendar days of the BES interrupting device(s) operation, shall identify whether its Protection System component(s) caused a Misoperation.
The entity that owns the Protection System component that caused the Misoperation, within 60 calendar days of first identifying a cause
Corrective actions are beyond the entity's control or would not improve BES reliability?
YES
Document why corrective actions are beyond the entity's control or would not improve BES reliability, and that no further corrective actions will be taken
Stop
R5
NO
Develop a CAP and an evaluation
Implement each Corrective Action Plan (CAP), and update each CAP if actions or timetables change, until completed.
Stop
CAP complete?
YES
NO
R6

Rationale

During development of this standard, text boxes were embedded within the standard to explain the rationale for various parts of the standard. Upon BOT approval, the text from the rationale text boxes was moved to this section.

Rationale for Introduction

The only revisions made to version of PRC-004-4 are revisions to section 4.2 Facilities to clarify applicability of the Requirements of the standard at generator Facilities. These applicability revisions are intended to clarify and provide for consistent application of the Requirements to BES generator Facilities included in the BES through Inclusion I4 – Dispersed Power Producing Resources.

Rationale for Applicability

Misoperations occurring on the Protection Systems of individual generation resources identified under Inclusion I4 of the BES definition do not have a material impact on BES reliability when considered individually; however, the aggregate capability of these resources may impact BES reliability if a number of Protection Systems on the individual power producing resources incorrectly operated or failed to operate as designed during a system event. To recognize the potential for the Protection Systems of individual power producing resources to affect the reliability of the BES, 4.2.1.5 of the Facilities section reflects the threshold consistent with the revised BES definition. See FERC Order Approving Revised Definition, P 20, Docket No. RD14-2-000. The intent of 4.2.1.5 of the Facilities section is to exclude from the standard requirements these Protection Systems for “common- mode failure” type scenarios affecting less than or equal to 75 MVA aggregated nameplate generating capability at these dispersed generating facilities.

Standard Development Timeline

This section is maintained by the drafting team during the development of the standard and will be removed when the standard becomes effective.

Development Steps Completed

1. NERC Board of Trustees ("Board") adopted PRC-004-4 and PRC-010-1 and retired PRC-022-1 on November 12, 2014.
2. NERC Standards Committee approved initial posting of the standard on February 18, 2015

Description of Current Draft

The UVLSSDT is posting Draft 1 of PRC-004-5 – Protection System Misoperation Identification and Correction for a 45-day initial formal comment period and concurrent/parallel initial ballot in the last ten days of the comment period. The draft contains revisions to the Applicability section to address UVLS equipment.

Anticipated Actions	Date
45-day formal comment period with ballot	February 2015
10-day final ballot	April 2015
Board adoption	May 2015

Project Development Background

The undervoltage load shedding (UVLS) standard drafting team (SDT) was tasked with addressing Misoperation of UVLS equipment during the development of version one of PRC-010 and version three of PRC-004 in Project 2010-05.1 (i.e., Misoperation). This project has been named phase 2 of Project 2008-02 (i.e., UVLS) for clarity purposes. Each SDT for these two projects outlined work necessary to address Misoperation of UVLS equipment. This work was deferred, at the time, because both PRC-010-1 and PRC-004-3 contained dependencies with other projects requiring their completion. This phase two is a continuation of the work performed under the Standards Authorization Request (SAR) for Project 2008-02.

The revisions proposed in Reliability Standard PRC-010-2 meet the following objectives:

- Address the UVLS Misoperation the remaining work due to the retirement of PRC-022-1 (*Undervoltage Load Shedding Program Performance*) during the development of PRC-010-1 (*Undervoltage Load Shedding*)
- Ensure UVLS equipment (i.e., operation or non-operation) within the UVLS Program is assessed and mitigated

Basis for Revision

Originally, Misoperation of UVLS equipment was planned to be appended to a future version of PRC-004 (*Protection System Misoperation Identification and Correction*). The SDT is proposing a two-prong approach by revising both PRC-004 and PRC-010 to address the concern of identifying Misoperations of UVLS equipment in PRC-022-1.

First, the SDT proposes an addition to the Applicability section of PRC-004 to include UVLS that is intended to trip one or more Bulk Electric System (BES) Elements. This is consistent with previous communication to industry about addressing Misoperation of UVLS equipment.[1] Entities will be required to address UVLS that trips a BES Element similarly to other Protection Systems in PRC-004. While the revision to PRC-004 consistent with the communicated approach, the SDT determined that the proposed revision fails to address the performance (operation or non-operations) of UVLS Program equipment not covered by the strict processes of PRC-004.

Second, the SDT is proposing clarifying revisions in PRC-010-2, Requirements R4 and R5 to address UVLS Program equipment performance. These revisions are not requiring UVLS entities to address UVLS protective relays not covered by the strict processes of PRC-004; however, PRC-010-2 is requiring UVLS entities to address the deficiencies (e.g., Misoperations) identified in the assessment performed by Planning Coordinator or Transmission Planner in Requirement R4. Deficiencies include the performance (operation or non-operation) issues of UVLS Program equipment. These deficiencies, if any, are addressed by the UVLS entities through a Corrective Action Plan (CAP) developed in Requirement R5 and executed by the UVLS entities in Requirement R2 of PRC-010.

The term "Misoperation" as defined by the *Glossary of Terms Used in NERC Reliability Standards* is not used within the Requirements of PRC-010; however, the term is used in the Guidelines and Technical Basis section of the standard to provide clarity that UVLS Program equipment deficiencies include Misoperations that are to be corrected by UVLS entities. The PRC-010-2 Reliability Standard mandates that UVLS entities are to correct the deficiencies identified by the Planning Coordinator or Transmission Planner, such as Misoperation of UVLS equipment. Deficiencies are identified through either the periodic assessment or an assessment performed following an event and included in a CAP to the UVLS entity. The structure used by the SDT allows the Planning Coordinator and Transmission Planner to assess UVLS equipment for Misoperation under PRC-010 rather than the Generator Owner, Transmission Owner, and Distribution Provider applicable to the strict processes of PRC-004.

The two-pronged approach ensures that any UVLS Program equipment containing a deficiency is identified and corrected under PRC-010 and UVLS that trips a BES Element under is corrected under PRC-004 to address the requirements in the retired PRC-022-1.

[1] Refer to Implementation Plan for PRC-010-1 (http://www.nerc.com/pa/stand/Pages/PRC0101RI.aspx) and PRC-010-1 (http://www.nerc.com/pa/Stand/Pages/ReliabilityStandards.aspx), Introduction in the Guidelines and Technical Basis, last paragraph.

A. Introduction

1. **Title: Protection System Misoperation Identification and Correction**

2. **Number:** PRC-004-45

3. **Purpose:** Identify and correct the causes of Misoperations of Protection Systems for Bulk Electric System (BES) Elements.

4. **Applicability:**

   4.1. Functional Entities:

   4.1.1 Transmission Owner

   4.1.2 Generator Owner

   4.1.3 Distribution Provider

   4.2. Facilities:

   4.2.1 Protection Systems for BES Elements, with the following exclusions:

   4.2.1.1 Non-protective functions that are embedded within a Protection System.

   4.2.1.2 Protective functions intended to operate as a control function during switching.[2]

   4.2.1.3 Special Protection Systems (SPS).

   4.2.1.4 Remedial Action Schemes (RAS).

   4.2.1.5 Protection Systems of individual dispersed power producing resources identified under Inclusion I4 of the BES definition where the Misoperations affected an aggregate nameplate rating of less than or equal to 75 MVA of BES Facilities.

   4.2.2 Underfrequency load shedding (UFLS) that is intended to trip one or more BES Elements.

   4.2.3 Undervoltage load shedding (UVLS) that is intended to trip one or more BES Elements.

5. **Effective Dates:Date:** See theProject 2008-02.2 Implementation Plan for this Standard..

5. **Background:**

A key factor for BES reliability is the correct performance of Protection Systems. The monitoring of Protection System events for BES Elements, as well as identifying and correcting the causes of Misoperations, will improve Protection System performance. This Reliability Standard PRC-004-3 – Protection System Misoperation Identification and Correction is a revision of PRC-004-2.1a – Analysis and Mitigation of Transmission and Generation Protection System Misoperations. The Reliability Standard PRC-003-1 – Regional Procedure for Analysis of Misoperations of Transmission and Generation

[2] For additional information and examples, see the "Non-Protective Functions" and "Control Functions" sections in the Application Guidelines.

Protection Systems requires Regional Entities to establish procedures for analysis of Misoperations. In the FERC Order No. 693, the Commission identified PRC-003-0 as a "fill-in-the-blank" standard. The Order stated that because the regional procedures had not been submitted, the Commission proposed not to approve or remand PRC-003-0. Because PRC-003-0 (now PRC-003-1) is not enforceable, there is not a mandatory requirement for Regional Entity procedures to support the Requirements of PRC-004-2.1a. This is a potential reliability gap; consequently, PRC-004-3 combines the reliability intent of the two legacy standards PRC-003-1 and PRC-004-2.1a.

This project includes revising the existing definition of Misoperation, which reads:

Misoperation

- Any failure of a Protection System element to operate within the specified time when a fault or abnormal condition occurs within a zone of protection.
- Any operation for a fault not within a zone of protection (other than operation as backup protection for a fault in an adjacent zone that is not cleared within a specified time for the protection for that zone).
- Any unintentional Protection System operation when no fault or other abnormal condition has occurred unrelated to on-site maintenance and testing activity.

In general, this definition needed more specificity and clarity. The terms "specified time" and "abnormal condition" are ambiguous. In the third bullet, more clarification is needed as to whether an unintentional Protection System operation for an atypical, yet explainable, condition is a Misoperation.

The SAR for this project also included clarifying reporting requirements. Misoperation data, as currently collected and reported, is not optimal to establish consistent metrics for measuring Protection System performance. As such, the data reporting obligation for this standard is being removed and is being developed under the NERC Rules of Procedure, Section 1600 – Request for Data or Information ("data request"). As a result of the data request, NERC will analyze the data to: develop meaningful metrics; identify trends in Protection System performance that negatively impact reliability; identify remediation techniques; and publicize lessons learned for the industry. The removal of the data collection obligation from the standard does not result in a reduction of reliability. The standard and data request have been developed in a manner such that evidence used for compliance with the standard and data request are intended to be independent of each other.

The proposed Requirements of the revised Reliability Standard PRC-004-3 meet the following objectives:

- Review all Protection System operations on the BES to identify those that are Misoperations of Protection Systems for Facilities that are part of the BES.
- Analyze Misoperations of Protection Systems for Facilities that are part of the BES to identify the cause(s).

- ~~Develop and implement Corrective Action Plans to address the cause(s) of Misoperations of Protection Systems for Facilities that are part of the BES.~~

~~Misoperations associated with Special Protection Schemes (SPS) and Remedial Action Schemes (RAS) are not addressed in this standard due to their inherent complexities. NERC plans to handle SPS and RAS in the second phase of this project.~~

~~The Western Electric Coordinating Council (WECC) Regional Reliability Standard PRC-004-WECC-1 – Protection System and Remedial Action Scheme Misoperation relates to the reporting of Misoperations of Protection Systems and RAS for a limited set of WECC Paths. The WECC region plans to conduct work to harmonize the regional standard with this continent-wide proposed standard and the second phase of this project concerning SPS and RAS.~~

~~Undervoltage load shedding (UVLS) has not been included in this standard's applicability because Misoperations of UVLS relays are currently addressed by Reliability Standard PRC-022-1 – Under-Voltage Load Shedding Program Performance, Requirement R1.5. Underfrequency load shedding (UFLS) was added to PRC-004-3 to close a gap in reliability as Misoperations of UFLS relays are not covered by a Reliability Standard currently.~~

B. Requirements and Measures

R1. Each Transmission Owner, Generator Owner, and Distribution Provider that owns a BES interrupting device that operated under the circumstances in Parts 1.1 through 1.3 shall, within 120 calendar days of the BES interrupting device operation, identify whether its Protection System component(s) caused a Misoperation: *[Violation Risk Factor: Medium][Time Horizon: Operations Assessment, Operations Planning]*

1.1 The BES interrupting device operation was caused by a Protection System or by manual intervention in response to a Protection System failure to operate; and

1.2 The BES interrupting device owner owns all or part of the Composite Protection System; and

1.3 The BES interrupting device owner identified that its Protection System component(s) caused the BES interrupting device(s) operation or was caused by manual intervention in response to its Protection System failure to operate.

M1. Each Transmission Owner, Generator Owner, and Distribution Provider shall have dated evidence that demonstrates it identified the Misoperation of its Protection System component(s), if any, that meet the circumstances in Requirement R1, Parts 1.1, 1.2, and 1.3 within the allotted time period. Acceptable evidence for Requirement R1, including Parts 1.1, 1.2, and 1.3 may include, but is not limited to the following dated documentation (electronic or hardcopy format): reports, databases, spreadsheets, emails, facsimiles, lists, logs, records, declarations, analyses of sequence of events, relay targets, Disturbance Monitoring Equipment (DME) records, test results, or transmittals.

R2. Each Transmission Owner, Generator Owner, and Distribution Provider that owns a BES interrupting device that operated shall, within 120 calendar days of the BES interrupting device operation, provide notification as described in Parts 2.1 and 2.2. *[Violation Risk Factor: Medium][Time Horizon: Operations Assessment, Operations Planning]*

2.1 For a BES interrupting device operation by a Composite Protection System or by manual intervention in response to a Protection System failure to operate, notification of the operation shall be provided to the other owner(s) that share Misoperation identification responsibility for the Composite Protection System under the following circumstances:

2.1.1 The BES interrupting device owner shares the Composite Protection System ownership with any other owner; and

2.1.2 The BES interrupting device owner has determined that a Misoperation occurred or cannot rule out a Misoperation; and

2.1.3 The BES interrupting device owner has determined that its Protection System component(s) did not cause the BES interrupting device(s) operation or cannot determine whether its Protection System components caused the BES interrupting device(s) operation.

2.2 For a BES interrupting device operation by a Protection System component intended to operate as backup protection for a condition on another entity's BES Element, notification of the operation shall be provided to the other Protection System owner(s) for which that backup protection was provided.

M2. Each Transmission Owner, Generator Owner, and Distribution Provider shall have dated evidence that demonstrates notification to the other owner(s), within the allotted time period for either Requirement R2, Part 2.1, including subparts 2.1.1, 2.1.2, and 2.1.3 and Requirement R2, Part 2.2. Acceptable evidence for Requirement R2, including Parts 2.1 and 2.2 may include, but is not limited to the following dated documentation (electronic or hardcopy format): emails, facsimiles, or transmittals.

R3. Each Transmission Owner, Generator Owner, and Distribution Provider that receives notification, pursuant to Requirement R2 shall, within the later of 60 calendar days of notification or 120 calendar days of the BES interrupting device(s) operation, identify whether its Protection System component(s) caused a Misoperation. *[Violation Risk Factor: Medium][Time Horizon: Operations Assessment, Operations Planning]*

M3. Each Transmission Owner, Generator Owner, and Distribution Provider shall have dated evidence that demonstrates it identified whether its Protection System component(s) caused a Misoperation within the allotted time period. Acceptable evidence for Requirement R3 may include, but is not limited to the following dated documentation (electronic or hardcopy format): reports, databases, spreadsheets, emails, facsimiles, lists, logs, records, declarations, analyses of sequence of events, relay targets, DME records, test results, or transmittals.

R4. Each Transmission Owner, Generator Owner, and Distribution Provider that has not determined the cause(s) of a Misoperation, for a Misoperation identified in accordance with Requirement R1 or R3, shall perform investigative action(s) to determine the cause(s) of the Misoperation at least once every two full calendar quarters after the Misoperation was first identified, until one of the following completes the investigation: *[Violation Risk Factor: Medium] [Time Horizon: Operations Assessment, Operations Planning]*

- The identification of the cause(s) of the Misoperation; or
- A declaration that no cause was identified.

M4. Each Transmission Owner, Generator Owner, and Distribution Provider shall have dated evidence that demonstrates it performed at least one investigative action according to Requirement R4 every two full calendar quarters until a cause is identified or a declaration is made. Acceptable evidence for Requirement R4 may include, but is not limited to the following dated documentation (electronic or hardcopy format): reports, databases, spreadsheets, emails, facsimiles, lists, logs, records, declarations, analyses of sequence of events, relay targets, DME records, test results, or transmittals.

R5. Each Transmission Owner, Generator Owner, and Distribution Provider that owns the Protection System component(s) that caused the Misoperation shall, within 60 calendar days of first identifying a cause of the Misoperation: [*Violation Risk Factor: Medium*] [*Time Horizon: Operations Planning, Long-Term Planning*]

- Develop a Corrective Action Plan (CAP) for the identified Protection System component(s), and an evaluation of the CAP's applicability to the entity's other Protection Systems including other locations; or
- Explain in a declaration why corrective actions are beyond the entity's control or would not improve BES reliability, and that no further corrective actions will be taken.

M5. Each Transmission Owner, Generator Owner, and Distribution Provider shall have dated evidence that demonstrates it developed a CAP and an evaluation of the CAP's applicability to other Protection Systems and locations, or a declaration in accordance with Requirement R5. Acceptable evidence for Requirement R5 may include, but is not limited to the following dated documentation (electronic or hardcopy format): CAP and evaluation, or declaration.

R6. Each Transmission Owner, Generator Owner, and Distribution Provider shall implement each CAP developed in Requirement R5, and update each CAP if actions or timetables change, until completed. *[Violation Risk Factor: Medium][Time Horizon: Operations Planning, Long-Term Planning]*

M6. Each Transmission Owner, Generator Owner, and Distribution Provider shall have dated evidence that demonstrates it implemented each CAP, including updating actions or timetables. Acceptable evidence for Requirement R6 may include, but is not limited to the following dated documentation (electronic or hardcopy format): records that document the implementation of each CAP and the completion of actions for each CAP including revision history of each CAP. Evidence may also include work management program records, work orders, and maintenance records.

C. Compliance

1. Compliance Monitoring Process

1.1. Compliance Enforcement Authority

As defined in the NERC Rules of Procedure, "Compliance Enforcement Authority" (CEA) means NERC or the Regional Entity in their respective roles of monitoring and enforcing compliance with the NERC Reliability Standards.

1.2. Evidence Retention

The following evidence retention periods identify the period of time an entity is required to retain specific evidence to demonstrate compliance. For instances where the evidence retention period specified below is shorter than the time since the last audit, the CEA may ask an entity to provide other evidence to show that it was compliant for the full time period since the last audit.

The Transmission Owner, Generator Owner, and Distribution Provider shall keep data or evidence to show compliance as identified below unless directed by its CEA to retain specific evidence for a longer period of time as part of an investigation.

The Transmission Owner, Generator Owner, and Distribution Provider shall retain evidence of Requirements R1, R2, R3, and R4, Measures M1, M2, M3, and M4 for a minimum of 12 calendar months following the completion of each Requirement.

The Transmission Owner, Generator Owner, and Distribution Provider shall retain evidence of Requirement R5, Measure M5, including any supporting analysis per Requirements R1, R2, R3, and R4, for a minimum of 12 calendar months following completion of each CAP, completion of each evaluation, and completion of each declaration.

The Transmission Owner, Generator Owner, and Distribution Provider shall retain evidence of Requirement R6, Measure M6 for a minimum of 12 calendar months following completion of each CAP.

If a Transmission Owner, Generator Owner, or Distribution Provider is found non-compliant, it shall keep information related to the non-compliance until mitigation is complete and approved, or for the time specified above, whichever is longer.

The CEA shall keep the last audit records and all requested and submitted subsequent audit records.

1.3. Compliance Monitoring and Assessment Processes

Compliance Audit

Self-Certification

Spot Checking

Compliance Investigation

Self-Reporting

Complaint

1.4. Additional Compliance Information

None.

D. Table of Compliance Elements

R #	Time Horizon	VRF	Violation Severity Levels			
			Lower VSL	Moderate VSL	High VSL	Severe VSL
R1	Operations Assessment, Operations Planning	Medium	The responsible entity identified whether its Protection System component(s) caused a Misoperation in accordance with Requirement R1, but in more than 120 calendar days and less than or equal to 150 calendar days of the BES interrupting device operation.	The responsible entity identified whether its Protection System component(s) caused a Misoperation in accordance with Requirement R1, but in more than 150 calendar days and less than or equal to 165 calendar days of the BES interrupting device operation.	The responsible entity identified whether its Protection System component(s) caused a Misoperation in accordance with Requirement R1, but in more than 165 calendar days and less than or equal to 180 calendar days of the BES interrupting device operation.	The responsible entity identified whether its Protection System component(s) caused a Misoperation in accordance with Requirement R1, but in more than 180 calendar days of the BES interrupting device operation. OR The responsible entity failed to identify whether its Protection System component(s) caused a Misoperation in accordance with Requirement R1.

R #	Time Horizon	VRF	Violation Severity Levels			
			Lower VSL	Moderate VSL	High VSL	Severe VSL
R2	Operations Assessment, Operations Planning	Medium	The responsible entity notified the other owner(s) of the Protection System component(s) in accordance with Requirement R2, but in more than 120 calendar days and less than or equal to 150 calendar days of the BES interrupting device operation.	The responsible entity notified the other owner(s) of the Protection System component(s) in accordance with Requirement R2, but in more than 150 calendar days and less than or equal to 165 calendar days of the BES interrupting device operation.	The responsible entity notified the other owner(s) of the Protection System component(s) in accordance with Requirement R2, but in more than 165 calendar days and less than or equal to 180 calendar days of the BES interrupting device operation.	The responsible entity notified the other owner(s) of the Protection System component(s) in accordance with Requirement R2, but in more than 180 calendar days of the BES interrupting device operation. OR The responsible entity failed to notify one or more of the other owner(s) of the Protection System component(s) in accordance with Requirement R2.

R #	Time Horizon	VRF	Violation Severity Levels			
			Lower VSL	Moderate VSL	High VSL	Severe VSL
R3	Operations Assessment, Operations Planning	Medium	The responsible entity identified whether or not its Protection System component(s) caused a Misoperation in accordance with Requirement R3, but was less than or equal to 30 calendar days late.	The responsible entity identified whether or not its Protection System component(s) caused a Misoperation in accordance with Requirement R3, but was greater than 30 calendar days and less than or equal to 45 calendar days late.	The responsible entity identified whether or not its Protection System component(s) caused a Misoperation in accordance with Requirement R3, but was greater than 45 calendar days and less than or equal to 60 calendar days late.	The responsible entity identified whether or not its Protection System component(s) caused a Misoperation in accordance with Requirement R3, but was greater than 60 calendar days late. OR The responsible entity failed to identify whether or not a Misoperation of its Protection System component(s) occurred in accordance with Requirement R3.

R #	Time Horizon	VRF	Violation Severity Levels			
			Lower VSL	Moderate VSL	High VSL	Severe VSL
R4	Operations Assessment, Operations Planning	Medium	The responsible entity performed at least one investigative action in accordance with Requirement R4, but was less than or equal to one calendar quarter late.	The responsible entity performed at least one investigative action in accordance with Requirement R4, but was greater than one calendar quarter and less than or equal to two calendar quarters late.	The responsible entity performed at least one investigative action in accordance with Requirement R4, but was greater than two calendar quarters and less than or equal to three calendar quarters late.	The responsible entity performed at least one investigative action in accordance with Requirement R4, but was more than three calendar quarters late. OR The responsible entity failed to perform investigative action(s) in accordance with Requirement R4.

R #	Time Horizon	VRF	Violation Severity Levels			
			Lower VSL	Moderate VSL	High VSL	Severe VSL
R5	Operations Planning, Long-Term Planning	Medium	The responsible entity developed a CAP, or explained in a declaration in accordance with Requirement R5, but in more than 60 calendar days and less than or equal to 70 calendar days of first identifying a cause of the Misoperation. OR (See next page)	The responsible entity developed a CAP, or explained in a declaration in accordance with Requirement R5, but in more than 70 calendar days and less than or equal to 80 calendar days of first identifying a cause of the Misoperation. OR (See next page)	The responsible entity developed a CAP, or explained in a declaration in accordance with Requirement R5, but in more than 80 calendar days and less than or equal to 90 calendar days of first identifying a cause of the Misoperation. OR (See next page)	The responsible entity developed a CAP, or explained in a declaration in accordance with Requirement R5, but in more than 90 calendar days of first identifying a cause of the Misoperation. OR The responsible entity failed to develop a CAP or explain in a declaration in accordance with Requirement R5. OR (See next page)

R #	Time Horizon	VRF	Violation Severity Levels			
			Lower VSL	Moderate VSL	High VSL	Severe VSL
R5	(Continued)		The responsible entity developed an evaluation in accordance with Requirement R5, but in more than 60 calendar days and less than or equal to 70 calendar days of first identifying a cause of the Misoperation.	The responsible entity developed an evaluation in accordance with Requirement R5, but in more than 70 calendar days and less than or equal to 80 calendar days of first identifying a cause of the Misoperation.	The responsible entity developed an evaluation in accordance with Requirement R5, but in more than 80 calendar days and less than or equal to 90 calendar days of first identifying a cause of the Misoperation.	The responsible entity developed an evaluation in accordance with Requirement R5, but in more than 90 calendar days of first identifying a cause of the Misoperation. OR The responsible entity failed to develop an evaluation in accordance with Requirement R5.
R6	Operations Planning, Long-Term Planning	Medium	The responsible entity implemented, but failed to update a CAP, when actions or timetables changed, in accordance with Requirement R6.	N/A	N/A	The responsible entity failed to implement a CAP in accordance with Requirement R6.

E. Regional Variances

None.

F. Interpretations

None.

G. Associated Documents

NERC System Protection and Controls Subcommittee of the NERC Planning Committee, Assessment of Standards: PRC-003-1 – Regional Procedure for Analysis of Misoperations of Transmission and Generation Protection Systems, PRC-004-1 – Analysis and Mitigation of Transmission and Generation Protection Misoperations, PRC-016-1 – Special Protection System Misoperations, May 22, 2009.[3]

Version History

Version	Date	Action	Change Tracking
0	April 1, 2005	Effective Date	New
1	December 1, 2005	1. Changed incorrect use of certain hyphens (-) to "en dash" (–) and "em dash (—)." 2. Added "periods" to items where appropriate. 3. Changed "Timeframe" to "Time Frame" in item D, 1.2.	01/20/06
~~2~~		~~Modified to address Order No. 693 Directives contained in paragraph 1469.~~	~~Revised~~
~~2~~	~~August 5, 2010~~	~~Adopted by NERC Board of Trustees~~	

[3] http://www.nerc.com/comm/PC/System%20Protection%20and%20Control%20Subcommittee%20SPCS%20DL/PRC-003-004-016%20Report.pdf

Version	Date	Action	Change Tracking
1a	February 17, 2011	Adopted by NERC Board of Trustees~~Added Appendix 1 - Interpretation regarding applicability of standard to protection of radially connected transformers~~	Project 2009-17 interpretation adding Appendix 1 - Interpretation regarding applicability of standard to protection of radially connected transformers
~~1a~~	~~February 17, 2011~~	~~Adopted by NERC Board of Trustees~~	
1a	September 26, 2011	Appended FERC~~ Order issued approving the~~ approved interpretation of R1 and R3 ~~(FERC's Order is effective as of September 26, 2011)~~to version 1	FERC's Order approving the interpretation of R1 and R3 is effective as of September 26, 2011
2	August 5, 2010	Adopted by NERC Board of Trustees	Project 2010-12 modifications to address Order No. 693 Directives contained in paragraph 1469
2a	September 26, 2011	Appended FERC-approved interpretation of R1 and R3 to version 2	FERC's Order approving the interpretation of R1 and R3 is effective as of September 26, 2011
2.1a	February 9, 2012	~~Errata change: Edited R2 to add "…and generator interconnection Facility…"~~Adopted by NERC Board of Trustees	~~Revision~~Errata change under Project 2010-07 to add "…and generator interconnection Facility…"

Version	Date	Action	Change Tracking
~~2.1a~~	~~February 9, 2012~~	~~Errata change adopted by NERC Board of Trustees~~	
~~2.1a~~	~~September 19, 2013~~	~~FERC Order issued approving PRC-004-2.1a (approval becomes effective November 25, 2013).~~	
3	August 14, 2014	Adopted by NERC Board of Trustees	Revision under Project 2010-05.1
4	November 13, 2014	Adopted by NERC Board of Trustees	~~**Standad i**~~ Applicability ~~revised~~revision under Project 2014-01 to clarify application of Requirements to BES dispersed power producing resources~~. n November 13, 2014 Project 2014-01~~
5		Adopted by NERC Board of Trustees	Revision under Project 2008-02.2

Guidelines and Technical Basis

Introduction

This standard addresses the reliability issues identified in the letter[4] from Gerry Cauley, NERC President and CEO, dated January 7, 2011.

> "Nearly all major system failures, excluding perhaps those caused by severe weather, have misoperations of relays or automatic controls as a factor contributing to the propagation of the failure. …Relays can misoperate, either operate when not needed or fail to operate when needed, for a number of reasons. First, the device could experience an internal failure – but this is rare. Most commonly, relays fail to operate correctly due to incorrect settings, improper coordination (of timing and set points) with other devices, ineffective maintenance and testing, or failure of communications channels or power supplies. Preventable errors can be introduced by field personnel and their supervisors or more programmatically by the organization."

The standard also addresses the findings in the *2011 Risk Assessment of Reliability Performance*[5]; July 2011.

> "…a number of multiple outage events were initiated by protection system Misoperations. These events, which go beyond their design expectations and operating procedures, represent a tangible threat to reliability. A deeper review of the root causes of dependent and common mode events, which include three or more automatic outages, is a high priority for NERC and the industry."

The *State of Reliability 2014*[6] report continued to identify Protection System Misoperations as a significant contributor to automatic transmission outage severity. The report recommended completion of the development of PRC-004-3 as part of the solution to address Protection System Misoperations.

Definitions

The Misoperation definition is based on the IEEE/PSRC Working Group I3 "Transmission Protective Relay System Performance Measuring Methodology[7]." Misoperations of a Protection System include failure to operate, slowness in operating, or operating when not required either during a Fault or non-Fault condition.

---

4 http://www.nerc.com/pa/Stand/Project%20201005%20Protection%20System%20Misoperations%20DL/20110209130708-Cauley%20letter.pdf

5 "2011 Risk Assessment of Reliability Performance." NERC. http://www.nerc.com/files/2011_RARPR_FINAL.pdf. July 2011. Pg. 3.

6 "State of Reliability 2014." NERC. http://www.nerc.com/pa/Stand/Pages/RelaibilityCoordinationProject20066.aspx. May 2014. Pg. 18 of 106.

7 "Transmission Protective Relay System Performance Measuring Methodology." Working Group I3 of Power System Relaying Committee of IEEE Power Engineering Society. 1999.

For reference, a "Protection System" is defined in the *Glossary of Terms Used in NERC Reliability Standards* ("NERC Glossary") as:

- Protective relays which respond to electrical quantities,
- Communications systems necessary for correct operation of protective functions,
- Voltage and current sensing devices providing inputs to protective relays,
- Station dc supply associated with protective functions (including station batteries, battery chargers, and non-battery-based dc supply), and
- Control circuitry associated with protective functions through the trip coil(s) of the circuit breakers or other interrupting devices.

A BES interrupting device is a BES Element, typically a circuit breaker or circuit switcher that has the capability to interrupt fault current. Although BES interrupting device mechanisms are not part of a Protection System, the standard uses the operation of a BES interrupting device by a Protection System to initiate the review for Misoperation.

The following two definitions are being proposed for inclusion in the NERC Glossary:

> **Composite Protection System –** *The total complement of Protection System(s) that function collectively to protect an Element. Backup protection provided by a different Element's Protection System(s) is excluded.*

The Composite Protection System definition is based on the principle that an Element's multiple layers of protection are intended to function collectively. This definition has been introduced in this standard and incorporated into the proposed definition of Misoperation to clarify that the overall performance of an Element's total complement of protection should be considered while evaluating an operation.

Composite Protection System – Line Example

The Composite Protection System of the Alpha-Beta line (Circuit #123) is comprised of current differential, permissive overreaching transfer trip (POTT), step distance (classic zone 1, zone 2, and zone 3), instantaneous-overcurrent, time-overcurrent, out-of-step, and overvoltage protection. The protection is housed at the Alpha and Beta substations, and includes the associated relays, communications systems, voltage and current sensing devices, DC supplies, and control circuitry.

Composite Protection System – Transformer Example

The Composite Protection System of the Alpha transformer (#2) is comprised of internal differential, overall differential, instantaneous-overcurrent, and time-overcurrent protection. The protection is housed at the Alpha substation, and includes the associated relays, voltage and current sensing devices, DC supplies, and control circuitry.

Composite Protection System – Generator Example

The Composite Protection System of the Beta generator (#3) is comprised of generator differential, overall differential, overcurrent, stator ground, reverse power, volts per hertz, loss-of-field, and undervoltage protection. The protection is housed at the Beta generating plant and at the Beta substation, and includes the associated relays, voltage and current sensing devices, DC supplies, and control circuitry.

Composite Protection System – Breaker Failure Example

Breaker failure protection provides backup protection for the breaker, and therefore is part of the breaker's Composite Protection System. Considering breaker failure protection to be part of another Element's Composite Protection System could lead to an incorrect conclusion that a breaker failure operation automatically satisfies the "Slow Trip" criteria of the Misoperation definition.

- An example of a correct operation of the breaker's Composite Protection System is when the breaker failure relaying tripped because the line relaying operated, but the breaker failed to clear the Fault. The breaker failure relaying operated because of a failed trip coil. The failed trip coil caused a Misoperation of the line's Composite Protection System.
- An example of a correct operation of the breaker's Composite Protection System is when the breaker failure relaying tripped because the line relaying operated, but the breaker failed to clear the Fault. Only the breaker failure relaying operated because of a failed breaker mechanism. This was not a Misoperation because the breaker mechanism is not part of the breaker's Composite Protection System.
- An example of an "Unnecessary Trip – During Fault" is when the breaker failure relaying tripped at the same time as the line relaying during a Fault. The Misoperation was due to the breaker failure timer being set to zero.

Misoperation – *The failure a Composite Protection System to operate as intended for protection purposes. Any of the following is a Misoperation:*

1. **Failure to Trip – During Fault** *– A failure of a Composite Protection System to operate for a Fault condition for which it is designed. The failure of a Protection System component is not a Misoperation as long as the performance of the Composite Protection System is correct.*
2. ***Failure to Trip – Other Than Fault*** *– A failure of a Composite Protection System to operate for a non-Fault condition for which it is designed, such as a power swing, undervoltage, overexcitation, or loss of excitation. The failure of a Protection System component is not a Misoperation as long as the performance of the Composite Protection System is correct.*

3. ***Slow Trip – During Fault*** *– A Composite Protection System operation that is slower than required for a Fault condition if the duration of its operating time resulted in the operation of at least one other Element's Composite Protection System.*
4. ***Slow Trip – Other Than Fault*** *– A Composite Protection System operation that is slower than required for a non-Fault condition, such as a power swing, undervoltage, overexcitation, or loss of excitation, if the duration of its operating time resulted in the operation of at least one other Element's Composite Protection System.*
5. ***Unnecessary Trip – During Fault*** *– An unnecessary Composite Protection System operation for a Fault condition on another Element.*
6. ***Unnecessary Trip – Other Than Fault*** *– An unnecessary Composite Protection System operation for a non-Fault condition. A Composite Protection System operation that is caused by personnel during on-site maintenance, testing, inspection, construction, or commissioning activities is not a Misoperation.*

The Misoperation definition is based on the principle that an Element's total complement of protection is intended to operate dependably and securely.

- Failure to automatically reclose after a Fault condition is not included as a Misoperation because reclosing equipment is not included within the definition of Protection System.
- A breaker failure operation does not, in itself, constitute a Misoperation.
- A remote backup operation resulting from a "Failure to Trip" or a "Slow Trip" does not, in itself, constitute a Misoperation.

This proposed definition of Misoperation provides additional clarity over the current version. A Misoperation is the failure of a Composite Protection System to operate as intended for protection purposes. The definition includes six categories which provide further differentiation of what constitutes a Misoperation. These categories are discussed in greater detail in the following sections.

Failure to Trip – During Fault

This category of Misoperation typically results in the Fault condition being cleared by remote backup Protection System operation.

Example 1a: A failure of a transformer's Composite Protection System to operate for a transformer Fault is a Misoperation.

Example 1b: A failure of a "primary" transformer relay (or any other component) to operate for a transformer Fault is not a "Failure to Trip – During Fault" Misoperation as long as another component of the transformer's Composite Protection System operated.

Example 1c: A lack of target information does not by itself constitute a Misoperation. When a high-speed pilot system does not target because a high-speed zone element trips first, it would not in and of itself be a Misoperation.

Example 1d: A failure of an overall differential relay to operate is not a "Failure to Trip – During Fault" Misoperation as long as another component such as a generator differential relay operated.

Example 1e: The Composite Protection System for a bus does not operate during a bus Fault which results in the operation of all local transformer Protection Systems connected to that bus and all remote line Protection Systems connected to that bus isolating the faulted bus from the grid. The operation of the local transformer Protection Systems and the operation of all remote line Protection Systems correctly provided backup protection. There is one "Failure to Trip – During Fault" Misoperation of the bus Composite Protection System.

In analyzing the Protection System for Misoperation, the entity must also consider whether the "Slow Trip – During Fault" category applies to the operation.

Failure to Trip – Other Than Fault

This category of Misoperation may have resulted in operator intervention. The "Failure to Trip – Other Than Fault" conditions cited in the definition are examples only, and do not constitute an all-inclusive list.

Example 2a: A failure of a generator's Composite Protection System to operate for an unintentional loss of field condition is a Misoperation.

Example 2b: A failure of an overexcitation relay (or any other component) is not a "Failure to Trip – Other Than Fault" Misoperation as long as the generator's Composite Protection System operated as intended isolating the generator from the BES.

In analyzing the Protection System for Misoperation, the entity must also consider whether the "Slow Trip – Other Than Fault" category applies to the operation.

Slow Trip – During Fault

This category of Misoperation typically results in remote backup Protection System operation before the Fault is cleared.

Example 3a: A Composite Protection System that is slower than required for a Fault condition is a Misoperation if the duration of its operating time resulted in the operation of at least one other Element's Composite Protection System. The current differential element of a multiple function relay failed to operate for a line Fault. The same relay's time-overcurrent element operated after a time delay. However, an adjacent line also operated from a time-overcurrent element. The faulted line's time-overcurrent element was found to be set to trip too slowly.

Example 3b: A failure of a breaker's Composite Protection System to operate as quickly as intended to meet the expected critical Fault clearing time for a line Fault in conjunction with a breaker failure (i.e., stuck breaker) is a Misoperation if it resulted in an unintended operation of at least one other Element's Composite Protection System. If a generating unit's Composite Protection System operates due to instability caused by the slow trip of the breaker's Composite Protection System, it is not an "Unnecessary Trip – During Fault" Misoperation of the generating unit's Composite Protection System. This event would be a "Slow Trip – During Fault" Misoperation of the breaker's Composite Protection System.

> **Example 3c:** A line connected to a generation interconnection station is protected with two independent high-speed pilot systems. The Composite Protection System for this line also includes step distance and time-overcurrent schemes in addition to the two pilot systems. During a Fault on this line, the two pilot systems fail to operate and the time-overcurrent scheme operates clearing the Fault with no generating units or other Elements tripping (i.e., no over-trips). This event is not a Misoperation.

The phrase “slower than required” means the duration of its operating time resulted in the operation of at least one other Element’s Composite Protection System. It would be impractical to provide a precise tolerance in the definition that would be applicable to every type of Protection System. Rather, the owner(s) reviewing each Protection System operation should understand whether the speed and outcome of its Protection System operation met their objective. The intent is not to require documentation of exact Protection System operation times, but to assure consideration of relay coordination and system stability by the owner(s) reviewing each Protection System operation.

The phrase “resulted in the operation of any other Composite Protection System” refers to the need to ensure that relaying operates in the proper or planned sequence (i.e., the primary relaying for a faulted Element operates before the remote backup relaying for the faulted Element).

In analyzing the Protection System for Misoperation, the entity must also consider the “Unnecessary Trip – During Fault” category to determine if an “unnecessary trip” applies to the Protection System operation of an Element other than the faulted Element.

If a coordination error was at the local terminal (i.e., set too slow), then it was a "Slow Trip," category of Misoperation at the local terminal.

Slow Trip – Other Than Fault

The phrase “slower than required” means the duration of its operating time resulted in the operation of at least one other Element’s Composite Protection System. It would be impractical to provide a precise tolerance in the definition that would be applicable to every type of Protection System. Rather, the owner(s) reviewing each Protection System operation should understand whether the speed and outcome of its Protection System operation met their objective. The intent is not to require documentation of exact Protection System operation times, but to assure consideration of relay coordination and system stability by the owner(s) reviewing each Protection System operation.

> **Example 4:** A phase to phase fault occurred on the terminals of a generator. The generator's Composite Protection System and a transmission line's Composite Protection System both operated in response to the fault. It was found during subsequent investigation that the generator protection contained an inappropriate time delay. This caused the transmission line's correctly set overreaching zone of protection to operate. This was a Misoperation of the generator’s Composite Protection System, but not of the transmission line’s Composite Protection System.

The “Slow Trip – Other Than Fault” conditions cited in the definition are examples only, and do not constitute an all-inclusive list.

Unnecessary Trip – During Fault

An operation of a properly coordinated remote Protection System is not in and of itself a Misoperation if the Fault has persisted for a sufficient time to allow the correct operation of the Composite Protection System of the faulted Element to clear the Fault. A BES interrupting device failure, a "failure to trip" Misoperation, or a "slow trip" Misoperation may result in a proper remote Protection System operation.

> **Example 5:** An operation of a transformer's Composite Protection System which trips (i.e., over-trips) for a properly cleared line Fault is a Misoperation. The Fault is cleared properly by the faulted equipment's Composite Protection System (i.e., line relaying) without the need for an external Protection System operation resulting in an unnecessary trip of the transformer protection; therefore, the transformer Protection System operation is a Misoperation.
>
> **Example 5b:** An operation of a line's Composite Protection System which trips (i.e., over-trips) for a properly cleared Fault on a different line is a Misoperation. The Fault is cleared properly by the faulted line's Composite Protection System (i.e., line relaying); however, elsewhere in the system, a carrier blocking signal is not transmitted (e.g., carrier ON/OFF switch found in OFF position) resulting in the operation of a remote Protection System, single-end trip of a non-faulted line. The operation of the Protection System for the non-faulted line is an unnecessary trip during a Fault. Therefore, the non-faulted line Protection System operation is an "Unnecessary Trip – During Fault" Misoperation.
>
> **Example 5c:** If a coordination error was at the remote terminal (i.e., set too fast), then it was an "Unnecessary Trip – During Fault" category of Misoperation at the remote terminal.

Unnecessary Trip – Other Than Fault

Unnecessary trips for non-Fault conditions include but are not limited to: power swings, overexcitation, loss of excitation, frequency excursions, and normal operations.

> **Example 6a:** An operation of a line's Composite Protection System due to a relay failure during normal operation is a Misoperation.
>
> **Example 6b:** Tripping a generator by the operation of the loss of field protection during an off-nominal frequency condition while the field is intact is a Misoperation assuming the Composite Protection System was not intended to operate under this condition.
>
> **Example 6c:** An impedance line relay trip for a power swing that entered the relay's characteristic is a Misoperation if the power swing was stable and the relay operated because power swing blocking was enabled and should have prevented the trip, but did not.
>
> **Example 6d:** Tripping a generator operating at normal load by the operation of a reverse power protection relay due to a relay failure is a Misoperation.

Additionally, an operation that occurs during a non-Fault condition but was initiated directly by on-site (i.e., real-time) maintenance, testing, inspection, construction, or commissioning is not a Misoperation.

> **Example 6e:** A BES interrupting device operation that occurs at the remote end of a line during a non-Fault condition because a direct transfer trip was initiated by system maintenance and testing activities at the local end of the line is not a Misoperation because of the maintenance exclusion in category 6 of the definition of "Misoperation."

The "on-site" activities at one location that initiates a trip to another location are included in this exemption. This includes operation of a Protection System when energizing equipment to facilitate measurements, such as verification of current circuits as a part of performing commissioning; however, once the maintenance, testing, inspection, construction, or commissioning activity associated with the Protection System is complete, the "on-site" Misoperation exclusion no longer applies, regardless of the presence of on-site personnel.

Special Cases

Protection System operations for these cases would not be a Misoperation.

> **Example 7a:** A generator Protection System operation prior to closing the unit breaker(s) is not a Misoperation provided no in-service Elements are tripped.

This type of operation is not a Misoperation because the generating unit is not synchronized and is isolated from the BES. Protection System operations that occur when the protected Element is out of service and that do not trip any in-service Elements are not Misoperations.

In some cases where zones of protection overlap, the owner(s) of Elements may decide to allow a Protection System to operate faster in order to gain better overall Protection System performance for an Element.

> **Example 7b:** The high-side of a transformer connected to a line may be within the zone of protection of the supplying line's relaying. In this case, the line relaying is planned to protect the area of the high-side of the transformer and into its primary winding. In order to provide faster protection for the line, the line relaying may be designed and set to operate without direct coordination (or coordination is waived) with local protection for Faults on the high-side of the connected transformer. Therefore, the operation of the line relaying for a high-side transformer Fault operated as intended and would not be a Misoperation.

Below are examples of conditions that would be a Misoperation.

> **Example7c:** A 230 kV shunt capacitor bank was released for operational service. The capacitor bank trips due to a settings error in the capacitor bank differential relay upon energization.
>
> **Example 7d:** A 230/115 kV BES transformer bank trips out when being re-energized due to an incorrect operation of the transformer differential relay for inrush after being released for operational service. Only the high-side breaker opens since the low-side breaker had not yet been closed.

Non-Protective Functions

BES interrupting device operations which are initiated by non-protective functions, such as those associated with generator controls, excitation controls, or turbine/boiler controls, static voltampere-reactive compensators (SVC), flexible ac transmission systems (FACTS), high-voltage dc (HVdc) transmission systems, circuit breaker mechanisms, or other facility control systems are not operations of a Protection System. The standard is not applicable to non-protective functions such as automation (e.g., data collection) or control functions that are embedded within a Protection System.

Control Functions

The entity must make a determination as to whether the standard is applicable to each operation of its Protection System in accordance with the provided exclusions in the standard's Applicability, see Section 4.2.1. The subject matter experts (SME) developing this standard recognize that entities use Protection Systems as part of a routine practice to control BES Elements. This standard is not applicable to operation of protective functions within a Protection System when intended for controlling a BES Element as a part of an entity's process or planned switching sequence. The following are examples of conditions to which this standard is not applicable:

> **Example 8a:** The reverse power protective function that operates to remove a generating unit from service using the entity's normal or routine process.
>
> **Example 8b:** The reverse power relay enables a permissive trip and the generator operator trips the unit.

The standard is not applicable to operation of the protective relay because its operation is intended as a control function as part of a controlled shutdown sequence for the generator. However, the standard remains applicable to operation of the reverse power relay when it operates for conditions not associated with the controlled shutdown sequence, such as a motoring condition caused by a trip of the prime mover.

The following is another example of a condition to which this standard is not applicable:

> **Example 8c:** Operation of a capacitor bank interrupting device for voltage control using functions embedded within a microprocessor based relay that is part of a Protection System.

The above are examples only, and do not constitute an all-inclusive list to which the standard is not applicable.

Extenuating Circumstances

In the event of a natural disaster or other extenuating circumstances, the December 20, 2012 Sanction Guidelines of the North American Electric Reliability Corporation, Section 2.8, Extenuating Circumstances, reads: "In unique extenuating circumstances causing or contributing to the violation, such as significant natural disasters, NERC or the Regional Entity may significantly reduce or eliminate Penalties." The Regional Entities to whom NERC has delegated

authority will consider extenuating circumstances when considering any sanctions in relation to the timelines outlined in this standard.

The volume of Protection System operations tend to be sporadic. If a high rate of Protection System operations is not sustained, utilities will have an opportunity to catch up within the 120 day period.

Requirement Time Periods

The time periods within all the Requirements are distinct and separate. The applicable entity in Requirement R1 has 120 calendar days to identify whether a BES interrupting device operation is a Misoperation. Once the applicable entity has identified a Misoperation, it has completed its performance under Requirement R1. Identified Misoperations without an identified cause become subject to Requirement R4 and any subsequent Requirements as necessary. Identified Misoperations with an identified cause become subject to Requirement R5 and any subsequent Requirements as necessary.

In Requirement R2, the applicable entity has 120 calendar days, based on the date of the BES interrupting device operation, to provide notification to the other Protection System owners that meet the circumstances in Parts 2.1 and 2.2. For the case of an applicable entity that was notified (R3), it has the later of 120 calendar days from the date of the BES interrupting device operation or 60 calendar days of notification to identify whether its Protection System components caused a Misoperation.

Once a Misoperation is identified in either Requirement R1 or R3, and the applicable entity did not identify the cause(s) of the Misoperation, the time period for performing at least one investigative action every two full calendar quarters begins. The time period(s) in Requirement R4 resets upon each period. When the applicable entity's investigative actions identify the cause of the identified Misoperation or the applicable entity declares that no cause was found, the applicable entity has completed its performance in Requirement R4.

The time period in Requirement R5 begins when the Misoperation cause is first identified. The applicable entity is allotted 60 calendar days to perform one of the two activities listed in Requirement R5 (e.g., CAP or declaration) to complete its performance under Requirement R5.

Requirement R6 time period is determined by the actions and the associated timetable to complete those actions identified in the CAP. The time periods contained in the CAP may change from time to time and the applicable entity is required to update the timetable when it changes.

Time periods provided in the Requirements are intended to provide a reasonable amount of time to perform each Requirement. Performing activities in the least amount of time facilitates prompt identification of Misoperations, notification to other Protection System owners, identification of the cause(s), correction of the cause(s), and that important information is retained that may be lost due to time.

Requirement R1

This Requirement initiates a review of each BES interrupting device operation to identify whether or not a Misoperation may have occurred. Since the BES interrupting device owner typically monitors and tracks device operations, the owner is the logical starting point for identifying Misoperations of Protection Systems for BES Elements. A review is required when (1) a BES interrupting device operates that is caused by a Protection System or by manual intervention in response to a Protection System failure to operate, (2) regardless of whether the owner owns all or part of the Protection System component(s), and (3) the owner identified its Protection System component(s) as causing the BES interrupting device operation or was caused by manual intervention in response to its Protection System failure to operate.

Since most Misoperations result in the operation of one or more BES interrupting devices, these operations initiate a review to identify any Misoperation. If an Element is manually isolated in response to a failure to operate, the manual isolation of the Element triggers a review for Misoperation.

> **Example R1a:** The failure of a loss of field relay on a generating unit where an operator takes action to isolate the unit.

Manual intervention may indicate a Misoperation has occurred, thus requiring the initiation of an investigation by the BES interrupting device owner.

For the case where a BES interrupting device did not operate and remote clearing occurs due to the failure of a Composite Protection System to operate, the BES interrupting device owner would still review the operation under Requirement R1. However, if the BES interrupting device owner determines that its Protection System component operated as backup protection for a condition on another entity's BES Element, the owner would provide notification of the operation to the other Protection System owner(s) under Requirement R2, Part 2.2.

Protection Systems are made of many components. These components may be owned by different entities. For example, a Generator Owner may own a current transformer that sends information to a Transmission Owner's differential relay. All of these components and many more are part of a Protection System. It is expected that all of the owners will communicate with each other, sharing information freely, so that Protection System operations can be analyzed, Misoperations identified, and corrective actions taken.

Each entity is expected to use judgment to identify those Protection System operations that meet the definition of Misoperation regardless of the level of ownership. A combination of available information from resources such as counters, relay targets, Supervisory Control and Data Acquisition (SCADA) systems, or DME would typically be used to determine whether or not a Misoperation occurred. The intent of the standard is to classify an operation as a Misoperation if the available information leads to that conclusion. In many cases, it will not be necessary to leverage all available data to determine whether or not a Misoperation occurred. The standard also allows an entity to classify an operation as a Misoperation if entity is not sure. The entity may decide to identify the operation as a Misoperation to satisfy Requirement R1 and continue its investigation for a cause of the Misoperation under Requirement R4. If the continued investigative actions are inconclusive, the entity may declare no cause found and end its investigation. The entity is allotted 120 calendar days from the date of its BES interrupting device operation to identify whether its Protection System component(s) caused a Misoperation.

The Protection System operation may be documented in a variety of ways such as in a report, database, spreadsheet, or list. The documentation may be organized in a variety of ways such as by BES interrupting device, protected Element, or Composite Protection System.

Repeated operations which occur during the same automatic reclosing sequence do not need a separate identification under Requirement R1. Repeated Misoperations which occur during the same 24-hour period do not need a separate identification under Requirement R1. This is consistent with the NERC *Misoperations Report*[8] which states:

> "In order to avoid skewing the data with these repeated events, the NERC SPCS should clarify, in the next annual update of the misoperation template, that all misoperations due to the same equipment and cause within a 24 hour period be recorded as one misoperation."

The following is an example of a condition that is not a Misoperation.

> **Example R1b:** A high impedance Fault occurs within a transformer. The sudden pressure relaying detects and operates for the Fault, but the differential relaying did not operate due to the low Fault current levels. This is not a Misoperation because the Composite Protection System was not required to operate because the Fault was cleared by the sudden pressure relay.

Requirement R2

Requirement R2 ensures notification of those who have a role in identifying Misoperations, but were not accounted for within Requirement R1. In the case of multi-entity ownership, the entity that owns the BES interrupting device that operated is expected to use judgment to identify those Protection System operations that meet the definition of Misoperation under Requirement R1; however, if the entity that owns a BES interrupting device determines that its Protection System component(s) did not cause the BES interrupting device(s) operation or cannot determine whether its Protection System components caused the BES interrupting device(s) operation, it must notify the other Protection System owner(s) that share Misoperation identification responsibility when the criteria in Requirement R2 is met.

This Requirement does not preclude the Protection System owners from initially communicating and working together to determine whether a Misoperation occurred and, if so, the cause. The BES interrupting device owner is only required to officially notify the other owners when it: (1) shares the Composite Protection System ownership with other entity(ies), (2) determines that a Misoperation occurred or cannot rule out a Misoperation, and (3) determines its Protection System component(s) did not cause a Misoperation or is unsure. Officially notifying the other owners without performing a preliminary review may unnecessarily burden the other owners with compliance obligations under Requirement R3, redirect valuable resources, and add little benefit to reliability. The BES interrupting device owner should officially notify other owners when appropriate within the established time period.

[8] "Misoperations Report." Reporting Multiple Occurrences. NERC Protection System Misoperations Task Force. http://www.nerc.com/docs/pc/psmtf/PSMTF_Report.pdf. April 1, 2013. pg. 37 of 40.

The following is an example of a notification to another Protection System owner:

> **Example R2a:** Circuit breakers A and B at the Charlie station tripped from directional comparison blocking (DCB) relaying on 03/03/2014 at 15:43 UTC during an external Fault. As discussed last week, the fault records indicate that a problem with your equipment (failure to transmit) caused the operation.
>
> **Example R2b:** A generator unit tripped out immediately upon synchronizing to the grid due to a Misoperation of its overcurrent protection. The Transmission Owner owns the 230 kV generator breaker that operated. The Transmission Owner, as the owner of the BES interrupting device after determining that its Protection System components did not cause the Misoperation, notified the Generator Owner of the operation. The Generator Owner investigated and determined that its Protection System components caused the Misoperation. In this example, the Generator Owner's Protection System components did cause the Misoperation. As the owner of the Protection System components that caused the Misoperation, the Generator Owner is responsible for creating and implementing the CAP.

A Composite Protection System owned by different functional entities within the same registered entity does not necessarily satisfy the notification criteria in Part 2.1.1 of Requirement R2. For example, if the same personnel within a registered entity perform the Misoperation identification for both the Generator Owner and Transmission Owner functions, then the Misoperation identification would be completely covered in Requirement R1, and therefore notification would not be required. However, if the Misoperation identification is handled by different groups, then notification would be required because the Misoperation identification would not necessarily be covered in Requirement R1.

> **Example R2c:** Line A Composite Protection System (owned by entity 1) failed to operate for an internal Fault. As a result, the zone 3 portion of Line B's Composite Protection System (owned by entity 2) and zone 3 portion of Line C's Composite Protection System (owned by entity 3) operated to clear the Fault. Entity 2 and 3 notified entity 1 of the remote zone 3 operation.

For the case where a BES interrupting device operates to provide backup protection for a non-BES Element, the entity reviewing the operation is not required to notify the other owners of Protection Systems for non-BES Elements. No notification is required because this Reliability Standard is not applicable to Protection Systems for non-BES Elements.

Requirement R3

For Requirement R3 (i.e., notification received), the entity that also owns a portion of the Composite Protection System is expected to use judgment to identify whether the Protection System operation is a Misoperation. A combination of available information from resources such as counters, relay targets, SCADA, DME, and information from the other owner(s) would typically be used to determine whether or not a Misoperation occurred. The intent of the standard is to classify an operation as a Misoperation if the available information leads to that conclusion. In many cases, it will not be necessary to leverage all available data to determine whether or not a Misoperation occurred. The standard also allows an entity to classify an operation as a Misoperation if an entity is not sure. The entity may decide to identify the operation as a

Misoperation to satisfy Requirement R1 and continue its investigation for a cause of the Misoperation under Requirement R4. If the continued investigative actions are inconclusive, the entity may declare no cause found and end its investigation.

The entity that is notified by the BES interrupting device owner is allotted the later of 60 calendar days from receipt of notification or 120 calendar days from the BES interrupting device operation date to determine if its portion of the Composite Protection System caused the Protection System operation. It is expected that in most cases of a jointly owned Protection System, the entity making notification would have been in communication with the other owner(s) early in the process. This means that the shorter 60 calendar days only comes into play if the notification occurs in the second half of the 120 calendar days allotted to the BES interrupting device owner in Requirement R1.

The Protection System review may be organized in a variety of ways such as in a report, database, spreadsheet, or list. The documentation may be organized in a variety of ways such as by BES interrupting device, protected Element, or Composite Protection System. The BES interrupting device owner's notification received may be documented in a variety of ways such as an email or a facsimile.

Requirement R4

The entity in Requirement R4 (i.e., cause identification), whether it is the entity that owns the BES interrupting device or an entity that was notified, is expected to use due diligence in taking investigative action(s) to determine the cause(s) of an identified Misoperation for its portion of the Composite Protection System. The SMEs developing this standard recognize there will be cases where the cause(s) of a Misoperation will not be revealed during the allotted time periods in Requirements R1 or R3; therefore, Requirement R4 provides the entity a mechanism to continue its investigative work to determine the cause(s) of the Misoperation when the cause is not known.

A combination of available information from resources such as counters, relay targets, SCADA, DME, test results, and studies would typically be used to determine the cause of the Misoperation. At least one investigative action must be performed every two full calendar quarters until the investigation is completed.

The following is an example of investigative actions taken to determine the cause of an identified Misoperation:

> **Example R4a**: A Misoperation was identified on 03/18/2014. A line outage to test the Protection System was scheduled on 03/24/2014 for 12/15/2014 as the first investigative action (i.e., beyond the next two full calendar quarters) due to summer peak conditions. The protection engineer contacted the manufacturer on 04/10/2014 (i.e., within two full calendar quarters) to obtain any known issues. The engineer reviewed manufacturer's documents on 05/27/2014. The outage schedule was confirmed on 08/29/2014 and was taken on 12/15/2014. Testing was completed on 12/16/2014 (i.e., in the second two full quarters) revealing the microprocessor relay as the cause of the Misoperation. A CAP is being developed to replace the relay.

Periodic action minimizes compliance burdens and focuses the entity's effort on determining the cause(s) of the Misoperation while providing measurable evidence. The SMEs recognize that

certain planned investigative actions may require months or years to schedule and complete; therefore, the entity is only required to perform at least one investigative action every two full calendar quarters. If an investigative action is performed in the first quarter of a calendar year, the next investigative action would need to be performed by the end of the third calendar quarter. If an investigative action is performed in the last quarter of a calendar year, the next investigative action would need to be performed by the end of the second calendar quarter of the following calendar year. Investigative actions may include a variety of actions, such as reviewing DME records, performing or reviewing studies, completing relay calibration or testing, requesting manufacturer review, requesting an outage, or confirming a schedule.

The entity's investigation is complete when it identifies the cause of the Misoperation or makes a declaration that no cause was determined. The declaration is intended to be used if the entity determines that investigative actions have been exhausted or have not provided direction for identifying the Misoperation cause. Historically, approximately 12% of Misoperations are unknown or unexplainable.[9]

Although the entity only has to document its specific investigative actions taken to determine the cause(s) of an identified Misoperation, the entity should consider the benefits of formally organizing (e.g., in a report or database) its actions and findings. Well documented investigative actions and findings may be helpful in future investigations of a similar event or circumstances. A thorough report or database may contain a detailed description of the event, information gathered, investigative actions, findings, possible causes, identified causes, and conclusions. Multiple owners of a Composite Protection System might consider working together to produce a common report for their mutual benefit.

The following are examples of a declaration where no cause was determined:

> **Example R4b**: A Misoperation was identified on 04/11/2014. All relays at station A and B functioned properly during testing on 08/26/2014 as the first investigative action. The carrier system functioned properly during testing on 08/27/2014. The carrier coupling equipment functioned properly during testing on 08/28/2014. A settings review completed on 09/03/2014 indicated the relay settings were proper. Since the equipment involved in the operation functioned properly during testing, the settings were reviewed and found to be correct, and the equipment at station A and station B is already monitored. The investigation is being closed because no cause was found.
>
> **Example R4c:** A Misoperation was identified on 03/22/2014. The protection scheme was replaced before the cause was identified. The power line carrier or PLC based protection was replaced with fiber-optic based protection with an in-service date of 04/16/2014. The new system will be monitored for recurrence of the Misoperation.

Requirement R5

Resolving the causes of Protection System Misoperations benefits BES reliability by preventing recurrence. The Corrective Action Plan (CAP) is an established tool for resolving operational problems. The NERC Glossary defines a Corrective Action Plan as, *"A list of actions and an*

[9] NERC System Protection and Control Subcommittee. Misoperations Report. April 1, 2013: http://www.nerc.com/docs/pc/psmtf/PSMTF_Report.pdf. Figure 15: NERC Wide Misoperations by Cause Code. pg. 22 of 40.

associated timetable for implementation to remedy a specific problem." Since a CAP addresses specific problems, the determination of what went wrong needs to be completed before developing a CAP. When the Misoperation cause is identified in Requirement R1, R3 or R4, Requirement R5 requires Protection System owner(s) to develop a CAP, or explain why corrective actions are beyond the entity's control or would not improve BES reliability. The entity must develop the CAP or make a declaration why additional actions are beyond the entity's control or would not improve BES reliability and that no further corrective actions will be taken within 60 calendar days of first determining a cause.

The SMEs developing this standard recognize there may be multiple causes for a Misoperation. In these circumstances, the CAP would include a remedy for the identified causes. The CAP may be revised if additional causes are found; therefore, the entity has the option to create a single or multiple CAP(s) to correct multiple causes of a Misoperation. The 60 calendar day period for developing a CAP (or declaration) is established on the basis of industry experience which includes operational coordination timeframes, time to consider alternative solutions, coordination of resources, and development of a schedule.

The development of a CAP is intended to document the specific corrective actions needed to be taken to prevent Misoperation recurrence, the timetable for executing such actions, and an evaluation of the CAP's applicability to the entity's other Protection Systems including other locations. The evaluation of these other Protection Systems aims to reduce the risk and likelihood of similar Misoperations in other Protection Systems. The Protection System owner is responsible for determining the extent of its evaluation concerning other Protection Systems and locations. The evaluation may result in the owner including actions to address Protection Systems at other locations or the reasoning for not taking any action. The CAP and an evaluation of other Protection Systems including other locations must be developed to complete Requirement R5.

The following is an example of a CAP for a relay Misoperation that was applying a standing trip due to a failed capacitor within the relay and the evaluation of the cause at similar locations which determined capacitor replacement was not necessary.

For completion of each CAP in Examples R5a through R5d, please see Examples R6a through R6d.

> **Example R5a:** Actions: Remove the relay from service. Replace capacitor in the relay. Test the relay. Return to service or replace by 07/01/2014.
>
> Applicability to other Protection Systems: This type of impedance relay has not been experiencing problems and is systematically being replaced with microprocessor relays as Protection Systems are modernized. Therefore, it was assessed that a program for wholesale preemptive replacement of capacitors in this type of impedance relay does not need to be established for the system.

The following is an example of a CAP for a relay Misoperation that was applying a standing trip due to a failed capacitor within the relay and the evaluation of the cause at similar locations which determined the capacitors need preemptive correction action.

> **Example R5b:** Actions: Remove the relay from service. Replace capacitor in the relay. Test the relay. Return to service or replace by 07/01/2014.
>
> Applicability to other Protection Systems: This type of impedance relay is suspected to have previously tripped at other locations because of the same type of capacitor issue. Based on the evaluation, a program should be established by 12/01/2014 for wholesale preemptive replacement of capacitors in this type of impedance relay.

The following is an example of a CAP for a relay Misoperation that was applying a standing trip due to a failed capacitor within the relay and the evaluation of the cause at similar locations which determined the capacitors need preemptive correction action.

> **Example R5c:** Actions: Remove the relay from service. Replace capacitor in the relay. Test the relay. Return to service or replace by 07/01/2014.
>
> Applicability to other Protection Systems: This type of impedance relay is suspected to have previously tripped at other locations because of the same type of capacitor issue. Based on the evaluation, the preemptive replacement of capacitors in this type of impedance relay should be pursued for the identified stations A through I by 04/30/2015.
>
> A plan is being developed to replace the impedance relay capacitors at stations A, B, and C by 09/01/2014. A second plan is being developed to replace the impedance relay capacitors at stations D, E, and F by 11/01/2014. The last plan will replace the impedance relay capacitors at stations G, H, and I by 02/01/2015.

The following is an example of a CAP for a relay Misoperation that was due to a version 2 firmware problem and the evaluation of the cause at similar locations which determined the firmware needs preemptive correction action.

> **Example R5d:** Actions: Provide the manufacturer fault records. Install new firmware pending manufacturer results by 10/01/2014.
>
> Applicability to other Protection Systems: Based on the evaluation of other locations and a risk assessment, the newer firmware version 3 should be installed at all installations that are identified to be version 2. Twelve relays were identified across the system. Proposed completion date is 12/31/2014.

The following are examples of a declaration made where corrective actions are beyond the entity's control or would not improve BES reliability and that no further corrective actions will be taken.

> **Example R5e:** The cause of the Misoperation was due to a non-registered entity communications provider problem.
>
> **Example R5f:** The cause of the Misoperation was due to a transmission transformer tapped industrial customer who initiated a direct transfer trip to a registered entity's transmission breaker.

In situations where a Misoperation cause emanates from a non-registered outside entity, there may be limited influence an entity can exert on an outside entity and is considered outside of an entity's control.

The following are examples of declarations made why corrective actions would not improve BES reliability.

> **Example R5g:** The investigation showed that the Misoperation occurred due to transients associated with energizing transformer ABC at Station Y. Studies show that de-sensitizing the relay to the recorded transients may cause the relay to fail to operate as intended during power system oscillations.
>
> **Example R5h:** As a result of an operation that left a portion of the power system in an electrical island condition, circuit XYZ within that island tripped, resulting in loss of load within the island. Subsequent investigation showed an overfrequency condition persisted after the formation of that island and the XYZ line protective relay operated. Since this relay was operating outside of its designed frequency range and would not be subject to this condition when line XYZ is operated normally connected to the BES, no corrective action will be taken because BES reliability would not be improved.
>
> **Example R5i:** During a major ice storm, four of six circuits were lost at Station A. Subsequent to the loss of these circuits, a skywire (i.e., shield wire) broke near station A on line AB (between Station A and B) resulting in a phase-phase Fault. The protection scheme utilized for both protection groups is a permissive overreaching transfer trip (POTT). The Line AB protection at Station B tripped timed for this event (i.e., Slow Trip – During Fault) even though this line had been identified as requiring high speed clearing. A weak infeed condition was created at Station A due to the loss of 4 transmission circuits resulting in the absence of a permissive signal on Line AB from Station A during this Fault. No corrective action will be taken for this Misoperation as even under N-1 conditions, there is normally enough infeed at Station A to send a proper permissive signal to station B. Any changes to the protection scheme to account for this would not improve BES reliability.

A declaration why corrective actions are beyond the entity's control or would not improve BES reliability should include the Misoperation cause and the justification for taking no corrective action. Furthermore, a declaration that no further corrective actions will be taken is expected to be used sparingly.

Requirement R6

To achieve the stated purpose of this standard, which is to identify and correct the causes of Misoperations of Protection Systems for BES Elements, the responsible entity is required to implement a CAP that addresses the specific problem (i.e., cause(s) of the Misoperation) through completion. Protection System owners are required in the implementation of a CAP to update it when actions or timetable change, until completed. Accomplishing this objective is intended to reduce the occurrence of future Misoperations of a similar nature, thereby improving reliability and minimizing risk to the BES.

The following is an example of a completed CAP for a relay Misoperation that was applying a standing trip (See also, Example R5a).

> **Example R6a:** Actions: The impedance relay was removed from service on 06/02/2014 because it was applying a standing trip. A failed capacitor was found within the impedance relay and replaced. The impedance relay functioned properly during testing after the capacitor was replaced. The impedance relay was returned to service on 06/05/2014.
>
> CAP completed on 06/25/2014.

The following is an example of a completed CAP for a relay Misoperation that was applying a standing trip that resulted in the correction and the establishment of a program for further replacements (See also, Example R5b).

> **Example R6b:** Actions: The impedance relay was removed from service on 06/02/2014 because it was applying a standing trip. A failed capacitor was found within the impedance relay and replaced. The impedance relay functioned properly during testing after the capacitor was replaced. The impedance relay was returned to service on 06/05/2014.
>
> A program for wholesale preemptive replacement of capacitors in this type of impedance relay was established on 10/28/2014.
>
> CAP completed on 10/28/2014.

The following is an example of a completed CAP of corrective actions with a timetable that required updating for a failed relay and preemptive actions for similar installations (See also, Example R5c).

> **Example R6c:** Actions: The impedance relay was removed from service on 06/02/2014 because it was applying a standing trip. A failed capacitor was found within the impedance relay and replaced. The impedance relay functioned properly during testing after the capacitor was replaced. The impedance relay was returned to service on 06/05/2014.
>
> The impedance relay capacitor replacement was completed at stations A, B, and C on 08/16/2014. The impedance relay capacitor replacement was completed at stations D, E, and F on 10/24/2014. The impedance relay capacitor replacement for stations G, H, and I were postponed due to resource rescheduling from a scheduled 02/01/15 completion to 04/01/2015 completion. Capacitor replacement was completed on 03/09/2015 at stations G, H, and I. All stations identified in the evaluation have been completed.
>
> CAP completed on 03/09/2015.

The following is an example of a completed CAP for corrective actions with updated actions for a firmware problem and preemptive actions for similar installations. (See also, Example R5d).

> **Example R6d:** Actions: fault records were provided to the manufacturer on 06/04/2014. The manufacturer responded that the Misoperation was caused by a bug in version 2 firmware, and recommended installing version 3 firmware. Version 3 firmware was installed on 08/12/2014.
>
> Nine of the twelve relays were updated to version 3 firmware on 09/23/2014. The manufacturer provided a subsequent update which was determined to be beneficial for the remaining relays. The remaining three of twelve relays identified as having the version 2 firmware were updated to version 3.01 firmware on 11/10/2014.
>
> CAP completed on 11/10/2014.

The CAP is complete when all of the actions identified within the CAP have been completed.

Process Flow Chart: Below is a graphical representation demonstrating the relationships between Requirements:

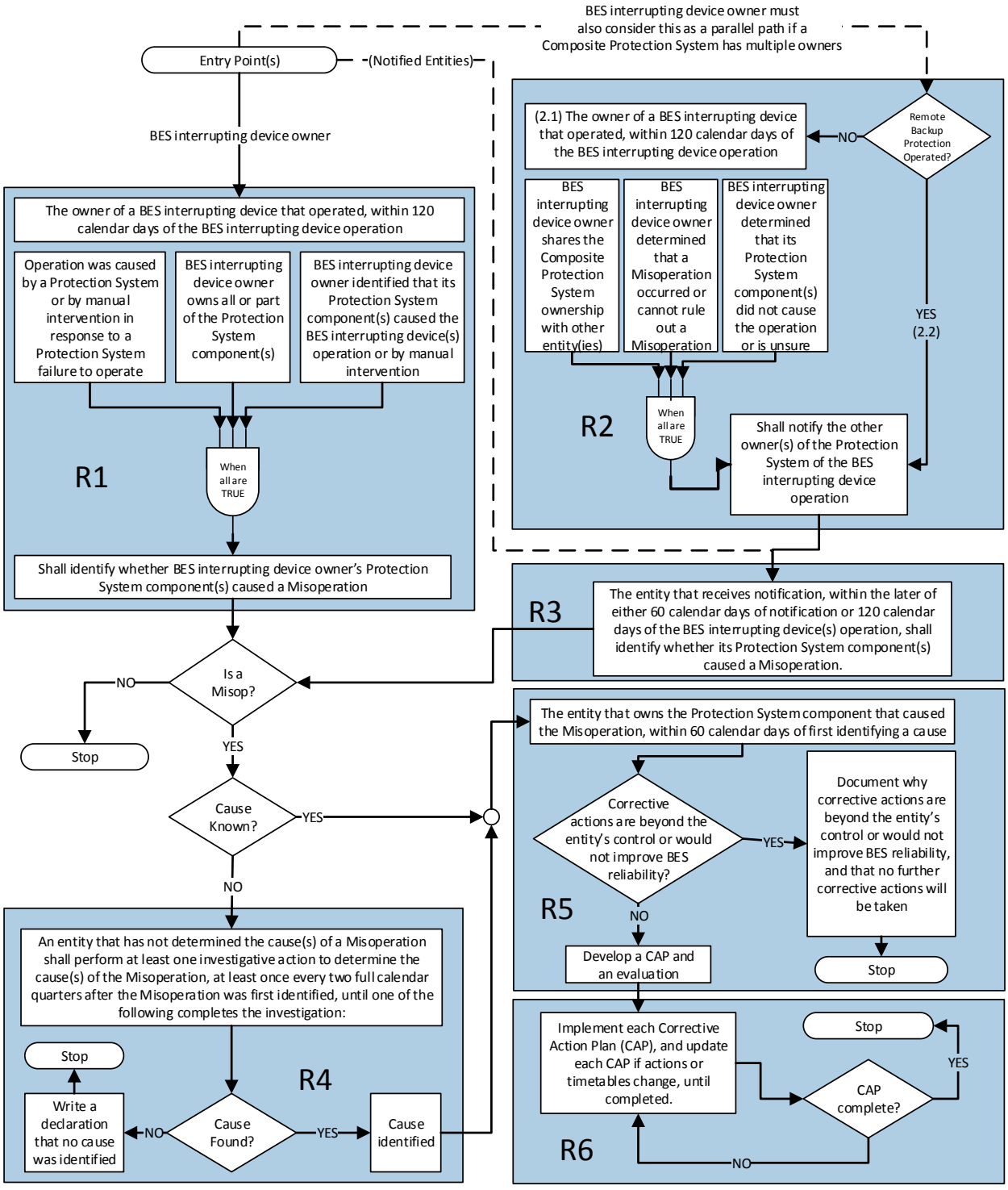

Rationale:

During development of this standard, text boxes were embedded within the standard to explain the rationale for various parts of the standard. Upon BOT approval, the text from the rationale text boxes was moved to this section.

Rationale for Introduction:

The only revisions made to this version of PRC-004-4 are revisions to section 4.2 Facilities to clarify applicability of the Requirements of the standard at generator Facilities. These applicability revisions are intended to clarify and provide for consistent application of the Requirements to BES generator Facilities included in the BES through Inclusion I4 – Dispersed Power Producing Resources.

The DGR version of this standard had been labeled PRC-004-4 for balloting purposes. The 'X' had indicated that a version number would be applied at a later time, because multiple versions of PRC-004 were in development at the time of the previous posting. The 'X' designation reflected the fact that applicability changes need to apply to versions of the standard that are approved (PRC-004-2.1a) and in development in Project 2010-05.1. However, PRC-004-3 was approved by the NERC Board of Trustees on August 14, 2014, so this version has been designated PRC-004-4 to indicate that this version is the successor version.

Rationale for Applicability:

Misoperations occurring on the Protection Systems of individual generation resources identified under Inclusion I4 of the BES definition do not have a material impact on BES reliability when considered individually; however, the aggregate capability of these resources may impact BES reliability if a number of Protection Systems on the individual power producing resources incorrectly operated or failed to operate as designed during a system event. To recognize the potential for the Protection Systems of individual power producing resources to affect the reliability of the BES, 4.2.1.5 of the Facilities section reflects the threshold consistent with the revised BES definition. See FERC Order Approving Revised Definition, P 20, Docket No. RD14-2-000. The intent of 4.2.1.5 of the Facilities section is to exclude from the standard requirements these Protection Systems for "common- mode failure" type scenarios affecting less than or equal to 75 MVA aggregated nameplate generating capability at these dispersed generating facilities.

NERC
NORTH AMERICAN ELECTRIC RELIABILITY CORPORATION

Implementation Plan

PRC-004-5 – Protection System Misoperation Identification and Correction

Project 2008-02.2 – Phase 2 UVLS: Misoperations

Requested Approvals

- PRC-004-5 – Protection System Misoperation Identification and Correction

Requested Retirements

- PRC-004-4 – Protection System Misoperation Identification and Correction[1]

Prerequisite Approvals

- PRC-010-2 – Undervoltage Load Shedding

General Considerations

The implementation period is intended to align with the Effective Date of PRC-010-1 or occurring soon thereafter in order to incorporate certain aspects of PRC-022-1 – Under-Voltage Load Shedding Program Performance into PRC-004-5. The standard PRC-022-1 was retired by PRC-010-1. The Implementation Plan for PRC-010-1[2] allows twelve (12) calendar months after applicable approvals. Version two of PRC-010 is including undervoltage load shedding (UVLS) that is included in a UVLS Program.

Applicable Entities

- Transmission Owner
- Generator Owner
- Distribution Provider

[1] PRC-004-4 was adopted by the NERC Board of Trustees on November 13, 2014. PRC-004-4 is pending adoption or approval by applicable governmental authorities. PRC-004-5 will retire PRC-004-3 if PRC-004-4 is not adopted or approved by an applicable governmental authority.

[2] Refer to Project 2008-02.2 on the NERC website. (http://www.nerc.com/pa/Stand/Pages/Project-2008-02_2-Phase-2-Undervoltage-Load-Shedding-UVLS-Misoperations.aspx)

Effective Dates

PRC-004-5 shall become effective on the later of the first day following the Effective Date of PRC-010-1 or the first day of the first calendar quarter after the standard is approved by an applicable governmental authority or as otherwise provided for in a jurisdiction where approval by an applicable governmental authority is required for a standard to go into effect. Where approval by an applicable governmental authority is not required, the standard shall become effective on the later of the first day following the Effective Date of PRC-010-1 or the first day of the first calendar quarter after the date the standard is adopted by the NERC Board of Trustees or as otherwise provided for in that jurisdiction.

NERC
NORTH AMERICAN ELECTRIC RELIABILITY CORPORATION

Implementation Plan

PRC-004-5 – Protection System Misoperation Identification and Correction

Project 2008-02.2 – Phase 2 UVLS: Misoperations

Requested Approvals

- PRC-004-5 – Protection System Misoperation Identification and Correction

Requested Retirements

- PRC-004-4 – Protection System Misoperation Identification and Correction[1]

Prerequisite Approvals

- PRC-010-2 – Undervoltage Load Shedding

General Considerations

The implementation period is intended to align with the Effective Date of PRC-010-1 or occurring soon thereafter in order to incorporate certain aspects of PRC-022-1 – Under-Voltage Load Shedding Program Performance into PRC-004-5. The standard PRC-022-1 was retired by PRC-010-1. The Implementation Plan for PRC-010-1[2] allows twelve (12) calendar months after applicable approvals. Version two of PRC-010 is including undervoltage load shedding (UVLS) that is included in a UVLS Program.

Applicable Entities

- Transmission Owner
- Generator Owner
- Distribution Provider

[1] PRC-004-4 was adopted by the NERC Board of Trustees on November 13, 2014. PRC-004-4 is pending adoption or approval by applicable governmental authorities. PRC-004-5 will retire PRC-004-3 if PRC-004-4 is not adopted or approved by an applicable governmental authority.

[2] Refer to Project 2008-02.2 on the NERC website. (http://www.nerc.com/pa/Stand/Pages/Project-2008-02_2-Phase-2-Undervoltage-Load-Shedding-UVLS-Misoperations.aspx)

Effective Dates

PRC-004-5 shall become effective on the later of the first day following the Effective Date of PRC-010-1 or the first day of the first calendar quarter after the standard is approved by an applicable governmental authority or as otherwise provided for in a jurisdiction where approval by an applicable governmental authority is required for a standard to go into effect. Where approval by an applicable governmental authority is not required, the standard shall become effective on the later of the first day following the Effective Date of PRC-010-1 or the first day of the first calendar quarter after the date the standard is adopted by the NERC Board of Trustees or as otherwise provided for in that jurisdiction.

NERC
NORTH AMERICAN ELECTRIC RELIABILITY CORPORATION

Implementation Plan

PRC-004-5 – Protection System Misoperation Identification and Correction

Project 2008-02.2 – Phase 2 UVLS: Misoperations

Requested Approvals

- PRC-004-5 – Protection System Misoperation Identification and Correction

Requested Retirements

- PRC-004-4 – Protection System Misoperation Identification and Correction[1]

Prerequisite Approvals

- PRC-010-2 – Undervoltage Load Shedding

General Considerations

The implementation period is intended to align with the Effective Date of PRC-010-1 or occurring soon thereafter in order to incorporate certain aspects of PRC-022-1 – Under-Voltage Load Shedding Program Performance into PRC-004~~.~~ 5. The standard PRC-022-1 was retired by PRC-010-1. The Implementation Plan for PRC-010-1[2] allows twelve (12) calendar months after applicable approvals. Version ~~five~~two of PRC-~~004~~010 is including undervoltage load shedding (UVLS) that is ~~intended to trip one or more BES Elements~~included in a UVLS Program.

Applicable Entities

- Transmission Owner
- Generator Owner
- Distribution Provider

[1] PRC-004-4 was adopted by the NERC Board of Trustees on November 13, 2014. PRC-004-4 is pending adoption or approval by applicable governmental authorities. PRC-004-5 will retire PRC-004-3 if PRC-004-4 is not adopted or approved by an applicable governmental authority.

[2] Refer to Project 2008-02.2 on the NERC website. (http://www.nerc.com/pa/Stand/Pages/Project-2008-02_2-Phase-2-Undervoltage-Load-Shedding-UVLS-Misoperations.aspx)

Standard Development Timeline

This section is maintained by the drafting team during the development of the standard and will be removed when the standard becomes effective.

Development Steps Completed

1. The NERC Board of Trustees ("Board") adopted PRC-004-4 and PRC-010-1 and retired PRC-022-1 on November 13, 2014.
2. The NERC Standards Committee authorized the initial posting of the standard on February 18, 2015.
3. Draft 1 of PRC-010-2 was posted for a 45-day formal comment period from February 20 – April 7, 2015 and an initial ballot in the last ten days of the comment period from March 27 – April 7, 2015.

Description of Current Draft

The UVLSSDT is posting Draft 2 of PRC-010-2 – Undervoltage Load Shedding for a 10-day final ballot.

Anticipated Actions	Date
45-day formal comment period with ballot	February 2015
10-day final ballot	April 2015
Board adoption	May 2015

Project Development Background

The undervoltage load shedding (UVLS) standard drafting team (SDT) was tasked with addressing Misoperation of UVLS equipment during the development of version one of PRC-010 and version three of PRC-004 in Project 2010-05.1 (i.e., Misoperation). This project has been named phase 2 of Project 2008-02 (i.e., UVLS) for clarity purposes. Each SDT for these two projects outlined work necessary to address Misoperation of UVLS equipment. This work was deferred, at the time, because both PRC-010-1 and PRC-004-3 contained dependencies with other projects requiring their completion. This phase two is a continuation of the work performed under the Standards Authorization Request (SAR) for Project 2008-02.

The revisions proposed in Reliability Standard PRC-010-2 meet the following objectives:

- Address the UVLS Misoperation the remaining work due to the retirement of PRC-022-1 (Undervoltage Load Shedding Program Performance) during the development of PRC-010-1 (Undervoltage Load Shedding)

- Ensure the performance of the UVLS equipment (i.e., operation or non-operation) within the UVLS Program is assessed and, if necessary, mitigated

Basis for Revision

Originally, Misoperation of UVLS equipment was planned to be appended to a future version of PRC-004 (Protection System Misoperation Identification and Correction). The SDT is proposing a two-prong approach by revising both PRC-004 and PRC-010 to address the concern of identifying Misoperations of UVLS equipment in PRC-022-1.

First, the SDT proposes an addition to the Applicability section of PRC-004 to include UVLS that is intended to trip one or more Bulk Electric System (BES) Elements. This is consistent with previous communication to industry about addressing Misoperation of UVLS equipment.[1] Entities will be required to address UVLS that trips a BES Element similarly to other Protection Systems in PRC-004. While the revision to PRC-004 consistent with the communicated approach, the SDT determined that the proposed revision fails to address the performance (operation or non-operations) of UVLS Program equipment not covered by the strict processes of PRC-004.

Second, the SDT is proposing clarifying revisions in PRC-010-2, Requirements R4 and R5 to address UVLS Program equipment performance. These revisions are not requiring UVLS entities to address UVLS protective relays not covered by the strict processes of PRC-004; however, PRC-010-2 is requiring UVLS entities to address the deficiencies (e.g., Misoperations) identified in the assessment performed by Planning Coordinator or Transmission Planner in Requirement R4. Deficiencies include the performance (operation or non-operation) issues of UVLS Program equipment. These deficiencies, if any, are addressed by the UVLS entities through a Corrective Action Plan (CAP) developed in Requirement R5 and executed by the UVLS entities in Requirement R2 of PRC-010.

The term “Misoperation” as defined by the Glossary of Terms Used in NERC Reliability Standards is not used within the Requirements of PRC-010; however, the term is used in the Guidelines and Technical Basis section of the standard to provide clarity that UVLS Program equipment deficiencies include Misoperations that are to be corrected by UVLS entities. The PRC-010-2 Reliability Standard mandates that UVLS entities are to correct the deficiencies identified by the Planning Coordinator or Transmission Planner, such as Misoperation of UVLS equipment. Deficiencies are identified through either the periodic assessment or an assessment performed following an event and included in a CAP to the UVLS entity. The structure used by the SDT allows the Planning Coordinator and Transmission Planner to assess UVLS equipment for Misoperation under PRC-010 rather than the Generator Owner, Transmission Owner, and Distribution Provider applicable to the strict processes of PRC-004.

[1] Refer to Implementation Plan for PRC-010-1 (http://www.nerc.com/pa/stand/Pages/PRC0101RI.aspx) and PRC-010-1 (http://www.nerc.com/pa/Stand/Pages/ReliabilityStandards.aspx), Introduction in the Guidelines and Technical Basis, last paragraph.

The two-pronged approach ensures that any UVLS Program equipment containing a deficiency is identified and corrected under PRC-010 and UVLS that trips a BES Element is corrected under PRC-004 to address the requirements in the retired PRC-022-1.

When this standard receives Board adoption, the rationale boxes in the Supplemental Material section of the standard will remain. The rationale box for Requirement R4 will be removed.

A. Introduction

1. **Title:** Undervoltage Load Shedding
2. **Number:** PRC-010-2
3. **Purpose:** To establish an integrated and coordinated approach to the design, evaluation, and reliable operation of Undervoltage Load Shedding Programs (UVLS Programs).
4. **Applicability:**

   4.1. Functional Entities:

   4.1.1 Planning Coordinator.

   4.1.2 Transmission Planner.

   4.1.3 Undervoltage load shedding (UVLS) entities – Distribution Providers and Transmission Owners responsible for the ownership, operation, or control of UVLS equipment as required by the UVLS Program established by the Transmission Planner or Planning Coordinator.

5. **Effective Date:** See Project 2008-02.2 Implementation Plan.

B. Requirements and Measures

R1. Each Planning Coordinator or Transmission Planner that is developing a UVLS Program shall evaluate its effectiveness and subsequently provide the UVLS Program's specifications and implementation schedule to the UVLS entities responsible for implementing the UVLS Program. The evaluation shall include, but is not limited to, studies and analyses that show: *[Violation Risk Factor: High] [Time Horizon: Long-term Planning]*

1.1. The implementation of the UVLS Program resolves the identified undervoltage issues that led to its development and design.

1.2. The UVLS Program is integrated through coordination with generator voltage ride-through capabilities and other protection and control systems, including, but not limited to, transmission line protection, autoreclosing, Remedial Action Schemes, and other undervoltage-based load shedding programs.

M1. Acceptable evidence may include, but is not limited to, date-stamped studies and analyses, reports, or other documentation detailing the effectiveness of the UVLS Program, and date-stamped communications showing that the UVLS Program specifications and implementation schedule were provided to UVLS entities.

R2. Each UVLS entity shall adhere to the UVLS Program specifications and implementation schedule determined by its Planning Coordinator or Transmission Planner associated

with UVLS Program development per Requirement R1 or with any Corrective Action Plans per Requirement R5. *[Violation Risk Factor: High] [Time Horizon: Long-term Planning]*

M2. Acceptable evidence must include date-stamped documentation on the completion of actions and may include, but is not limited to, identifying the equipment armed with UVLS relays, the UVLS relay settings, associated Load summaries, work management program records, work orders, and maintenance records.

R3. Each Planning Coordinator or Transmission Planner shall perform a comprehensive assessment to evaluate the effectiveness of each of its UVLS Programs at least once every 60 calendar months. Each assessment shall include, but is not limited to, studies and analyses that evaluate whether: *[Violation Risk Factor: Medium] [Time Horizon: Long-term Planning]*

3.1. The UVLS Program resolves the identified undervoltage issues for which the UVLS Program is designed.

3.2. The UVLS Program is integrated through coordination with generator voltage ride-through capabilities and other protection and control systems, including, but not limited to, transmission line protection, autoreclosing, Remedial Action Schemes, and other undervoltage-based load shedding programs.

M3. Acceptable evidence may include, but is not limited to, date-stamped reports or other documentation detailing the assessment of the UVLS Program.

Rationale for Requirement R4: Refer to the Supplemental Section at the end of the document for the rationale.

R4. Each Planning Coordinator or Transmission Planner shall, within 12 calendar months of an event that resulted in a voltage excursion for which its UVLS Program was designed to operate, perform an assessment to evaluate: *[Violation Risk Factor: Medium] [Time Horizon: Operations Planning]*

4.1. Whether its UVLS Program resolved the undervoltage issues associated with the event, and

4.2. The performance (i.e., operation and non-operation) of the UVLS Program equipment.

M4. Acceptable evidence may include, but is not limited to, date-stamped event data, event analysis reports, or other documentation detailing the assessment of the UVLS Program and associated equipment.

R5. Each Planning Coordinator or Transmission Planner that identifies deficiencies during an assessment performed in either Requirement R3 or R4 shall develop a Corrective Action Plan to address the deficiencies and subsequently provide the Corrective Action Plan, including an implementation schedule, to UVLS entities within three

calendar months of completing the assessment. *[Violation Risk Factor: Medium] [Time Horizon: Operations Planning]*

M5. Acceptable evidence must include a date-stamped Corrective Action Plan that addresses identified deficiencies and may also include date-stamped reports or other documentation supporting the Corrective Action Plan. Evidence should also include date-stamped communications showing that the Corrective Action Plan and an associated implementation schedule were provided to UVLS entities.

R6. Each Planning Coordinator that has a UVLS Program in its area shall update a database containing data necessary to model the UVLS Program(s) in its area for use in event analyses and assessments of the UVLS Program at least once each calendar year. *[Violation Risk Factor: Lower] [Time Horizon: Operations Planning]*

M6. Acceptable evidence may include, but is not limited to, date-stamped spreadsheets, database reports, or other documentation demonstrating a UVLS Program database was updated.

R7. Each UVLS entity shall provide data to its Planning Coordinator according to the format and schedule specified by the Planning Coordinator to support maintenance of a UVLS Program database. *[Violation Risk Factor: Lower] [Time Horizon: Operations Planning]*

M7. Acceptable evidence may include, but is not limited to, date-stamped emails, letters, or other documentation demonstrating data was provided to the Planning Coordinator as specified.

R8. Each Planning Coordinator that has a UVLS Program in its area shall provide its UVLS Program database to other Planning Coordinators and Transmission Planners within its Interconnection, and other functional entities with a reliability need, within 30 calendar days of a written request. *[Violation Risk Factor: Lower] [Time Horizon: Operations Planning]*

M8. Acceptable evidence may include, but is not limited to, date-stamped emails, letters, or other documentation demonstrating that the UVLS Program database was provided within 30 calendar days of receipt of a written request.

C. Compliance

1. Compliance Monitoring Process

1.1. Compliance Enforcement Authority

As defined in the NERC Rules of Procedure, “Compliance Enforcement Authority” means NERC or the Regional Entity in their respective roles of monitoring and enforcing compliance with the NERC Reliability Standards.

1.2. Evidence Retention

The following evidence retention periods identify the period of time an entity is required to retain specific evidence to demonstrate compliance. For instances

where the evidence retention period specified below is shorter than the time since the last audit, the Compliance Enforcement Authority may ask an entity to provide other evidence to show that it was compliant for the full-time period since the last audit.

The Planning Coordinator, Transmission Planner, Distribution Provider, and Transmission Owner shall keep data or evidence to show compliance as identified below unless directed by its Compliance Enforcement Authority to retain specific evidence for a longer period of time as part of an investigation.

The applicable entity shall retain documentation as evidence for six calendar years.

If an applicable entity is found non-compliant, it shall keep information related to the non-compliance until mitigation is complete and approved, or for the time specified above, whichever is longer.

The Compliance Enforcement Authority shall keep the last audit records and all requested and submitted subsequent audit records.

1.3. Compliance Monitoring and Assessment Processes

"Compliance Monitoring and Assessment Processes" refers to the identification of the processes that will be used to evaluate data or information for the purpose of assessing performance or outcomes with the associated reliability standard.

1.4. Additional Compliance Information

None.

Table of Compliance Elements

R #	Time Horizon	VRF	Violation Severity Levels			
			Lower VSL	Moderate VSL	High VSL	Severe VSL
R1	Long-term Planning	High	N/A	N/A	N/A	The applicable entity that developed the UVLS Program failed to evaluate the program's effectiveness and subsequently provide the UVLS Program's specifications and implementation schedule to UVLS entities in accordance with Requirement R1, including the items specified in Parts 1.1 and 1.2.

R #	Time Horizon	VRF	Violation Severity Levels			
			Lower VSL	Moderate VSL	High VSL	Severe VSL
R2	Long-term Planning	High	N/A	N/A	The applicable entity failed to adhere to the UVLS Program specifications in accordance with Requirement R2. OR The applicable entity failed to adhere to the implementation schedule in accordance with Requirement R2.	The applicable entity failed to adhere to the UVLS Program specifications and implementation schedule in accordance with Requirement R2.
R3	Long-term Planning	Medium	N/A	N/A	N/A	The applicable entity failed to perform an assessment at least once during the 60 calendar months in accordance with Requirement R3, including the items specified in Parts 3.1 and 3.2.

R #	Time Horizon	VRF	Violation Severity Levels			
			Lower VSL	Moderate VSL	High VSL	Severe VSL
R4	Operations Planning	Medium	The applicable entity performed an assessment in accordance with Requirement R4 within a time period greater than 12 calendar months but less than or equal to 13 calendar months after an applicable event.	The applicable entity performed an assessment in accordance with Requirement R4 within a time period greater than 13 calendar months but less than or equal to 14 calendar months after an applicable event.	The applicable entity performed an assessment in accordance with Requirement R4 within a time period greater than 14 calendar months but less than or equal to 15 calendar months after an applicable event.	The applicable entity performed an assessment in accordance with Requirement R4 within a time period greater than 15 calendar months after an applicable event. OR The applicable entity failed to perform an assessment in accordance with Requirement R4.

R #	Time Horizon	VRF	Violation Severity Levels			
			Lower VSL	Moderate VSL	High VSL	Severe VSL
R5	Operations Planning	Medium	The applicable entity developed a Corrective Action Plan and provided it to UVLS entities in accordance with Requirement R5 but was late by less than or equal to 15 calendar days.	The applicable entity developed a Corrective Action Plan and provided it to UVLS entities in accordance with Requirement R5 but was late by more than 15 calendar days but less than or equal to 30 calendar days.	The applicable entity developed a Corrective Action Plan and provided it to UVLS entities in accordance with Requirement R5 but was late by more than 30 calendar days but less than or equal to 45 calendar days.	The applicable entity developed a Corrective Action Plan and provided it to UVLS entities in accordance with Requirement R5 but was late by more than 45 calendar days. OR The responsible entity failed to develop a Corrective Action Plan or provide it to UVLS entities in accordance with Requirement R5.

R #	Time Horizon	VRF	Violation Severity Levels			
			Lower VSL	Moderate VSL	High VSL	Severe VSL
R6	Operations Planning	Lower	The applicable entity updated the database in accordance with Requirement R6 but was late by less than or equal to 30 calendar days.	The applicable entity updated the database in accordance with Requirement R6 but was late by more than 30 calendar days but less than or equal to 60 calendar days.	The applicable entity updated the database in accordance with Requirement R6 but was late by more than 60 calendar days but less than or equal to 90 calendar days.	The applicable entity updated the database in accordance with Requirement R6 but was late by more than 90 calendar days. OR The applicable entity failed to update the database in accordance with Requirement R6.

R #	Time Horizon	VRF	Violation Severity Levels			
			Lower VSL	Moderate VSL	High VSL	Severe VSL
R7	Operations Planning	Lower	The applicable entity provided data in accordance with Requirement R7 but was late by less than or equal to 30 calendar days per the specified schedule. OR The applicable entity provided data in accordance with Requirement R7 but the data was not provided according to the specified format.	The applicable entity provided data in accordance with Requirement R7 but was late by more than 30 calendar days but less than or equal to 60 calendar days per the specified schedule.	The applicable entity provided data in accordance with Requirement R7 but was late by more than 60 calendar days but less than or equal to 90 calendar days per the specified schedule.	The applicable entity provided data in accordance with Requirement R7 but was late by more than 90 calendar days per the specified schedule. OR The applicable entity failed to provide data in accordance with Requirement R7.

R #	Time Horizon	VRF	Violation Severity Levels			
			Lower VSL	Moderate VSL	High VSL	Severe VSL
R8	Operations Planning	Lower	The applicable entity provided its UVLS Program database in accordance with Requirement R8 but was late by less than or equal to 15 calendar days.	The applicable entity provided its UVLS Program database in accordance with Requirement R8 but was late by more than 15 calendar days but less than or equal to 30 calendar days.	The applicable entity provided its UVLS Program database in accordance with Requirement R8 but was late by more than 30 calendar days but less than or equal to 45 calendar days.	The applicable entity provided its UVLS Program database in accordance with Requirement R8 but was late by more than 45 calendar days. OR The applicable entity failed to provide its UVLS Program database in accordance with Requirement R8.

D. Regional Variances

None.

E. Interpretations

None.

F. Associated Documents

None.

Version History

Version	Date	Action	Change Tracking
0	February 8, 2005	Adopted by NERC Board of Trustees	
0	April 1, 2005	Effective Date	
0	February 7, 2013	Adopted by NERC Board of Trustees	R2 and associated elements for retirement as part of the Paragraph 81 project (Project 2013-02) pending applicable regulatory approval.
1	November 13, 2014	Adopted by NERC Board of Trustees	Revisions made under Project 2008-02: Undervoltage Load Shedding (UVLS) & Underfrequency Load Shedding (UFLS) to address directive issued in FERC Order No. 763.
2		Adopted by NERC Board of Trustees	Revisions made under Project 2008-02.2: Undervoltage Load Shedding (UVLS): Misoperation to include UVLS equipment.

Guidelines and Technical Basis

Introduction

The standard drafting team provides the following discussion to support the approach to the standard. The information is meant to enhance the understanding of the reliability needs and deliverable expectations of each requirement, supported as necessary by technical principles and industry experience.

Guidelines for UVLS Program Definition

The definition for the term, “Undervoltage Load Shedding Program” or “UVLS Program” includes automatic load shedding programs that utilize only voltage inputs at locations where action is taken to shed load. As such, the failure of a single component is unlikely to affect the reliable operation of the program.

The UVLS Program definition excludes centrally controlled undervoltage-based load shedding, which utilizes inputs from multiple locations and may also utilize inputs other than voltages (such as generator reactive reserves, facility loadings, equipment statuses, etc.). The design and characteristics of a centrally controlled undervoltage-based load shedding system are the same as that of a Remedial Action Scheme (RAS), wherein load shedding is the remedial action. Therefore, just like for a RAS, the failure of a single component can compromise the reliable operation of centrally controlled undervoltage-based load shedding.

To ensure that the applicability of the standard includes only those undervoltage-based load shedding systems whose performance has an impact on system reliability, a UVLS Program must mitigate risk of one or more of the following: voltage instability, voltage collapse, or Cascading impacting the Bulk Electric System (BES). An example of a program that would not fall under this category is undervoltage-based load shedding installed to mitigate damage to equipment or local loads that are directly affected by the low voltage event.

Figure 1 below is an example of a BES subsystem for which a UVLS system could be used as a solution to mitigate various issues following the loss of the 345 kV double circuit line between buses A and B. If the consequence of this Contingency does not impact the BES by leading to voltage instability, voltage collapse, or Cascading, a UVLS system (installed at either, or both, bus B and D) used to mitigate this Contingency would not fall under the definition of a UVLS Program. However, if this same UVLS system is used to mitigate an Adverse Reliability Impact outside this contained area, it would be classified as a wide-area undervoltage problem and would fall under the definition of UVLS Program.

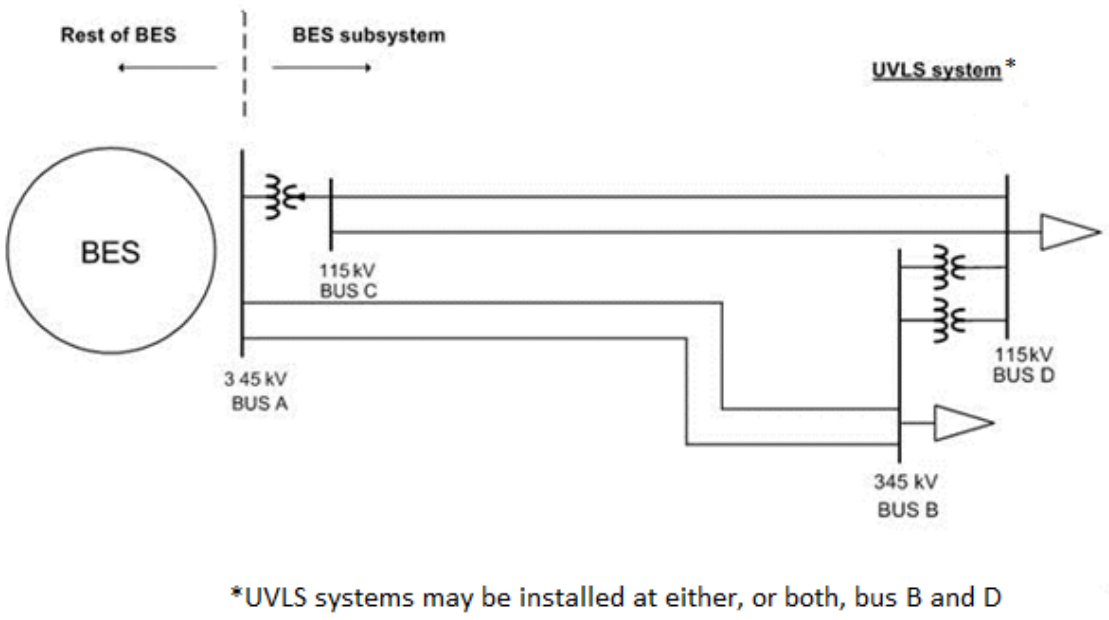

Figure 1: UVLS Subsystem

Guidelines for Requirements

Table 1 provides a high-level overview of the requirements contained in the standard.

Table 1: High-Level Requirement Overview

Requirement	Entity	Evaluate Program Effectiveness	Adhere to Program Specifications and Schedule	Perform Program Assessment (Periodic or Performance)	Develop a CAP to Address Program Deficiencies	Update and/or Share Program Data
R1	PC or TP	X				
R2	UVLS entity		X			
R3	PC or TP	X		X		
R4	PC or TP	X		X		
R5	PC or TP				X	
R6	PC					X
R7	UVLS entity					X
R8	PC					X

Guidelines for Requirement R1

A UVLS Program may be developed and implemented to either serve as a safety net system protection measure against unforeseen extreme Contingencies or to achieve specific system

performance for known transmission Contingencies for which dropping of load is allowed under Transmission Planning (TPL) Reliability Standards. Regardless of the purpose, it is important that the UVLS Program being implemented is effective in terms that it mitigates undervoltage conditions impacting the Bulk Electric System (BES), leading to voltage instability, voltage collapse, or Cascading. Consideration should be given to voltage set points and time delays, rate of voltage decay or recovery, power flow levels, etc. when designing a UVLS Program.

For the UVLS Program to be effective in achieving its goal, it is also necessary that the UVLS Program is coordinated with generator voltage ride-through capabilities and other protection and control systems that may have an impact on the performance of the UVLS Program. Some of these protection and control systems may include, but are not limited to, transmission line protection, RAS, other undervoltage-based load shedding programs, autoreclosing, and controls of shunt capacitors, reactors, and static voltampere-reactive systems (SVSs).

For example, if the purpose of a UVLS Program is to mitigate fault-induced delayed voltage recovery (FIDVR) events in a large load center that also includes local generation, it is important that such a UVLS Program is coordinated with local generators' voltage ride-through capabilities. Generators in the vicinity of a load center are critical to providing dynamic voltage support to the system during FIDVR events. To maximize the benefit of on-line generation, the best practice may be to shed load prior to generation trip. However, occasionally, it may be best to let generation trip prior to load shed. Therefore, the impact of generation tripping should be considered while designing a UVLS Program.

Another example that can be highlighted is the coordination of a UVLS Program with automatic shunt reactor tripping devices if there are any on the system. Most likely, any shunt reactors on the system will trip off automatically after some time delay during low voltage conditions. In such cases, shunt reactors should be tripped before the load is shed to preserve the system. This may require coordination of time delays associated with the UVLS Program with shunt reactor tripping devices.

The examples given above demonstrate that, for a UVLS Program to be effective, proper consideration should be given to coordination of a UVLS Program with generator ride-through capabilities and other protection and control systems.

Guidelines for Requirement R2

Once a Planning Coordinator (PC) or Transmission Planner (TP) has identified a need for a UVLS Program, the Planning Coordinator or Transmission Planner will develop a program that includes specifications and an implementation schedule, which are then provided to UVLS entities per Requirement R1. Specifications may include voltage set points, time delays, amount of load to be shed, and the location at which load needs to be shed. If UVLS entities do not implement the UVLS Program according to the specifications and schedule provided, the UVLS Program may not be effective and may not achieve its intended goal. The UVLS entity must document that all necessary actions were completed to implement the UVLS Program.

Similarly, when a Corrective Action Plan (CAP) to address UVLS Program deficiencies is developed by the Planning Coordinator or Transmission Planner and provided to UVLS entities per Requirement R5, UVLS entities must comply with the CAP and its associated implementation schedule to ensure that the UVLS Program is effective. The UVLS entity is required to complete the actions specified in the CAP, document the plan implementation, and retain the appropriate evidence to demonstrate implementation and completion.

Deferrals or other relevant changes to the UVLS Program specifications or CAP need to be documented so that the record includes not only what was planned, but what was implemented. Depending on the planning and documentation format used by the responsible entity, evidence of a successful execution could consist of signed-off work orders, printouts from work management systems, spreadsheets of planned versus completed work, timesheets, work inspection reports, paid invoices, photographs, walk-through reports, or other evidence.

For example, documentation of a CAP provides an auditable progress and completion confirmation for the identified UVLS Program deficiency:

CAP Example 1 - Corrective actions for a quick triggering problem; preemptive actions for similar installations:

The PC or TP obtains fault records from a UVLS entity that participates in its UVLS Program that indicate a group of UVLS relays triggered at the appropriate undervoltage level but with shorter delays than expected. The PC or TP directed the UVLS entity to schedule on-site inspections within three weeks. The results of the inspection confirmed that the delay-time programmed on the relays was 60 cycles instead of 90 cycles. The PC or TP then directed the UVLS entity to correct to a 90-cycle time delay setting of the UVLS relays identified to have shorter time delay settings within eight weeks.

Applicability to other UVLS relays: The PC or TP then developed a schedule with the UVLS entity to verify and adjust all remaining UVLS relays time delay settings within a one-year period.

The PC or TP verified completion of verification and adjustment of the time delay settings for all of the UVLS entity's equipment that participates in the PC or TP UVLS Program

CAP Example 2 - Corrective actions for a firmware problem; preemptive actions for similar installations:

The PC or TP obtains fault records on 6/4/2014 from a UVLS entity that participates in its UVLS Program. The UVLS entity also provided the fault records to the manufacturer, who responded on 6/11/2014 that the Misoperation[2] of the UVLS relay was caused by a bug in version 2 firmware, and recommended installing version 3 firmware. The PC or TP approved the UVLS entity's plan to schedule Version 3 firmware installation on 6/12/2014.

[2] Misoperation of Protection Systems reporting was initiated by the NERC Board of Trustees adopted NERC Rules of Procedure, Section 1600, Request for Data or Information. Refer to: *Request for Data of Information, Protection System Misoperation Data Collection*, August 14, 2014. http://www.nerc.com/pa/RAPA/ProctectionSystem Misoperations/PRC-004-3%20Section%201600%20Data%20Request_20140729.pdf.

Applicability to other UVLS relays: The PC or TP then developed a schedule with the UVLS entity to install firmware version 3 at all of the UVLS entity's UVLS relays that are determined to be programmed with version 2 firmware. The completion date was scheduled no-later-than 12/31/2014.

The firmware replacements were completed on 12/4/2014.

Guidelines for Requirement R3

In addition to the initial studies required to develop a UVLS Program, periodic comprehensive assessments (detailed analyses) are required to ensure its continued effectiveness. This assessment is required to be completed at least once every 60 calendar months to capture the accumulated effects of minor changes to the system that have occurred since the last assessment was completed. However, at any point in time, a Planning Coordinator or Transmission Planner may also determine that a material change[3] to system topology or operating conditions affects the performance of the UVLS Program and therefore necessitates the same comprehensive assessment. Regardless of the trigger, each assessment should include an evaluation of each UVLS Program to ensure the continued integration through coordination.

This comprehensive assessment complements the TPL-001-4 annual assessment requirement to evaluate the impact of protection systems. The 60-month period is the same time frame used in TPL-001-4 and in PRC-006-1.

As specified in Requirement R3, a comprehensive assessment must be performed at least once every 60 calendar months. If a Planning Coordinator or Transmission Planner conducts a comprehensive assessment sooner for the reasons discussed above, the 60-month time period would restart upon completion of this assessment.

Guidelines for Requirement R4

After a voltage excursion event, the goal of the assessment required in Requirement R4 is to evaluate: (1) whether the UVLS Program resolved the undervoltage issues, and (2) the performance of the UVLS Program equipment. The assessment should include event data analysis, such as the relevant sequence of events leading to the undervoltage conditions (e.g., Contingencies, operation of protection systems, and RAS) and field measurements useful to analyzing the behavior of the system. A comprehensive description of the UVLS Program operation should be presented, including conditions of the trigger (e.g., voltage levels, time delays) and amount of load shed for each affected substation. Assessment of the event is performed to evaluate the level of performance of the program for the event of interest and to identify deficiencies to be included in a CAP per Requirement R5. Misoperation of UVLS equipment is addressed as a deficiency. Reporting of UVLS equipment Misoperations are

[3] It is understood that the term material change is not transportable on a continent-wide basis. This determination must be made by the Planning Coordinator or Transmission Planner and should be accompanied by documentation to support the technical rationale for determining material changes.

addressed by the NERC *Request for Data and Information, Protection System Misoperation Data Collection*.[4]

The studies and analyses showing the effectiveness of the UVLS Program can be similar to what is required in Requirements R1 and R3, but should include a clear link between the evaluation of effectiveness (in studies using simulations) and the analysis of the event (with measurements and event data) that actually occurred. For example, differences between the expected and actual system behavior for the event of interest should be discussed and modeling assumptions should be evaluated. Important discrepancies between the simulations and the actual event should be investigated.

Considering the importance of an event that involves the operation of a UVLS Program, the 12-calendar-month period provides adequate time to analyze the event and perform an assessment while identifying deficiencies within a reasonable time. This time period is also required in PRC-006-1.

Guidelines for Requirement R5

Requirement R5 promotes the prudent correction of an identified problem during the assessment of a UVLS Program. Per Requirements R3 and R4, an assessment of an active UVLS Program is triggered:

- Within 12 calendar months of an event that resulted in a voltage excursion for which the program was designed to operate
- At least once every 60 calendar months. The default time frame of 60 calendar months or less between assessments has the intention to assure that the cumulative changes to the network and operating condition affecting the UVLS Program are evaluated

Since every UVLS is unique, if material changes are made to system topology or operating conditions, the Planning Coordinator or Transmission Planner will decide the degree to which the change in topology or operating condition becomes a material change sufficient to trigger an assessment of the existing UVLS Program.

A CAP is a list of actions and an associated timetable for implementation to remedy a specific problem. It is a proven tool for resolving operational problems. Per Requirement R5, the Planning Coordinator or Transmission Planner is required to develop a CAP and provide it to UVLS entities to accomplish the purpose of this requirement, which is to prevent future deficiencies in the UVLS Program, thereby minimizing risk to the system. Determining the cause of the deficiency is essential in developing an effective CAP to avoid future re-occurrence of the same problem. A CAP can be revised if additional causes are found.

Based on industry experience and operational coordination timeframes, three calendar months from the date an assessment is completed is a reasonable time frame for development of a CAP, including time to consider alternative solutions and coordination of resources. The “within three

[4] Id.

calendar months" time frame is solely to develop a CAP, including its implementation schedule, and provide it to UVLS entities. It does not include the time needed for its implementation by UVLS entities. This implementation time frame is dictated within the CAP's associated timetable for implementation, and the execution of the CAP according to its schedule is required in Requirement R2.

Guidelines for Requirements R6–R8

An accurate UVLS Program database is necessary for the Planning Coordinator or Transmission Planner to perform system reliability assessment studies and event analysis studies. Without accurate data, there is a possibility that annual reliability assessment studies that are performed by the Planning Coordinator or Transmission Planner can lead to erroneous results and therefore impact reliability. Also, without the accurate data, it is very difficult for the Planning Coordinator or Transmission Planner to duplicate a UVLS event and determine the root cause of the problem.

To support a UVLS Program database, it is necessary for each UVLS entity to provide accurate data to its Planning Coordinator. Each UVLS entity will provide the data according to the specified format and schedule provided by the Planning Coordinator. This is required in order for the Planning Coordinator to maintain and support a comprehensive UVLS Program database. By having a comprehensive database, the Planning Coordinator can embark on a reliability assessment or event analysis/benchmarking studies, identify the issues with the UVLS Program, and develop Corrective Action Plans.

The UVLS Program database may include, but is not limited to the following:

- Owner and operator of the UVLS Program
- Size and location of customer load, or percent of connected load, to be interrupted
- Corresponding voltage set points and clearing times
- Time delay from initiation to trip signal
- Breaker operating times
- Any other schemes that are part of or impact the UVLS Programs, such as related generation protection, islanding schemes, automatic load restoration schemes, underfrequency load shedding (UFLS), and RAS

Additionally, the UVLS Program database is required to be updated annually (once every calendar year) by the Planning Coordinator. The intent here is for UVLS entities to review the data annually and provide changes to the Planning Coordinators so that Planning Coordinators can keep the databases current and accurate for performing event analysis and other assessments.

Finally, a Planning Coordinator is required to provide information to other Planning Coordinators and Transmission Planners within its Interconnection, and other functional entities with a reliability need, within 30 calendar days of receipt of a written request. Thirty calendar days was selected as the time frame as it is considered to be reasonable and well- accepted by the industry. Also, this requirement of sharing the database with applicable functional entities supports the

directive provided by FERC that requires an integrated and coordinated approach to UVLS programs (Paragraph 1509 of FERC Order No. 693).

Rationale

During development of this standard, text boxes were embedded within the standard to explain the rationale for various parts of the standard. Upon BOT approval, the text from the rationale text boxes was moved to this section.

Rationale for Applicability

This standard is applicable to Planning Coordinators and Transmission Planners that have or are developing a UVLS Program, and to Distribution Providers and Transmission Owners responsible for the ownership, operation, or control of UVLS equipment as required by the UVLS Program established by the Transmission Planner or Planning Coordinator. These Distribution Providers and Transmission Owners are referred to as UVLS entities for the purpose of this standard.

The applicability includes both the Planning Coordinator and Transmission Planner because either may be responsible for designing and coordinating the program based on agreements, memorandums of understanding, or tariffs.

The phrase "Planning Coordinator or Transmission Planner" provides the latitude for applicability to the entity that will perform the action. The expectation is not that both parties will perform the action, but rather that the Planning Coordinator and Transmission Planner will engage in discussion to determine the appropriate responsible entity.

Rationale for R1

In Paragraph 1509 from Order No. 693, FERC directed NERC to require an integrated and coordinated approach to all protection systems. The drafting team agrees that a lack of coordination among protection systems is a key risk to reliability, and that each Planning Coordinator or Transmission Planner that develops a UVLS Program should evaluate the program's viability and effectiveness prior to implementation. This evaluation should include studies and analyses used when developing the program that show implementation of the program resolves the identified undervoltage conditions that led to its design. These studies and analyses should also show that the UVLS Program is integrated through coordination with generator voltage ride-through capabilities and other protection and control systems. Though presented as separate items, the drafting team recognizes that the studies that show coordination considerations and that the program addresses undervoltage issues may be interrelated and presented as one comprehensive analysis.

In addition, Requirement R1 also requires the Planning Coordinator or Transmission Planner to provide the UVLS Program's specifications and implementation schedule to applicable UVLS entities to implement the program. It is noted that studies to evaluate the effectiveness of the program should be completed prior to providing the specifications and schedule.

Rationale for R2

UVLS entities must implement a UVLS Program or address any necessary corrective actions for a UVLS Program according to the specifications and schedule provided by the Planning Coordinator or Transmission Planner. If UVLS entities do not implement the UVLS Program according to the specifications and schedule provided, the UVLS Program may not be effective and may not achieve its intended goal.

Rationale for R3

A periodic comprehensive assessment (detailed analysis) should be conducted to identify and catalogue the accumulated effects of minor changes to the system that have occurred since the last assessment was completed, and should include an evaluation of each UVLS Program to ensure the continued integration through coordination. This comprehensive assessment supplements the NERC Reliability Standard TPL-001-4 annual assessment requirement to evaluate the impact of protection systems.

Based on the drafting team's knowledge and experience, and in keeping with time frames contained in similar requirements from other PRC Reliability Standards, 60 calendar months was determined to be the maximum amount of time allowable between assessments. Assessments will be performed sooner than the end of the 60-calendar month period if the Planning Coordinator or Transmission Planner determines that there are material changes to system topology or operating conditions that affect the performance of a UVLS Program. Note that the 60-calendar-month time frame would reset after each assessment.

Rationale for R4

A UVLS Program not functioning as expected during a voltage excursion event for which the UVLS Program was designed to operate presents a critical risk to system reliability. Therefore, a timely assessment to evaluate (1) whether the UVLS Program resolved the undervoltage issues and (2) the performance of the UVLS Program equipment associated with the applicable event is essential. The 12 calendar months (from the date of the event) provides adequate time to coordinate with other Planning Coordinators, Transmission Planners, Transmission Operators, and UVLS entities, simulate pre- and post-event conditions, and complete the performance assessment.

Rationale for R5

If program deficiencies are identified during an assessment performed in either Requirement R3 or R4, the Planning Coordinator or Transmission Planner must develop a Corrective Action Plan (CAP) to address the deficiencies. Based on the drafting team's knowledge and experience with UVLS studies, three calendar months was determined to provide a judicious balance between the reliability need to address deficiencies expeditiously and the time needed to consider potential

solutions, coordinate resources, develop a CAP and implementation schedule, and provide the CAP and schedule to UVLS entities.

It is noted that the three-month time frame is only to develop the CAP and provide it to UVLS entities and does not encompass the time UVLS entities have to implement the CAP. Requirement R2 requires UVLS entities to execute the CAP according to the schedule provided by the Planning Coordinator or Transmission Planner.

Rationale for R6

Having accurate and current data is required for the Planning Coordinator to perform undervoltage studies and for use in event analyses. Requirement R6 supports this reliability need by requiring the Planning Coordinator to update its UVLS Program database at least once each calendar year.

Rationale for R7

Having accurate and current data is required for the Planning Coordinator to perform undervoltage studies and for use in event analyses. Requirement R7 supports this reliability need by requiring the UVLS entity to provide UVLS Program data in accordance with specified parameters.

Rationale for R8

Requirement R8 supports the integrated and coordinated approach to UVLS programs directed by Paragraph 1509 of Order No. 693 by requiring that UVLS Program data be shared with neighboring Planning Coordinators and Transmission Planners within a reasonable time period. Requests for the database should also be fulfilled for those functional entities that have a reliability need for the data (such as the Transmission Operators that develop System Operating Limits and Reliability Coordinators that develop Interconnection Reliability Operating Limits).

Frequently Asked Questions

To succinctly address common comment themes that require drafting team response on Project 2008-02 UVLS (proposed PRC-010-1), the drafting team provides the following discussion in the construct of an FAQ format.

Introduction

This Frequently Asked Questions (FAQ) document was created during the development of PRC-010-1 (*Undervoltage Load Shedding*)[5,6] to succinctly address common comment themes with respect to the approach and intent of the Project 2008-02 Undervoltage Load Shedding (UVLS)[7] standard drafting team ("drafting team"). This FAQ document is the outcome of comments received during comment periods and multiple outreach sessions with industry. All comments submitted by industry during comment periods may be reviewed on the project page.

Subsequent to the adoption of PRC-010-1, the UVLS drafting team made minor revisions to the standard address the UVLS Misoperation identification and correction.[8] This FAQ document was amended to reflect up the approach and intent of the drafting team during the development of PRC-010-2 concerning Misoperation of UVLS equipment.

Purpose of Standard Revision

1) What is the basis for a revision of the existing UVLS standards?

The initial input into a revision of the existing UVLS standards is FERC Order No. 693,[9] Paragraph 1509, which directed the ERO to develop a modification of PRC-010-0 that "requires that an integrated and coordinated approach be included in all protection systems on the Bulk-Power System, including generators and transmission lines, generators' low voltage ride through capabilities, and UFLS and UVLS programs." In addition, *The Final Report on the August 14, 2003 Blackout in the United States and Canada: Causes and Recommendations*[10] ("August 14 Blackout Report") showed that proper coordination would have mitigated effects if UVLS was used as a tool.

Additional inputs included 1) recommendations from the NERC System Protection and Control Subcommittee (SPCS) in its December 2010 *Technical Review of UVLS-Related Standards*[11] to combine the four existing UVLS standards, revise the applicability to entities responsible for UVLS program design, implementation, and coordination, specifically include a requirement for

[5] (http://www.nerc.com/_layouts/PrintStandard.aspx?standardnumber=PRC-010-1&title=Undervoltage%20Load%20Shedding).
[6] Adopted by the NERC Board of Trustees on November 14, 2014.
[7] (http://www.nerc.com/pa/Stand/Pages/Project-2008-02-Undervoltage-Load-Shedding.aspx).
[8] Refer to Project 2010-05.1, which developed PRC-004-3 (Protection System Misoperation Identification and Correction) concurrently with the development of PRC-010-1. (http://www.nerc.com/pa/Stand/Pages/Project2010-05_Protection_System_Misoperations.aspx).
[9] (http://www.nerc.com/docs/docs/ferc/order_693.pdf).
[10] (http://energy.gov/sites/prod/files/oeprod/DocumentsandMedia/BlackoutFinal-Web.pdf).
[11] (http://www.nerc.com/docs/pc/spctf/PRC-010_022%20Report_Approved_20101208.pdf).

assessment of coordination between UVLS programs and all other protection systems, and differentiate post-event validation of UVLS program design from verifying correct operation of UVLS equipment; 2) the existing UVLS standards were not in the current results-based format; 3) the preceding revision of the underfrequency load shedding (UFLS) standards had similar types of requirements and had been completed under the construct of a consolidation; and 4) the Independent Expert Review Panel recommendations, which included an evaluation of the existing standards' applicability and level of specificity.

The drafting team agrees that a lack of coordination among protection systems is a key risk to reliability. As part of the revision to address this, the drafting team also agreed that an evaluation and consolidation of the existing UVLS standards was necessary to meet current Reliability Standard development initiatives and to provide clear, comprehensive requirements to address the application and coordination of UVLS.

2) UVLS programs are not mandatory—is compliance for an optional tool necessary?

The drafting team asserts that a key takeaway from the August 14 Blackout Report is that coordination of UVLS with other protection systems could have mitigated the effects if UVLS was used as a tool. Although the use of UVLS is not mandatory, if it is determined that this system preservation measure is necessary to support reliability and a UVLS program is installed, the program needs to be properly coordinated, implemented, and assessed due to the inherent associated reliability risks. As such, there needs to be a level of performance required to properly protect system reliability. Of note, PRC-010-1 and PRC-010-2 apply to the defined term "UVLS Program," which limits the standard's applicability to only those undervoltage-based load shedding programs whose performance has an impact on system reliability.[12]

Coordination with Project 2009-03 Emergency Operations

3) EOP-003-2 has potential redundant requirements with proposed PRC-010-1—how is this being addressed?

As part of its five-year review, Project 2009-03 – Emergency Operations (EOP) identified EOP-003-2 (*Load Shedding Plans*),[13] Requirements R2, R4, and R7 as being more properly covered by Project 2008-02 – UVLS. Both projects were strategically coordinated to move in lockstep from a timing perspective to address these requirements. Project 2009-03 – EOP proposed to revise and consolidate EOP-001-2.1b (*Emergency Operations Planning*),[14] EOP-002-3 (Capacity and Energy Emergencies),[15] and EOP-003-2 to create EOP-011-1, will retire the noted EOP-003-2

[12] The term "UVLS Program" used herein was adopted by the NERC Board of Trustees on November 14, 2014.
[13] (http://www.nerc.com/_layouts/PrintStandard.aspx?standardnumber=EOP-003-2&title=Load%20Shedding%20Plans).
[14] (http://www.nerc.com/_layouts/PrintStandard.aspx?standardnumber=EOP-001-2.1b&title=Emergency%20Operations%20Planning).
[15] (http://www.nerc.com/_layouts/PrintStandard.aspx?standardnumber=EOP-002-3&title=Capacity%20and%20Energy%20Emergencies).

requirements (among other revisions), and the Project 2008-02 – UVLS *Mapping Document* will show how PRC-010-1 encompasses the retired content accordingly. Slated to have aligning effective dates, both EOP-011-1 (*Emergency Operations*)[16] and PRC-010-1 will be posted and balloted separately but concurrently, so that industry stakeholders will be able to clearly evaluate the transition. Please see the posted Project 2008-02 UVLS Project Coordination Plan for more information.

"UVLS Program" Definition

4) Why is the introduction of the new defined term "UVLS Program" necessary?

The drafting team found it necessary to introduce the term "UVLS Program" for inclusion in the *Glossary of Terms Used in NERC Reliability Standards*[17] ("NERC Glossary") because different types of UVLS systems need to be treated appropriately with respect to reliability requirements. Therefore, the term establishes which UVLS systems PRC-010-1 will apply to an: "automatic load shedding program consisting of distributed relays and controls used to mitigate undervoltage conditions impacting the Bulk Electric System (BES), leading to voltage instability, voltage collapse, or Cascading. Centrally controlled undervoltage-based load shedding is not included."

The definition excludes locally-applied relays that are designed to protect a contained area or, in other words, are not designed to mitigate wide-area voltage collapse. This exclusion is not explicit in these terms in the enforceable language of the definition since the meaning and measurement of "local" or "wide-area" varies greatly on a continent-wide basis and could potentially be interpreted differently by auditors and the applicable functional entities. Therefore, the definition as written is meant to provide flexibility for the Planning Coordinator or Transmission Planner to determine if a UVLS system falls under the defined term with respect to its impact on the reliability of the BES (voltage instability, voltage collapse, or Cascading). To further support the intended exclusion, further discussion and an example are provided on in the PRC-010-1 and PRC-010-2 Guidelines and Technical Basis section under the heading "Guidelines for UVLS Program Definition."

The definition does explicitly note that the term excludes centrally controlled undervoltage-based load shedding. This type of load shedding is excluded because the drafting team asserts that the design and characteristics of centrally controlled undervoltage-based load shedding are commensurate with those of a Special Protection System (SPS) or Remedial Action Scheme (RAS) and should therefore be subject to SPS or RAS-related Reliability Standards. See PRC-010-1 and PRC-010-2 Guidelines and Technical Basis section under the heading "Guidelines for UVLS Program Definition" for further discussion.

[16] (http://www.nerc.com/_layouts/PrintStandard.aspx?standardnumber=EOP-011-1&title=Emergency%20Operations).
[17] (http://www.nerc.com/pa/Stand/Glossary%20of%20Terms/Glossary_of_Terms.pdf).

5) If the definition excludes certain types of UVLS, does this preclude an "integrated" approach (FERC Order No. 693, Paragraph 1509)?

The defined term "UVLS Program" clarifies which UVLS systems are subject to the requirements in PRC-010-1 and PRC-010-2. The resulting exclusions from these versions of the standard do not preclude an "integrated" approach because the standard requires that an entity coordinate with all other protection and control systems as necessary, which may include other types of UVLS (i.e., locally-applied UVLS relays and centrally controlled undervoltage-based load shedding).

6) Where will centrally controlled undervoltage-based load shedding be covered?

As explained immediately above, the Requirements of PRC-010-1 and PRC-010-2 are applicable to the proposed NERC Glossary term "UVLS Program," which excludes centrally controlled undervoltage-based load shedding because its design and characteristics are commensurate with those of an SPS or RAS. However, the NERC Glossary during the development of PRC-010-1 definition of "Special Protection System" excluded UVLS. Therefore, the work under Project 2010-05.2 – Special Protection Systems (Phase 2 of Protection Systems) combined the NERC Glossary definition of "Special Protection System" into the single term "Remedial Action Scheme."[18] The definition revisions specifically excluded UVLS Programs, therefore including centrally controlled undervoltage-based shedding.

Consequently, the introduction of the term "UVLS Program" and the conforming revision to the term "Remedial Action Scheme" explicitly clarifies that RAS-related standards are applicable to centrally controlled undervoltage-based load shedding. The implementation plan for the revised definition of "Remedial Action Scheme" will address entities that will have newly identified RAS resulting from the application of the defined term.

Similar to the coordination effort with Project 2009-03 – EOP explained above, Project 2008-02 – UVLS and Project 2010-05.2 – SPS were coordinated to ensure that the effective dates of the adopted definitions of "Remedial Action Scheme" and "UVLS Program," the PRC-010-1 and PRC-010-1 Reliability Standards, and all associated retirements align.

7) Is the term "UVLS Program" inclusive of a collection of independent UVLS relays?

No; multiple independent relays do not constitute a program. While the definition stipulates that a UVLS Program consists of distributed relays and controls, the definition specifies that it must be "[a]n automatic load shedding program, consisting of distributed relays and controls, used to mitigate undervoltage conditions impacting the Bulk Electric System(BES), leading to voltage instability, voltage collapse, or Cascading. Centrally controlled undervoltage-based load shedding is not included."

[18] Adopted by the NERC Board of Trustees on November 14, 2014.

Applicability

8) What is meant by the phrase "Planning Coordinator or Transmission Planner"?

The PRC-010-1 and PRC-010-2 Reliability Standards are applicable to both the Planning Coordinator and Transmission Planner because either may be responsible for designing and coordinating the program based on agreements, memorandums of understanding, or tariffs. The phrase "Planning Coordinator or Transmission Planner" provides the flexibility for applicability to the entity that will perform the action. The expectation is not that both parties will perform the action, but rather that the Planning Coordinator and Transmission Planner will engage in discussion to determine the appropriate responsible entity. In addition, the requirements containing this phrase have specific language to qualify the responsible entity. For example, Requirement R1 states: "Each Planning Coordinator or Transmission Planner *that is developing* a UVLS Program shall . . ." This language provides clarity that the applicable entity would be the one that is developing the program.

9) Why is the Transmission Operator not included?

While the Transmission Operator may be involved with UVLS Program activities, the drafting team did not identify any required performance for the Transmission Operator that was necessary to capture within PRC-010-1 and PRC-010-2, since the Transmission Operator does not have the resources necessary to implement program specifications. If responsibilities are delegated to the Transmission Operator by the Transmission Owner, the Transmission Owner is still the accountable party.

To the extent that the Transmission Operator is required to have knowledge of system relays and protection systems, the drafting team notes that this requirement is covered under PRC-001-1.1 (*System Protection Coordination*),[19] Requirement R1. It is also noted that manual load shedding, for which the Transmission Operator is responsible, is not in the purview of PRC-010-1 and PRC-010-2, as it is covered under current EOP-003-2 and will subsequently be covered by proposed EOP-011-1 (see Project 2009-03 – Emergency Operations).

10) What about UVLS schemes owned by Transmission Owners, Distribution Providers, or Transmission Operators that are not required by the planner?

The PRC-010-1 and PRC-010-2 Reliability Standards are applicable to the term "UVLS Program." The drafting team notes that, by its defining attributes, a UVLS Program would be required and developed by a Planning Coordinator or Transmission Planner. The nature of a UVLS scheme developed or required by a Distribution Provider, Transmission Operator, or Transmission Owner

[19] http://www.nerc.com/_layouts/PrintStandard.aspx?standardnumber=PRC-001-1.1&title=System%20Protection%20Coordination.

would not meet the attributes of the defined term and would therefore not have the design and characteristics necessary to be subject to the requirements of PRC-010-1 and PRC-010-2.

Requirements R1, R3, R4, and R5

11) What is required to evaluate the coordination referenced in Requirement R1, part 1.2?

Requirement R1 requires each Planning Coordinator or Transmission Planner that develops a UVLS Program to evaluate the program's viability and effectiveness prior to implementation. This evaluation should include studies and analyses used when developing the program that show implementation of the program resolves the identified undervoltage issues that led to its design. These studies and analyses should also show that the UVLS Program is integrated through coordination with generator voltage ride-through capabilities and other protection and control systems. As such, the requirement is meant to provide flexibility for an entity to make the proper determinations, including the considerations for coordination, with respect to program effectiveness based on system characteristics. For further guidance on and examples of coordination considerations, please see the portion of the Guidelines and Technical Basis section under the Requirement R1 heading.

12) Requirements R1, R3, and R4 seem to all require evaluations of program effectiveness—how are they different?

Requirements R1, R3, and R4 do require evaluations of program effectiveness, but they are each at distinct points in time.

Requirement R1 requires evaluation of program effectiveness (by way of the qualifying parts) at the onset of program development, or during the initial planning stage, prior to implementation. Requirement R3 requires the same objectives of an evaluation of effectiveness, but at the point of a mandatory periodic review (at least once every 60 calendar months). Requirement R4 addresses the performance of a UVLS Program after an event (for applicable voltage excursion) to evaluate whether the UVLS Program resolved the undervoltage issues associated with the event.

It is noted that, because of the separate activities of each requirement, UVLS Program deficiencies found as a result of the assessments performed in Requirement R3 or R4 would not be violations of Requirement R1.

13) Requirement R4 would require the Planning Coordinator or Transmission Planner to review all voltage excursions—isn't this unduly burdensome?

While Requirement R4 essentially requires the Planning Coordinator or Transmission Planner to review all voltage excursions to see if they fall below the initializing set points of the UVLS Program, the drafting team contends that it will be clearly evident if voltage falls below the UVLS

threshold because either a) UVLS devices will operate; or b) the system will experience the adverse conditions the UVLS Program was installed to mitigate.

In addition, the drafting team acknowledges that the Planning Coordinator or Transmission Planner may not have the ability to know when voltage excursions are occurring since they are not operating entities. However, a process for the Transmission Operator, Transmission Owner, or Distribution Provider to notify the Transmission Planner or Planning Coordinator of such voltage excursion events is consistent with standard utility practice.

14) PRC-022-1 required the analysis of UVLS Misoperations. How is this addressed in PRC-010-1?

One of the recommendations in the SPCS report was to clearly differentiate between the post-event process of validating the effectiveness of the UVLS program design, its coordination with other protection and control systems, and the potential need to modify the program design (activities addressed in PRC-010-1) and the process of verifying correct operation of UVLS equipment. Because PRC-010-1 was not specific concerning the Misoperation of UVLS equipment, the drafting team made a subsequent revision creating PRC-010-2. Version two (PRC-010-2) now requires that the assessment according to Requirement R4 include the performance (i.e., operation or non-operation) of the UVLS Program equipment.

Relative to the assessment, Requirement R5 requires that a Corrective Action Plan be developed to address any identified deficiencies. This structure ensures that UVLS Program equipment is assessed to identify any Misoperation which could affect BES reliability. Although, the UVLS drafting team maintained during development of PRC-010-1 that verifying correct operation of UVLS equipment should be addressed in PRC-004, the drafting team included UVLS that is intended to trip one or more BES Elements in the proposed PRC-004-5.

Requirements R6, R7, and R8

15) Do Requirements R6, R7, and R8 overlap with the requirements of MOD-032-1?

While both MOD-032-1 (*Data for Power System Modeling and Analysis*)[20] and Requirements R6, R7, and R8 of PRC-010-1 and PRC-010-2 address data requirements, MOD-032-1 establishes overarching modeling data requirements with respect to consistency in format and reporting procedures, whereas the PRC-010-1 and PRC-010-2 requirements address the need to maintain and share data and databases for the purposes of studies for use in event analyses for UVLS Programs specifically. While Reliability Standards in general may have overlap in this manner, the activities in these requirements remain distinctly different.

[20] (http://www.nerc.com/_layouts/PrintStandard.aspx?standardnumber=MOD-032-1&title=Data%20for%20Power%20System%20Modeling%20and%20Analysis).

16) Requirements R6, R7, and R8 appear to be administrative — doesn't this conflict with Paragraph 81 criteria?[21]

Proper maintenance and timely sharing of UVLS Program data as required by Requirements R6, R7, and R8 is necessary to inform the Planning Coordinator or Transmission Planner's studies and analyses. While administrative tasks are required, the tasks have a core reliability-based need.

In addition, Requirements R6, R7, and R8 were written to emulate FERC-approved PRC-006-2 (*Automatic Underfrequency Load Shedding*)[22,23] data requirements. While some of these analogous requirements in PRC-006-2 are listed as candidates for Phase 2 of the Paragraph 81 project, they are not yet approved as meeting the criteria; furthermore, the Independent Expert Review Panel has recommended that these Paragraph 81 candidates not be included for deletion, citing that "there should be a clear expectation for Planning Coordinators to share data necessary to determine their UFLS program parameters."

[21] Refer to Standards Independent Expert Review Project (IERP). (http://www.nerc.com/pa/Stand/Standard%20Development%20Plan/Standards_Independent_Experts_Review_Project_Report-SOTC_and_Board.pdf).
[22] (http://www.nerc.com/_layouts/PrintStandard.aspx?standardnumber=PRC-006-2&title=Automatic%20Underfrequency%20Load%20Shedding).
[23] Adopted by the NERC Board of Trustees on November 14, 2014.

Effective Dates

PRC-004-5 shall become effective on the later of the first day following the Effective Date of PRC-010-1 or the first day of the first calendar quarter after the standard is approved by an applicable governmental authority or as otherwise provided for in a jurisdiction where approval by an applicable governmental authority is required for a standard to go into effect. Where approval by an applicable governmental authority is not required, the standard shall become effective on the later of the first day following the Effective Date of PRC-010-1 or the first day of the first calendar quarter after the date the standard is adopted by the NERC Board of Trustees or as otherwise provided for in that jurisdiction.

Standard Development Timeline

This section is maintained by the drafting team during the development of the standard and will be removed when the standard becomes effective.

Development Steps Completed

1. The NERC Board of Trustees ("Board") adopted PRC-004-4 and PRC-010-1 and retired PRC-022-1 on November 13, 2014.
2. The NERC Standards Committee authorized the initial posting of the standard on February 18, 2015.
3. Draft 1 of PRC-010-2 was posted for a 45-day formal comment period from February 20 – April 7, 2015 and an initial ballot in the last ten days of the comment period from March 27 – April 7, 2015.

Description of Current Draft

The UVLSSDT is posting Draft 2 of PRC-010-2 – Undervoltage Load Shedding for a 10-day final ballot.

Anticipated Actions	Date
45-day formal comment period with ballot	February 2015
10-day final ballot	April 2015
Board adoption	May 2015

Project Development Background

The undervoltage load shedding (UVLS) standard drafting team (SDT) was tasked with addressing Misoperation of UVLS equipment during the development of version one of PRC-010 and version three of PRC-004 in Project 2010-05.1 (i.e., Misoperation). This project has been named phase 2 of Project 2008-02 (i.e., UVLS) for clarity purposes. Each SDT for these two projects outlined work necessary to address Misoperation of UVLS equipment. This work was deferred, at the time, because both PRC-010-1 and PRC-004-3 contained dependencies with other projects requiring their completion. This phase two is a continuation of the work performed under the Standards Authorization Request (SAR) for Project 2008-02.

The revisions proposed in Reliability Standard PRC-010-2 meet the following objectives:

- Address the UVLS Misoperation the remaining work due to the retirement of PRC-022-1 (Undervoltage Load Shedding Program Performance) during the development of PRC-010-1 (Undervoltage Load Shedding)

- Ensure the performance of the UVLS equipment (i.e., operation or non-operation) within the UVLS Program is assessed and, if necessary, mitigated

Basis for Revision

Originally, Misoperation of UVLS equipment was planned to be appended to a future version of PRC-004 (Protection System Misoperation Identification and Correction). The SDT is proposing a two-prong approach by revising both PRC-004 and PRC-010 to address the concern of identifying Misoperations of UVLS equipment in PRC-022-1.

First, the SDT proposes an addition to the Applicability section of PRC-004 to include UVLS that is intended to trip one or more Bulk Electric System (BES) Elements. This is consistent with previous communication to industry about addressing Misoperation of UVLS equipment.[1] Entities will be required to address UVLS that trips a BES Element similarly to other Protection Systems in PRC-004. While the revision to PRC-004 consistent with the communicated approach, the SDT determined that the proposed revision fails to address the performance (operation or non-operations) of UVLS Program equipment not covered by the strict processes of PRC-004.

Second, the SDT is proposing clarifying revisions in PRC-010-2, Requirements R4 and R5 to address UVLS Program equipment performance. These revisions are not requiring UVLS entities to address UVLS protective relays not covered by the strict processes of PRC-004; however, PRC-010-2 is requiring UVLS entities to address the deficiencies (e.g., Misoperations) identified in the assessment performed by Planning Coordinator or Transmission Planner in Requirement R4. Deficiencies include the performance (operation or non-operation) issues of UVLS Program equipment. These deficiencies, if any, are addressed by the UVLS entities through a Corrective Action Plan (CAP) developed in Requirement R5 and executed by the UVLS entities in Requirement R2 of PRC-010.

The term “Misoperation” as defined by the Glossary of Terms Used in NERC Reliability Standards is not used within the Requirements of PRC-010; however, the term is used in the Guidelines and Technical Basis section of the standard to provide clarity that UVLS Program equipment deficiencies include Misoperations that are to be corrected by UVLS entities. The PRC-010-2 Reliability Standard mandates that UVLS entities are to correct the deficiencies identified by the Planning Coordinator or Transmission Planner, such as Misoperation of UVLS equipment. Deficiencies are identified through either the periodic assessment or an assessment performed following an event and included in a CAP to the UVLS entity. The structure used by the SDT allows the Planning Coordinator and Transmission Planner to assess UVLS equipment for Misoperation under PRC-010 rather than the Generator Owner, Transmission Owner, and Distribution Provider applicable to the strict processes of PRC-004.

[1] Refer to Implementation Plan for PRC-010-1 (http://www.nerc.com/pa/stand/Pages/PRC0101RI.aspx) and PRC-010-1 (http://www.nerc.com/pa/Stand/Pages/ReliabilityStandards.aspx), Introduction in the Guidelines and Technical Basis, last paragraph.

The two-pronged approach ensures that any UVLS Program equipment containing a deficiency is identified and corrected under PRC-010 and UVLS that trips a BES Element is corrected under PRC-004 to address the requirements in the retired PRC-022-1.

When this standard receives Board adoption, the rationale boxes in the Supplemental Material section of the standard will remain. The rationale box for Requirement R4 will be removed.

A. Introduction

1. **Title:** Undervoltage Load Shedding
2. **Number:** PRC-010-2
3. **Purpose:** To establish an integrated and coordinated approach to the design, evaluation, and reliable operation of Undervoltage Load Shedding Programs (UVLS Programs).
4. **Applicability:**

   4.1. Functional Entities:

   4.1.1 Planning Coordinator.

   4.1.2 Transmission Planner.

   4.1.3 Undervoltage load shedding (UVLS) entities – Distribution Providers and Transmission Owners responsible for the ownership, operation, or control of UVLS equipment as required by the UVLS Program established by the Transmission Planner or Planning Coordinator.

5. **Effective Date:** See Project 2008-02.2 Implementation Plan.

B. Requirements and Measures

R1. Each Planning Coordinator or Transmission Planner that is developing a UVLS Program shall evaluate its effectiveness and subsequently provide the UVLS Program's specifications and implementation schedule to the UVLS entities responsible for implementing the UVLS Program. The evaluation shall include, but is not limited to, studies and analyses that show: *[Violation Risk Factor: High] [Time Horizon: Long-term Planning]*

1.1. The implementation of the UVLS Program resolves the identified undervoltage issues that led to its development and design.

1.2. The UVLS Program is integrated through coordination with generator voltage ride-through capabilities and other protection and control systems, including, but not limited to, transmission line protection, autoreclosing, Remedial Action Schemes, and other undervoltage-based load shedding programs.

M1. Acceptable evidence may include, but is not limited to, date-stamped studies and analyses, reports, or other documentation detailing the effectiveness of the UVLS Program, and date-stamped communications showing that the UVLS Program specifications and implementation schedule were provided to UVLS entities.

R2. Each UVLS entity shall adhere to the UVLS Program specifications and implementation schedule determined by its Planning Coordinator or Transmission Planner associated

with UVLS Program development per Requirement R1 or with any Corrective Action Plans per Requirement R5. *[Violation Risk Factor: High] [Time Horizon: Long-term Planning]*

M2. Acceptable evidence must include date-stamped documentation on the completion of actions and may include, but is not limited to, identifying the equipment armed with UVLS relays, the UVLS relay settings, associated Load summaries, work management program records, work orders, and maintenance records.

R3. Each Planning Coordinator or Transmission Planner shall perform a comprehensive assessment to evaluate the effectiveness of each of its UVLS Programs at least once every 60 calendar months. Each assessment shall include, but is not limited to, studies and analyses that evaluate whether: *[Violation Risk Factor: Medium] [Time Horizon: Long-term Planning]*

3.1. The UVLS Program resolves the identified undervoltage issues for which the UVLS Program is designed.

3.2. The UVLS Program is integrated through coordination with generator voltage ride-through capabilities and other protection and control systems, including, but not limited to, transmission line protection, autoreclosing, Remedial Action Schemes, and other undervoltage-based load shedding programs.

M3. Acceptable evidence may include, but is not limited to, date-stamped reports or other documentation detailing the assessment of the UVLS Program.

Rationale for Requirement R4: Refer to the Supplemental Section at the end of the document for the rationale.

R4. Each Planning Coordinator or Transmission Planner shall, within 12 calendar months of an event that resulted in a voltage excursion for which its UVLS Program was designed to operate, perform an assessment to evaluate: *[Violation Risk Factor: Medium] [Time Horizon: Operations Planning]*

4.1. Whether its UVLS Program resolved the undervoltage issues associated with the event, and

4.2. The performance (i.e., operation and non-operation) of the UVLS Program equipment.

M4. Acceptable evidence may include, but is not limited to, date-stamped event data, event analysis reports, or other documentation detailing the assessment of the UVLS Program and associated equipment.

R5. Each Planning Coordinator or Transmission Planner that identifies deficiencies during an assessment performed in either Requirement R3 or R4 shall develop a Corrective Action Plan to address the deficiencies and subsequently provide the Corrective Action Plan, including an implementation schedule, to UVLS entities within three

calendar months of completing the assessment. *[Violation Risk Factor: Medium] [Time Horizon: Operations Planning]*

M5. Acceptable evidence must include a date-stamped Corrective Action Plan that addresses identified deficiencies and may also include date-stamped reports or other documentation supporting the Corrective Action Plan. Evidence should also include date-stamped communications showing that the Corrective Action Plan and an associated implementation schedule were provided to UVLS entities.

R6. Each Planning Coordinator that has a UVLS Program in its area shall update a database containing data necessary to model the UVLS Program(s) in its area for use in event analyses and assessments of the UVLS Program at least once each calendar year. *[Violation Risk Factor: Lower] [Time Horizon: Operations Planning]*

M6. Acceptable evidence may include, but is not limited to, date-stamped spreadsheets, database reports, or other documentation demonstrating a UVLS Program database was updated.

R7. Each UVLS entity shall provide data to its Planning Coordinator according to the format and schedule specified by the Planning Coordinator to support maintenance of a UVLS Program database. *[Violation Risk Factor: Lower] [Time Horizon: Operations Planning]*

M7. Acceptable evidence may include, but is not limited to, date-stamped emails, letters, or other documentation demonstrating data was provided to the Planning Coordinator as specified.

R8. Each Planning Coordinator that has a UVLS Program in its area shall provide its UVLS Program database to other Planning Coordinators and Transmission Planners within its Interconnection, and other functional entities with a reliability need, within 30 calendar days of a written request. *[Violation Risk Factor: Lower] [Time Horizon: Operations Planning]*

M8. Acceptable evidence may include, but is not limited to, date-stamped emails, letters, or other documentation demonstrating that the UVLS Program database was provided within 30 calendar days of receipt of a written request.

C. Compliance

1. Compliance Monitoring Process

1.1. Compliance Enforcement Authority

As defined in the NERC Rules of Procedure, “Compliance Enforcement Authority” means NERC or the Regional Entity in their respective roles of monitoring and enforcing compliance with the NERC Reliability Standards.

1.2. Evidence Retention

The following evidence retention periods identify the period of time an entity is required to retain specific evidence to demonstrate compliance. For instances

where the evidence retention period specified below is shorter than the time since the last audit, the Compliance Enforcement Authority may ask an entity to provide other evidence to show that it was compliant for the full-time period since the last audit.

The Planning Coordinator, Transmission Planner, Distribution Provider, and Transmission Owner shall keep data or evidence to show compliance as identified below unless directed by its Compliance Enforcement Authority to retain specific evidence for a longer period of time as part of an investigation.

The applicable entity shall retain documentation as evidence for six calendar years.

If an applicable entity is found non-compliant, it shall keep information related to the non-compliance until mitigation is complete and approved, or for the time specified above, whichever is longer.

The Compliance Enforcement Authority shall keep the last audit records and all requested and submitted subsequent audit records.

1.3. Compliance Monitoring and Assessment Processes

"Compliance Monitoring and Assessment Processes" refers to the identification of the processes that will be used to evaluate data or information for the purpose of assessing performance or outcomes with the associated reliability standard.

1.4. Additional Compliance Information

None.

Table of Compliance Elements

R #	Time Horizon	VRF	Violation Severity Levels			
			Lower VSL	Moderate VSL	High VSL	Severe VSL
R1	Long-term Planning	High	N/A	N/A	N/A	The applicable entity that developed the UVLS Program failed to evaluate the program's effectiveness and subsequently provide the UVLS Program's specifications and implementation schedule to UVLS entities in accordance with Requirement R1, including the items specified in Parts 1.1 and 1.2.

R #	Time Horizon	VRF	Violation Severity Levels			
			Lower VSL	Moderate VSL	High VSL	Severe VSL
R2	Long-term Planning	High	N/A	N/A	The applicable entity failed to adhere to the UVLS Program specifications in accordance with Requirement R2. OR The applicable entity failed to adhere to the implementation schedule in accordance with Requirement R2.	The applicable entity failed to adhere to the UVLS Program specifications and implementation schedule in accordance with Requirement R2.
R3	Long-term Planning	Medium	N/A	N/A	N/A	The applicable entity failed to perform an assessment at least once during the 60 calendar months in accordance with Requirement R3, including the items specified in Parts 3.1 and 3.2.

R #	Time Horizon	VRF	Violation Severity Levels			
			Lower VSL	Moderate VSL	High VSL	Severe VSL
R4	Operations Planning	Medium	The applicable entity performed an assessment in accordance with Requirement R4 within a time period greater than 12 calendar months but less than or equal to 13 calendar months after an applicable event.	The applicable entity performed an assessment in accordance with Requirement R4 within a time period greater than 13 calendar months but less than or equal to 14 calendar months after an applicable event.	The applicable entity performed an assessment in accordance with Requirement R4 within a time period greater than 14 calendar months but less than or equal to 15 calendar months after an applicable event.	The applicable entity performed an assessment in accordance with Requirement R4 within a time period greater than 15 calendar months after an applicable event. OR The applicable entity failed to perform an assessment in accordance with Requirement R4.

R #	Time Horizon	VRF	Violation Severity Levels			
			Lower VSL	Moderate VSL	High VSL	Severe VSL
R5	Operations Planning	Medium	The applicable entity developed a Corrective Action Plan and provided it to UVLS entities in accordance with Requirement R5 but was late by less than or equal to 15 calendar days.	The applicable entity developed a Corrective Action Plan and provided it to UVLS entities in accordance with Requirement R5 but was late by more than 15 calendar days but less than or equal to 30 calendar days.	The applicable entity developed a Corrective Action Plan and provided it to UVLS entities in accordance with Requirement R5 but was late by more than 30 calendar days but less than or equal to 45 calendar days.	The applicable entity developed a Corrective Action Plan and provided it to UVLS entities in accordance with Requirement R5 but was late by more than 45 calendar days. OR The responsible entity failed to develop a Corrective Action Plan or provide it to UVLS entities in accordance with Requirement R5.

R #	Time Horizon	VRF	Violation Severity Levels			
			Lower VSL	Moderate VSL	High VSL	Severe VSL
R6	Operations Planning	Lower	The applicable entity updated the database in accordance with Requirement R6 but was late by less than or equal to 30 calendar days.	The applicable entity updated the database in accordance with Requirement R6 but was late by more than 30 calendar days but less than or equal to 60 calendar days.	The applicable entity updated the database in accordance with Requirement R6 but was late by more than 60 calendar days but less than or equal to 90 calendar days.	The applicable entity updated the database in accordance with Requirement R6 but was late by more than 90 calendar days. OR The applicable entity failed to update the database in accordance with Requirement R6.

R #	Time Horizon	VRF	Violation Severity Levels			
			Lower VSL	Moderate VSL	High VSL	Severe VSL
R7	Operations Planning	Lower	The applicable entity provided data in accordance with Requirement R7 but was late by less than or equal to 30 calendar days per the specified schedule. OR The applicable entity provided data in accordance with Requirement R7 but the data was not provided according to the specified format.	The applicable entity provided data in accordance with Requirement R7 but was late by more than 30 calendar days but less than or equal to 60 calendar days per the specified schedule.	The applicable entity provided data in accordance with Requirement R7 but was late by more than 60 calendar days but less than or equal to 90 calendar days per the specified schedule.	The applicable entity provided data in accordance with Requirement R7 but was late by more than 90 calendar days per the specified schedule. OR The applicable entity failed to provide data in accordance with Requirement R7.

R #	Time Horizon	VRF	Violation Severity Levels			
			Lower VSL	Moderate VSL	High VSL	Severe VSL
R8	Operations Planning	Lower	The applicable entity provided its UVLS Program database in accordance with Requirement R8 but was late by less than or equal to 15 calendar days.	The applicable entity provided its UVLS Program database in accordance with Requirement R8 but was late by more than 15 calendar days but less than or equal to 30 calendar days.	The applicable entity provided its UVLS Program database in accordance with Requirement R8 but was late by more than 30 calendar days but less than or equal to 45 calendar days.	The applicable entity provided its UVLS Program database in accordance with Requirement R8 but was late by more than 45 calendar days. OR The applicable entity failed to provide its UVLS Program database in accordance with Requirement R8.

D. Regional Variances

None.

E. Interpretations

None.

F. Associated Documents

None.

Version History

Version	Date	Action	Change Tracking
0	February 8, 2005	Adopted by NERC Board of Trustees	
0	April 1, 2005	Effective Date	
0	February 7, 2013	Adopted by NERC Board of Trustees	R2 and associated elements for retirement as part of the Paragraph 81 project (Project 2013-02) pending applicable regulatory approval.
1	November 13, 2014	Adopted by NERC Board of Trustees	Revisions made under Project 2008-02: Undervoltage Load Shedding (UVLS) & Underfrequency Load Shedding (UFLS) to address directive issued in FERC Order No. 763.
2		Adopted by NERC Board of Trustees	Revisions made under Project 2008-02.2: Undervoltage Load Shedding (UVLS): Misoperation to include UVLS equipment.

Guidelines and Technical Basis

Introduction

The standard drafting team provides the following discussion to support the approach to the standard. The information is meant to enhance the understanding of the reliability needs and deliverable expectations of each requirement, supported as necessary by technical principles and industry experience.

Guidelines for UVLS Program Definition

The definition for the term, “Undervoltage Load Shedding Program” or “UVLS Program” includes automatic load shedding programs that utilize only voltage inputs at locations where action is taken to shed load. As such, the failure of a single component is unlikely to affect the reliable operation of the program.

The UVLS Program definition excludes centrally controlled undervoltage-based load shedding, which utilizes inputs from multiple locations and may also utilize inputs other than voltages (such as generator reactive reserves, facility loadings, equipment statuses, etc.). The design and characteristics of a centrally controlled undervoltage-based load shedding system are the same as that of a Remedial Action Scheme (RAS), wherein load shedding is the remedial action. Therefore, just like for a RAS, the failure of a single component can compromise the reliable operation of centrally controlled undervoltage-based load shedding.

To ensure that the applicability of the standard includes only those undervoltage-based load shedding systems whose performance has an impact on system reliability, a UVLS Program must mitigate risk of one or more of the following: voltage instability, voltage collapse, or Cascading impacting the Bulk Electric System (BES). An example of a program that would not fall under this category is undervoltage-based load shedding installed to mitigate damage to equipment or local loads that are directly affected by the low voltage event.

Figure 1 below is an example of a BES subsystem for which a UVLS system could be used as a solution to mitigate various issues following the loss of the 345 kV double circuit line between buses A and B. If the consequence of this Contingency does not impact the BES by leading to voltage instability, voltage collapse, or Cascading, a UVLS system (installed at either, or both, bus B and D) used to mitigate this Contingency would not fall under the definition of a UVLS Program. However, if this same UVLS system is used to mitigate an Adverse Reliability Impact outside this contained area, it would be classified as a wide-area undervoltage problem and would fall under the definition of UVLS Program.

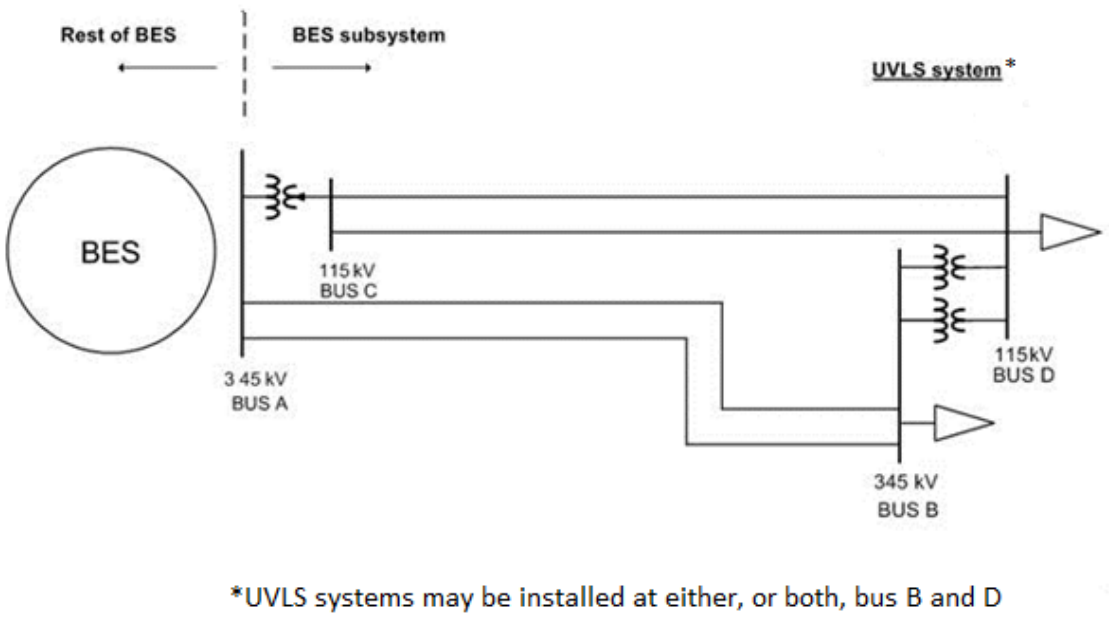

Figure 1: UVLS Subsystem

Guidelines for Requirements

Table 1 provides a high-level overview of the requirements contained in the standard.

Table 1: High-Level Requirement Overview

Requirement	Entity	Evaluate Program Effectiveness	Adhere to Program Specifications and Schedule	Perform Program Assessment (Periodic or Performance)	Develop a CAP to Address Program Deficiencies	Update and/or Share Program Data
R1	PC or TP	X				
R2	UVLS entity		X			
R3	PC or TP	X		X		
R4	PC or TP	X		X		
R5	PC or TP				X	
R6	PC					X
R7	UVLS entity					X
R8	PC					X

Guidelines for Requirement R1

A UVLS Program may be developed and implemented to either serve as a safety net system protection measure against unforeseen extreme Contingencies or to achieve specific system

performance for known transmission Contingencies for which dropping of load is allowed under Transmission Planning (TPL) Reliability Standards. Regardless of the purpose, it is important that the UVLS Program being implemented is effective in terms that it mitigates undervoltage conditions impacting the Bulk Electric System (BES), leading to voltage instability, voltage collapse, or Cascading. Consideration should be given to voltage set points and time delays, rate of voltage decay or recovery, power flow levels, etc. when designing a UVLS Program.

For the UVLS Program to be effective in achieving its goal, it is also necessary that the UVLS Program is coordinated with generator voltage ride-through capabilities and other protection and control systems that may have an impact on the performance of the UVLS Program. Some of these protection and control systems may include, but are not limited to, transmission line protection, RAS, other undervoltage-based load shedding programs, autoreclosing, and controls of shunt capacitors, reactors, and static voltampere-reactive systems (SVSs).

For example, if the purpose of a UVLS Program is to mitigate fault-induced delayed voltage recovery (FIDVR) events in a large load center that also includes local generation, it is important that such a UVLS Program is coordinated with local generators' voltage ride-through capabilities. Generators in the vicinity of a load center are critical to providing dynamic voltage support to the system during FIDVR events. To maximize the benefit of on-line generation, the best practice may be to shed load prior to generation trip. However, occasionally, it may be best to let generation trip prior to load shed. Therefore, the impact of generation tripping should be considered while designing a UVLS Program.

Another example that can be highlighted is the coordination of a UVLS Program with automatic shunt reactor tripping devices if there are any on the system. Most likely, any shunt reactors on the system will trip off automatically after some time delay during low voltage conditions. In such cases, shunt reactors should be tripped before the load is shed to preserve the system. This may require coordination of time delays associated with the UVLS Program with shunt reactor tripping devices.

The examples given above demonstrate that, for a UVLS Program to be effective, proper consideration should be given to coordination of a UVLS Program with generator ride-through capabilities and other protection and control systems.

Guidelines for Requirement R2

Once a Planning Coordinator (PC) or Transmission Planner (TP) has identified a need for a UVLS Program, the Planning Coordinator or Transmission Planner will develop a program that includes specifications and an implementation schedule, which are then provided to UVLS entities per Requirement R1. Specifications may include voltage set points, time delays, amount of load to be shed, and the location at which load needs to be shed. If UVLS entities do not implement the UVLS Program according to the specifications and schedule provided, the UVLS Program may not be effective and may not achieve its intended goal. The UVLS entity must document that all necessary actions were completed to implement the UVLS Program.

Similarly, when a Corrective Action Plan (CAP) to address UVLS Program deficiencies is developed by the Planning Coordinator or Transmission Planner and provided to UVLS entities per Requirement R5, UVLS entities must comply with the CAP and its associated implementation schedule to ensure that the UVLS Program is effective. The UVLS entity is required to complete the actions specified in the CAP, document the plan implementation, and retain the appropriate evidence to demonstrate implementation and completion.

Deferrals or other relevant changes to the UVLS Program specifications or CAP need to be documented so that the record includes not only what was planned, but what was implemented. Depending on the planning and documentation format used by the responsible entity, evidence of a successful execution could consist of signed-off work orders, printouts from work management systems, spreadsheets of planned versus completed work, timesheets, work inspection reports, paid invoices, photographs, walk-through reports, or other evidence.

For example, documentation of a CAP provides an auditable progress and completion confirmation for the identified UVLS Program deficiency:

CAP Example 1 - Corrective actions for a quick triggering problem; preemptive actions for similar installations:

The PC or TP obtains fault records from a UVLS entity that participates in its UVLS Program that indicate a group of UVLS relays triggered at the appropriate undervoltage level but with shorter delays than expected. The PC or TP directed the UVLS entity to schedule on-site inspections within three weeks. The results of the inspection confirmed that the delay-time programmed on the relays was 60 cycles instead of 90 cycles. The PC or TP then directed the UVLS entity to correct to a 90-cycle time delay setting of the UVLS relays identified to have shorter time delay settings within eight weeks.

Applicability to other UVLS relays: The PC or TP then developed a schedule with the UVLS entity to verify and adjust all remaining UVLS relays time delay settings within a one-year period.

The PC or TP verified completion of verification and adjustment of the time delay settings for all of the UVLS entity's equipment that participates in the PC or TP UVLS Program

CAP Example 2 - Corrective actions for a firmware problem; preemptive actions for similar installations:

The PC or TP obtains fault records on 6/4/2014 from a UVLS entity that participates in its UVLS Program. The UVLS entity also provided the fault records to the manufacturer, who responded on 6/11/2014 that the Misoperation[2] of the UVLS relay was caused by a bug in version 2 firmware, and recommended installing version 3 firmware. The PC or TP approved the UVLS entity's plan to schedule Version 3 firmware installation on 6/12/2014.

[2] Misoperation of Protection Systems reporting was initiated by the NERC Board of Trustees adopted NERC Rules of Procedure, Section 1600, Request for Data or Information. Refer to: *Request for Data of Information, Protection System Misoperation Data Collection*, August 14, 2014. http://www.nerc.com/pa/RAPA/ProctectionSystem Misoperations/PRC-004-3%20Section%201600%20Data%20Request_20140729.pdf.

Applicability to other UVLS relays: The PC or TP then developed a schedule with the UVLS entity to install firmware version 3 at all of the UVLS entity's UVLS relays that are determined to be programmed with version 2 firmware. The completion date was scheduled no-later-than 12/31/2014.

The firmware replacements were completed on 12/4/2014.

Guidelines for Requirement R3

In addition to the initial studies required to develop a UVLS Program, periodic comprehensive assessments (detailed analyses) are required to ensure its continued effectiveness. This assessment is required to be completed at least once every 60 calendar months to capture the accumulated effects of minor changes to the system that have occurred since the last assessment was completed. However, at any point in time, a Planning Coordinator or Transmission Planner may also determine that a material change[3] to system topology or operating conditions affects the performance of the UVLS Program and therefore necessitates the same comprehensive assessment. Regardless of the trigger, each assessment should include an evaluation of each UVLS Program to ensure the continued integration through coordination.

This comprehensive assessment complements the TPL-001-4 annual assessment requirement to evaluate the impact of protection systems. The 60-month period is the same time frame used in TPL-001-4 and in PRC-006-1.

As specified in Requirement R3, a comprehensive assessment must be performed at least once every 60 calendar months. If a Planning Coordinator or Transmission Planner conducts a comprehensive assessment sooner for the reasons discussed above, the 60-month time period would restart upon completion of this assessment.

Guidelines for Requirement R4

After a voltage excursion event, the goal of the assessment required in Requirement R4 is to evaluate: (1) whether the UVLS Program resolved the undervoltage issues, and (2) the performance of the UVLS Program equipment. The assessment should include event data analysis, such as the relevant sequence of events leading to the undervoltage conditions (e.g., Contingencies, operation of protection systems, and RAS) and field measurements useful to analyzing the behavior of the system. A comprehensive description of the UVLS Program operation should be presented, including conditions of the trigger (e.g., voltage levels, time delays) and amount of load shed for each affected substation. Assessment of the event is performed to evaluate the level of performance of the program for the event of interest and to identify deficiencies to be included in a CAP per Requirement R5. Misoperation of UVLS equipment is addressed as a deficiency. Reporting of UVLS equipment Misoperations are

[3] It is understood that the term material change is not transportable on a continent-wide basis. This determination must be made by the Planning Coordinator or Transmission Planner and should be accompanied by documentation to support the technical rationale for determining material changes.

addressed by the NERC *Request for Data and Information, Protection System Misoperation Data Collection*.[4]

The studies and analyses showing the effectiveness of the UVLS Program can be similar to what is required in Requirements R1 and R3, but should include a clear link between the evaluation of effectiveness (in studies using simulations) and the analysis of the event (with measurements and event data) that actually occurred. For example, differences between the expected and actual system behavior for the event of interest should be discussed and modeling assumptions should be evaluated. Important discrepancies between the simulations and the actual event should be investigated.

Considering the importance of an event that involves the operation of a UVLS Program, the 12-calendar-month period provides adequate time to analyze the event and perform an assessment while identifying deficiencies within a reasonable time. This time period is also required in PRC-006-1.

Guidelines for Requirement R5

Requirement R5 promotes the prudent correction of an identified problem during the assessment of a UVLS Program. Per Requirements R3 and R4, an assessment of an active UVLS Program is triggered:

- Within 12 calendar months of an event that resulted in a voltage excursion for which the program was designed to operate
- At least once every 60 calendar months. The default time frame of 60 calendar months or less between assessments has the intention to assure that the cumulative changes to the network and operating condition affecting the UVLS Program are evaluated

Since every UVLS is unique, if material changes are made to system topology or operating conditions, the Planning Coordinator or Transmission Planner will decide the degree to which the change in topology or operating condition becomes a material change sufficient to trigger an assessment of the existing UVLS Program.

A CAP is a list of actions and an associated timetable for implementation to remedy a specific problem. It is a proven tool for resolving operational problems. Per Requirement R5, the Planning Coordinator or Transmission Planner is required to develop a CAP and provide it to UVLS entities to accomplish the purpose of this requirement, which is to prevent future deficiencies in the UVLS Program, thereby minimizing risk to the system. Determining the cause of the deficiency is essential in developing an effective CAP to avoid future re-occurrence of the same problem. A CAP can be revised if additional causes are found.

Based on industry experience and operational coordination timeframes, three calendar months from the date an assessment is completed is a reasonable time frame for development of a CAP, including time to consider alternative solutions and coordination of resources. The “within three

[4] Id.

calendar months" time frame is solely to develop a CAP, including its implementation schedule, and provide it to UVLS entities. It does not include the time needed for its implementation by UVLS entities. This implementation time frame is dictated within the CAP's associated timetable for implementation, and the execution of the CAP according to its schedule is required in Requirement R2.

Guidelines for Requirements R6–R8

An accurate UVLS Program database is necessary for the Planning Coordinator or Transmission Planner to perform system reliability assessment studies and event analysis studies. Without accurate data, there is a possibility that annual reliability assessment studies that are performed by the Planning Coordinator or Transmission Planner can lead to erroneous results and therefore impact reliability. Also, without the accurate data, it is very difficult for the Planning Coordinator or Transmission Planner to duplicate a UVLS event and determine the root cause of the problem.

To support a UVLS Program database, it is necessary for each UVLS entity to provide accurate data to its Planning Coordinator. Each UVLS entity will provide the data according to the specified format and schedule provided by the Planning Coordinator. This is required in order for the Planning Coordinator to maintain and support a comprehensive UVLS Program database. By having a comprehensive database, the Planning Coordinator can embark on a reliability assessment or event analysis/benchmarking studies, identify the issues with the UVLS Program, and develop Corrective Action Plans.

The UVLS Program database may include, but is not limited to the following:

- Owner and operator of the UVLS Program
- Size and location of customer load, or percent of connected load, to be interrupted
- Corresponding voltage set points and clearing times
- Time delay from initiation to trip signal
- Breaker operating times
- Any other schemes that are part of or impact the UVLS Programs, such as related generation protection, islanding schemes, automatic load restoration schemes, underfrequency load shedding (UFLS), and RAS

Additionally, the UVLS Program database is required to be updated annually (once every calendar year) by the Planning Coordinator. The intent here is for UVLS entities to review the data annually and provide changes to the Planning Coordinators so that Planning Coordinators can keep the databases current and accurate for performing event analysis and other assessments.

Finally, a Planning Coordinator is required to provide information to other Planning Coordinators and Transmission Planners within its Interconnection, and other functional entities with a reliability need, within 30 calendar days of receipt of a written request. Thirty calendar days was selected as the time frame as it is considered to be reasonable and well- accepted by the industry. Also, this requirement of sharing the database with applicable functional entities supports the

directive provided by FERC that requires an integrated and coordinated approach to UVLS programs (Paragraph 1509 of FERC Order No. 693).

Rationale

During development of this standard, text boxes were embedded within the standard to explain the rationale for various parts of the standard. Upon BOT approval, the text from the rationale text boxes was moved to this section.

Rationale for Applicability

This standard is applicable to Planning Coordinators and Transmission Planners that have or are developing a UVLS Program, and to Distribution Providers and Transmission Owners responsible for the ownership, operation, or control of UVLS equipment as required by the UVLS Program established by the Transmission Planner or Planning Coordinator. These Distribution Providers and Transmission Owners are referred to as UVLS entities for the purpose of this standard.

The applicability includes both the Planning Coordinator and Transmission Planner because either may be responsible for designing and coordinating the program based on agreements, memorandums of understanding, or tariffs.

The phrase "Planning Coordinator or Transmission Planner" provides the latitude for applicability to the entity that will perform the action. The expectation is not that both parties will perform the action, but rather that the Planning Coordinator and Transmission Planner will engage in discussion to determine the appropriate responsible entity.

Rationale for R1

In Paragraph 1509 from Order No. 693, FERC directed NERC to require an integrated and coordinated approach to all protection systems. The drafting team agrees that a lack of coordination among protection systems is a key risk to reliability, and that each Planning Coordinator or Transmission Planner that develops a UVLS Program should evaluate the program's viability and effectiveness prior to implementation. This evaluation should include studies and analyses used when developing the program that show implementation of the program resolves the identified undervoltage conditions that led to its design. These studies and analyses should also show that the UVLS Program is integrated through coordination with generator voltage ride-through capabilities and other protection and control systems. Though presented as separate items, the drafting team recognizes that the studies that show coordination considerations and that the program addresses undervoltage issues may be interrelated and presented as one comprehensive analysis.

In addition, Requirement R1 also requires the Planning Coordinator or Transmission Planner to provide the UVLS Program's specifications and implementation schedule to applicable UVLS entities to implement the program. It is noted that studies to evaluate the effectiveness of the program should be completed prior to providing the specifications and schedule.

Rationale for R2

UVLS entities must implement a UVLS Program or address any necessary corrective actions for a UVLS Program according to the specifications and schedule provided by the Planning Coordinator or Transmission Planner. If UVLS entities do not implement the UVLS Program according to the specifications and schedule provided, the UVLS Program may not be effective and may not achieve its intended goal.

Rationale for R3

A periodic comprehensive assessment (detailed analysis) should be conducted to identify and catalogue the accumulated effects of minor changes to the system that have occurred since the last assessment was completed, and should include an evaluation of each UVLS Program to ensure the continued integration through coordination. This comprehensive assessment supplements the NERC Reliability Standard TPL-001-4 annual assessment requirement to evaluate the impact of protection systems.

Based on the drafting team's knowledge and experience, and in keeping with time frames contained in similar requirements from other PRC Reliability Standards, 60 calendar months was determined to be the maximum amount of time allowable between assessments. Assessments will be performed sooner than the end of the 60-calendar month period if the Planning Coordinator or Transmission Planner determines that there are material changes to system topology or operating conditions that affect the performance of a UVLS Program. Note that the 60-calendar-month time frame would reset after each assessment.

Rationale for R4

A UVLS Program not functioning as expected during a voltage excursion event for which the UVLS Program was designed to operate presents a critical risk to system reliability. Therefore, a timely assessment to evaluate (1) whether the UVLS Program resolved the undervoltage issues and (2) the performance of the UVLS Program equipment associated with the applicable event is essential. The 12 calendar months (from the date of the event) provides adequate time to coordinate with other Planning Coordinators, Transmission Planners, Transmission Operators, and UVLS entities, simulate pre- and post-event conditions, and complete the performance assessment.

Rationale for R5

If program deficiencies are identified during an assessment performed in either Requirement R3 or R4, the Planning Coordinator or Transmission Planner must develop a Corrective Action Plan (CAP) to address the deficiencies. Based on the drafting team's knowledge and experience with UVLS studies, three calendar months was determined to provide a judicious balance between the reliability need to address deficiencies expeditiously and the time needed to consider potential

solutions, coordinate resources, develop a CAP and implementation schedule, and provide the CAP and schedule to UVLS entities.

It is noted that the three-month time frame is only to develop the CAP and provide it to UVLS entities and does not encompass the time UVLS entities have to implement the CAP. Requirement R2 requires UVLS entities to execute the CAP according to the schedule provided by the Planning Coordinator or Transmission Planner.

Rationale for R6

Having accurate and current data is required for the Planning Coordinator to perform undervoltage studies and for use in event analyses. Requirement R6 supports this reliability need by requiring the Planning Coordinator to update its UVLS Program database at least once each calendar year.

Rationale for R7

Having accurate and current data is required for the Planning Coordinator to perform undervoltage studies and for use in event analyses. Requirement R7 supports this reliability need by requiring the UVLS entity to provide UVLS Program data in accordance with specified parameters.

Rationale for R8

Requirement R8 supports the integrated and coordinated approach to UVLS programs directed by Paragraph 1509 of Order No. 693 by requiring that UVLS Program data be shared with neighboring Planning Coordinators and Transmission Planners within a reasonable time period. Requests for the database should also be fulfilled for those functional entities that have a reliability need for the data (such as the Transmission Operators that develop System Operating Limits and Reliability Coordinators that develop Interconnection Reliability Operating Limits).

Frequently Asked Questions

To succinctly address common comment themes that require drafting team response on Project 2008-02 UVLS (proposed PRC-010-1), the drafting team provides the following discussion in the construct of an FAQ format.

Introduction

This Frequently Asked Questions (FAQ) document was created during the development of PRC-010-1 (*Undervoltage Load Shedding*)[5,6] to succinctly address common comment themes with respect to the approach and intent of the Project 2008-02 Undervoltage Load Shedding (UVLS)[7] standard drafting team ("drafting team"). This FAQ document is the outcome of comments received during comment periods and multiple outreach sessions with industry. All comments submitted by industry during comment periods may be reviewed on the project page.

Subsequent to the adoption of PRC-010-1, the UVLS drafting team made minor revisions to the standard address the UVLS Misoperation identification and correction.[8] This FAQ document was amended to reflect up the approach and intent of the drafting team during the development of PRC-010-2 concerning Misoperation of UVLS equipment.

Purpose of Standard Revision

1) What is the basis for a revision of the existing UVLS standards?

The initial input into a revision of the existing UVLS standards is FERC Order No. 693,[9] Paragraph 1509, which directed the ERO to develop a modification of PRC-010-0 that "requires that an integrated and coordinated approach be included in all protection systems on the Bulk-Power System, including generators and transmission lines, generators' low voltage ride through capabilities, and UFLS and UVLS programs." In addition, *The Final Report on the August 14, 2003 Blackout in the United States and Canada: Causes and Recommendations*[10] ("August 14 Blackout Report") showed that proper coordination would have mitigated effects if UVLS was used as a tool.

Additional inputs included 1) recommendations from the NERC System Protection and Control Subcommittee (SPCS) in its December 2010 *Technical Review of UVLS-Related Standards*[11] to combine the four existing UVLS standards, revise the applicability to entities responsible for UVLS program design, implementation, and coordination, specifically include a requirement for

[5] (http://www.nerc.com/_layouts/PrintStandard.aspx?standardnumber=PRC-010-1&title=Undervoltage%20Load%20Shedding).
[6] Adopted by the NERC Board of Trustees on November 14, 2014.
[7] (http://www.nerc.com/pa/Stand/Pages/Project-2008-02-Undervoltage-Load-Shedding.aspx).
[8] Refer to Project 2010-05.1, which developed PRC-004-3 (Protection System Misoperation Identification and Correction) concurrently with the development of PRC-010-1. (http://www.nerc.com/pa/Stand/Pages/Project2010-05_Protection_System_Misoperations.aspx).
[9] (http://www.nerc.com/docs/docs/ferc/order_693.pdf).
[10] (http://energy.gov/sites/prod/files/oeprod/DocumentsandMedia/BlackoutFinal-Web.pdf).
[11] (http://www.nerc.com/docs/pc/spctf/PRC-010_022%20Report_Approved_20101208.pdf).

assessment of coordination between UVLS programs and all other protection systems, and differentiate post-event validation of UVLS program design from verifying correct operation of UVLS equipment; 2) the existing UVLS standards were not in the current results-based format; 3) the preceding revision of the underfrequency load shedding (UFLS) standards had similar types of requirements and had been completed under the construct of a consolidation; and 4) the Independent Expert Review Panel recommendations, which included an evaluation of the existing standards' applicability and level of specificity.

The drafting team agrees that a lack of coordination among protection systems is a key risk to reliability. As part of the revision to address this, the drafting team also agreed that an evaluation and consolidation of the existing UVLS standards was necessary to meet current Reliability Standard development initiatives and to provide clear, comprehensive requirements to address the application and coordination of UVLS.

2) UVLS programs are not mandatory—is compliance for an optional tool necessary?

The drafting team asserts that a key takeaway from the August 14 Blackout Report is that coordination of UVLS with other protection systems could have mitigated the effects if UVLS was used as a tool. Although the use of UVLS is not mandatory, if it is determined that this system preservation measure is necessary to support reliability and a UVLS program is installed, the program needs to be properly coordinated, implemented, and assessed due to the inherent associated reliability risks. As such, there needs to be a level of performance required to properly protect system reliability. Of note, PRC-010-1 and PRC-010-2 apply to the defined term "UVLS Program," which limits the standard's applicability to only those undervoltage-based load shedding programs whose performance has an impact on system reliability.[12]

Coordination with Project 2009-03 Emergency Operations

3) EOP-003-2 has potential redundant requirements with proposed PRC-010-1—how is this being addressed?

As part of its five-year review, Project 2009-03 – Emergency Operations (EOP) identified EOP-003-2 (*Load Shedding Plans*),[13] Requirements R2, R4, and R7 as being more properly covered by Project 2008-02 – UVLS. Both projects were strategically coordinated to move in lockstep from a timing perspective to address these requirements. Project 2009-03 – EOP proposed to revise and consolidate EOP-001-2.1b (*Emergency Operations Planning*),[14] EOP-002-3 (Capacity and Energy Emergencies),[15] and EOP-003-2 to create EOP-011-1, will retire the noted EOP-003-2

[12] The term "UVLS Program" used herein was adopted by the NERC Board of Trustees on November 14, 2014.
[13] (http://www.nerc.com/_layouts/PrintStandard.aspx?standardnumber=EOP-003-2&title=Load%20Shedding%20Plans).
[14] (http://www.nerc.com/_layouts/PrintStandard.aspx?standardnumber=EOP-001-2.1b&title=Emergency%20Operations%20Planning).
[15] (http://www.nerc.com/_layouts/PrintStandard.aspx?standardnumber=EOP-002-3&title=Capacity%20and%20Energy%20Emergencies).

requirements (among other revisions), and the Project 2008-02 – UVLS *Mapping Document* will show how PRC-010-1 encompasses the retired content accordingly. Slated to have aligning effective dates, both EOP-011-1 (*Emergency Operations*)[16] and PRC-010-1 will be posted and balloted separately but concurrently, so that industry stakeholders will be able to clearly evaluate the transition. Please see the posted Project 2008-02 UVLS Project Coordination Plan for more information.

"UVLS Program" Definition

4) Why is the introduction of the new defined term "UVLS Program" necessary?

The drafting team found it necessary to introduce the term "UVLS Program" for inclusion in the *Glossary of Terms Used in NERC Reliability Standards*[17] ("NERC Glossary") because different types of UVLS systems need to be treated appropriately with respect to reliability requirements. Therefore, the term establishes which UVLS systems PRC-010-1 will apply to an: "automatic load shedding program consisting of distributed relays and controls used to mitigate undervoltage conditions impacting the Bulk Electric System (BES), leading to voltage instability, voltage collapse, or Cascading. Centrally controlled undervoltage-based load shedding is not included."

The definition excludes locally-applied relays that are designed to protect a contained area or, in other words, are not designed to mitigate wide-area voltage collapse. This exclusion is not explicit in these terms in the enforceable language of the definition since the meaning and measurement of "local" or "wide-area" varies greatly on a continent-wide basis and could potentially be interpreted differently by auditors and the applicable functional entities. Therefore, the definition as written is meant to provide flexibility for the Planning Coordinator or Transmission Planner to determine if a UVLS system falls under the defined term with respect to its impact on the reliability of the BES (voltage instability, voltage collapse, or Cascading). To further support the intended exclusion, further discussion and an example are provided on in the PRC-010-1 and PRC-010-2 Guidelines and Technical Basis section under the heading "Guidelines for UVLS Program Definition."

The definition does explicitly note that the term excludes centrally controlled undervoltage-based load shedding. This type of load shedding is excluded because the drafting team asserts that the design and characteristics of centrally controlled undervoltage-based load shedding are commensurate with those of a Special Protection System (SPS) or Remedial Action Scheme (RAS) and should therefore be subject to SPS or RAS-related Reliability Standards. See PRC-010-1 and PRC-010-2 Guidelines and Technical Basis section under the heading "Guidelines for UVLS Program Definition" for further discussion.

[16] (http://www.nerc.com/_layouts/PrintStandard.aspx?standardnumber=EOP-011-1&title=Emergency%20Operations).
[17] (http://www.nerc.com/pa/Stand/Glossary%20of%20Terms/Glossary_of_Terms.pdf).

5) If the definition excludes certain types of UVLS, does this preclude an "integrated" approach (FERC Order No. 693, Paragraph 1509)?

The defined term "UVLS Program" clarifies which UVLS systems are subject to the requirements in PRC-010-1 and PRC-010-2. The resulting exclusions from these versions of the standard do not preclude an "integrated" approach because the standard requires that an entity coordinate with all other protection and control systems as necessary, which may include other types of UVLS (i.e., locally-applied UVLS relays and centrally controlled undervoltage-based load shedding).

6) Where will centrally controlled undervoltage-based load shedding be covered?

As explained immediately above, the Requirements of PRC-010-1 and PRC-010-2 are applicable to the proposed NERC Glossary term "UVLS Program," which excludes centrally controlled undervoltage-based load shedding because its design and characteristics are commensurate with those of an SPS or RAS. However, the NERC Glossary during the development of PRC-010-1 definition of "Special Protection System" excluded UVLS. Therefore, the work under Project 2010-05.2 – Special Protection Systems (Phase 2 of Protection Systems) combined the NERC Glossary definition of "Special Protection System" into the single term "Remedial Action Scheme."[18] The definition revisions specifically excluded UVLS Programs, therefore including centrally controlled undervoltage-based shedding.

Consequently, the introduction of the term "UVLS Program" and the conforming revision to the term "Remedial Action Scheme" explicitly clarifies that RAS-related standards are applicable to centrally controlled undervoltage-based load shedding. The implementation plan for the revised definition of "Remedial Action Scheme" will address entities that will have newly identified RAS resulting from the application of the defined term.

Similar to the coordination effort with Project 2009-03 – EOP explained above, Project 2008-02 – UVLS and Project 2010-05.2 – SPS were coordinated to ensure that the effective dates of the adopted definitions of "Remedial Action Scheme" and "UVLS Program," the PRC-010-1 and PRC-010-1 Reliability Standards, and all associated retirements align.

7) Is the term "UVLS Program" inclusive of a collection of independent UVLS relays?

No; multiple independent relays do not constitute a program. While the definition stipulates that a UVLS Program consists of distributed relays and controls, the definition specifies that it must be "[a]n automatic load shedding program, consisting of distributed relays and controls, used to mitigate undervoltage conditions impacting the Bulk Electric System(BES), leading to voltage instability, voltage collapse, or Cascading. Centrally controlled undervoltage-based load shedding is not included."

[18] Adopted by the NERC Board of Trustees on November 14, 2014.

Applicability

8) What is meant by the phrase "Planning Coordinator or Transmission Planner"?

The PRC-010-1 and PRC-010-2 Reliability Standards are applicable to both the Planning Coordinator and Transmission Planner because either may be responsible for designing and coordinating the program based on agreements, memorandums of understanding, or tariffs. The phrase "Planning Coordinator or Transmission Planner" provides the flexibility for applicability to the entity that will perform the action. The expectation is not that both parties will perform the action, but rather that the Planning Coordinator and Transmission Planner will engage in discussion to determine the appropriate responsible entity. In addition, the requirements containing this phrase have specific language to qualify the responsible entity. For example, Requirement R1 states: "Each Planning Coordinator or Transmission Planner *that is developing* a UVLS Program shall . . ." This language provides clarity that the applicable entity would be the one that is developing the program.

9) Why is the Transmission Operator not included?

While the Transmission Operator may be involved with UVLS Program activities, the drafting team did not identify any required performance for the Transmission Operator that was necessary to capture within PRC-010-1 and PRC-010-2, since the Transmission Operator does not have the resources necessary to implement program specifications. If responsibilities are delegated to the Transmission Operator by the Transmission Owner, the Transmission Owner is still the accountable party.

To the extent that the Transmission Operator is required to have knowledge of system relays and protection systems, the drafting team notes that this requirement is covered under PRC-001-1.1 (*System Protection Coordination*),[19] Requirement R1. It is also noted that manual load shedding, for which the Transmission Operator is responsible, is not in the purview of PRC-010-1 and PRC-010-2, as it is covered under current EOP-003-2 and will subsequently be covered by proposed EOP-011-1 (see Project 2009-03 – Emergency Operations).

10) What about UVLS schemes owned by Transmission Owners, Distribution Providers, or Transmission Operators that are not required by the planner?

The PRC-010-1 and PRC-010-2 Reliability Standards are applicable to the term "UVLS Program." The drafting team notes that, by its defining attributes, a UVLS Program would be required and developed by a Planning Coordinator or Transmission Planner. The nature of a UVLS scheme developed or required by a Distribution Provider, Transmission Operator, or Transmission Owner

[19] http://www.nerc.com/_layouts/PrintStandard.aspx?standardnumber=PRC-001-1.1&title=System%20Protection%20Coordination.

would not meet the attributes of the defined term and would therefore not have the design and characteristics necessary to be subject to the requirements of PRC-010-1 and PRC-010-2.

Requirements R1, R3, R4, and R5

11) What is required to evaluate the coordination referenced in Requirement R1, part 1.2?

Requirement R1 requires each Planning Coordinator or Transmission Planner that develops a UVLS Program to evaluate the program's viability and effectiveness prior to implementation. This evaluation should include studies and analyses used when developing the program that show implementation of the program resolves the identified undervoltage issues that led to its design. These studies and analyses should also show that the UVLS Program is integrated through coordination with generator voltage ride-through capabilities and other protection and control systems. As such, the requirement is meant to provide flexibility for an entity to make the proper determinations, including the considerations for coordination, with respect to program effectiveness based on system characteristics. For further guidance on and examples of coordination considerations, please see the portion of the Guidelines and Technical Basis section under the Requirement R1 heading.

12) Requirements R1, R3, and R4 seem to all require evaluations of program effectiveness—how are they different?

Requirements R1, R3, and R4 do require evaluations of program effectiveness, but they are each at distinct points in time.

Requirement R1 requires evaluation of program effectiveness (by way of the qualifying parts) at the onset of program development, or during the initial planning stage, prior to implementation. Requirement R3 requires the same objectives of an evaluation of effectiveness, but at the point of a mandatory periodic review (at least once every 60 calendar months). Requirement R4 addresses the performance of a UVLS Program after an event (for applicable voltage excursion) to evaluate whether the UVLS Program resolved the undervoltage issues associated with the event.

It is noted that, because of the separate activities of each requirement, UVLS Program deficiencies found as a result of the assessments performed in Requirement R3 or R4 would not be violations of Requirement R1.

13) Requirement R4 would require the Planning Coordinator or Transmission Planner to review all voltage excursions—isn't this unduly burdensome?

While Requirement R4 essentially requires the Planning Coordinator or Transmission Planner to review all voltage excursions to see if they fall below the initializing set points of the UVLS Program, the drafting team contends that it will be clearly evident if voltage falls below the UVLS

threshold because either a) UVLS devices will operate; or b) the system will experience the adverse conditions the UVLS Program was installed to mitigate.

In addition, the drafting team acknowledges that the Planning Coordinator or Transmission Planner may not have the ability to know when voltage excursions are occurring since they are not operating entities. However, a process for the Transmission Operator, Transmission Owner, or Distribution Provider to notify the Transmission Planner or Planning Coordinator of such voltage excursion events is consistent with standard utility practice.

14) PRC-022-1 required the analysis of UVLS Misoperations. How is this addressed in PRC-010-1?

One of the recommendations in the SPCS report was to clearly differentiate between the post-event process of validating the effectiveness of the UVLS program design, its coordination with other protection and control systems, and the potential need to modify the program design (activities addressed in PRC-010-1) and the process of verifying correct operation of UVLS equipment. Because PRC-010-1 was not specific concerning the Misoperation of UVLS equipment, the drafting team made a subsequent revision creating PRC-010-2. Version two (PRC-010-2) now requires that the assessment according to Requirement R4 include the performance (i.e., operation or non-operation) of the UVLS Program equipment.

Relative to the assessment, Requirement R5 requires that a Corrective Action Plan be developed to address any identified deficiencies. This structure ensures that UVLS Program equipment is assessed to identify any Misoperation which could affect BES reliability. Although, the UVLS drafting team maintained during development of PRC-010-1 that verifying correct operation of UVLS equipment should be addressed in PRC-004, the drafting team included UVLS that is intended to trip one or more BES Elements in the proposed PRC-004-5.

Requirements R6, R7, and R8

15) Do Requirements R6, R7, and R8 overlap with the requirements of MOD-032-1?

While both MOD-032-1 (*Data for Power System Modeling and Analysis*)[20] and Requirements R6, R7, and R8 of PRC-010-1 and PRC-010-2 address data requirements, MOD-032-1 establishes overarching modeling data requirements with respect to consistency in format and reporting procedures, whereas the PRC-010-1 and PRC-010-2 requirements address the need to maintain and share data and databases for the purposes of studies for use in event analyses for UVLS Programs specifically. While Reliability Standards in general may have overlap in this manner, the activities in these requirements remain distinctly different.

[20] (http://www.nerc.com/_layouts/PrintStandard.aspx?standardnumber=MOD-032-1&title=Data%20for%20Power%20System%20Modeling%20and%20Analysis).

16) Requirements R6, R7, and R8 appear to be administrative — doesn't this conflict with Paragraph 81 criteria?[21]

Proper maintenance and timely sharing of UVLS Program data as required by Requirements R6, R7, and R8 is necessary to inform the Planning Coordinator or Transmission Planner's studies and analyses. While administrative tasks are required, the tasks have a core reliability-based need.

In addition, Requirements R6, R7, and R8 were written to emulate FERC-approved PRC-006-2 (*Automatic Underfrequency Load Shedding*)[22,23] data requirements. While some of these analogous requirements in PRC-006-2 are listed as candidates for Phase 2 of the Paragraph 81 project, they are not yet approved as meeting the criteria; furthermore, the Independent Expert Review Panel has recommended that these Paragraph 81 candidates not be included for deletion, citing that "there should be a clear expectation for Planning Coordinators to share data necessary to determine their UFLS program parameters."

[21] Refer to Standards Independent Expert Review Project (IERP). (http://www.nerc.com/pa/Stand/Standard%20Development%20Plan/Standards_Independent_Experts_Review_Project_Report-SOTC_and_Board.pdf).
[22] (http://www.nerc.com/_layouts/PrintStandard.aspx?standardnumber=PRC-006-2&title=Automatic%20Underfrequency%20Load%20Shedding).
[23] Adopted by the NERC Board of Trustees on November 14, 2014.

Standard Development Timeline

This section is maintained by the drafting team during the development of the standard and will be removed when the standard becomes effective.

Development Steps Completed

1. The NERC Board of Trustees ("Board") adopted PRC-004-4 and PRC-010-1 and retired PRC-022-1 on November 13, 2014.
2. The NERC Standards Committee authorized the initial posting of the standard on February 18, 2015.
3. Draft 1 of PRC-010-2 was posted for a 45-day formal comment period from February 20 – April 7, 2015 and an initial ballot in the last ten days of the comment period from March 27 – April 7, 2015.

Description of Current Draft

The UVLSSDT is posting Draft ~~1~~2 of PRC-010-2 – Undervoltage Load Shedding for a ~~45~~10-day ~~initial formal comment period and concurrent/parallel initial~~final ballot ~~in the last ten days of the comment period. The draft contains revisions to Requirements R4 and R5 to address UVLS equipment~~.

Anticipated Actions	Date
45-day formal comment period with ballot	February 2015
10-day final ballot	April 2015
Board adoption	May 2015

Project Development Background

The undervoltage load shedding (UVLS) standard drafting team (SDT) was tasked with addressing Misoperation of UVLS equipment during the development of version one of PRC-010 and version three of PRC-004 in Project 2010-05.1 (i.e., Misoperation). This project has been named phase 2 of Project 2008-02 (i.e., UVLS) for clarity purposes. Each SDT for these two projects outlined work necessary to address Misoperation of UVLS equipment. This work was deferred, at the time, because both PRC-010-1 and PRC-004-3 contained dependencies with other projects requiring their completion. This phase two is a continuation of the work performed under the Standards Authorization Request (SAR) for Project 2008-02.

The revisions proposed in Reliability Standard PRC-010-2 meet the following objectives:

- Address the UVLS Misoperation the remaining work due to the retirement of PRC-022-1

(Undervoltage Load Shedding Program Performance) during the development of PRC-010-1 (Undervoltage Load Shedding)

- Ensure the performance of the UVLS equipment (i.e., operation or non-operation) within the UVLS Program is assessed and, if necessary, mitigated

Basis for Revision

Originally, Misoperation of UVLS equipment was planned to be appended to a future version of PRC-004 (Protection System Misoperation Identification and Correction). The SDT is proposing a two-prong approach by revising both PRC-004 and PRC-010 to address the concern of identifying Misoperations of UVLS equipment in PRC-022-1.

First, the SDT proposes an addition to the Applicability section of PRC-004 to include UVLS that is intended to trip one or more Bulk Electric System (BES) Elements. This is consistent with previous communication to industry about addressing Misoperation of UVLS equipment.[1] Entities will be required to address UVLS that trips a BES Element similarly to other Protection Systems in PRC-004. While the revision to PRC-004 consistent with the communicated approach, the SDT determined that the proposed revision fails to address the performance (operation or non-operations) of UVLS Program equipment not covered by the strict processes of PRC-004.

Second, the SDT is proposing clarifying revisions in PRC-010-2, Requirements R4 and R5 to address UVLS Program equipment performance. These revisions are not requiring UVLS entities to address UVLS protective relays not covered by the strict processes of PRC-004; however, PRC-010-2 is requiring UVLS entities to address the deficiencies (e.g., Misoperations) identified in the assessment performed by Planning Coordinator or Transmission Planner in Requirement R4. Deficiencies include the performance (operation or non-operation) issues of UVLS Program equipment. These deficiencies, if any, are addressed by the UVLS entities through a Corrective Action Plan (CAP) developed in Requirement R5 and executed by the UVLS entities in Requirement R2 of PRC-010.

The term “Misoperation” as defined by the Glossary of Terms Used in NERC Reliability Standards is not used within the Requirements of PRC-010; however, the term is used in the Guidelines and Technical Basis section of the standard to provide clarity that UVLS Program equipment deficiencies include Misoperations that are to be corrected by UVLS entities. The PRC-010-2 Reliability Standard mandates that UVLS entities are to correct the deficiencies identified by the Planning Coordinator or Transmission Planner, such as Misoperation of UVLS equipment. Deficiencies are identified through either the periodic assessment or an assessment performed following an event and included in a CAP to the UVLS entity. The structure used by the SDT allows the Planning Coordinator and Transmission Planner to assess UVLS equipment for Misoperation under PRC-010 rather than the Generator Owner, Transmission Owner, and Distribution Provider applicable to the strict processes of PRC-004.

[1] Refer to Implementation Plan for PRC-010-1 (http://www.nerc.com/pa/stand/Pages/PRC0101RI.aspx) and PRC-010-1 (http://www.nerc.com/pa/Stand/Pages/ReliabilityStandards.aspx), Introduction in the Guidelines and Technical Basis, last paragraph.

The two-pronged approach ensures that any UVLS Program equipment containing a deficiency is identified and corrected under PRC-010 and UVLS that trips a BES Element ~~under~~ is corrected under PRC-004 to address the requirements in the retired PRC-022-1.

When this standard receives Board adoption, the rationale boxes in the Supplemental Material section of the standard will remain. The rationale box for Requirement ~~R5~~R4 will be removed.

A. Introduction

1. **Title:** Undervoltage Load Shedding

2. **Number:** PRC-010-2

3. **Purpose:** To establish an integrated and coordinated approach to the design, evaluation, and reliable operation of Undervoltage Load Shedding Programs (UVLS Programs).

4. **Applicability:**

   4.1. Functional Entities:

   4.1.1 Planning Coordinator.

   4.1.2 Transmission Planner.

   4.1.3 Undervoltage load shedding (UVLS) entities – Distribution Providers and Transmission Owners responsible for the ownership, operation, or control of UVLS equipment as required by the UVLS Program established by the Transmission Planner or Planning Coordinator.

5. **Effective Date:** See Project 2008-02.2 Implementation Plan.

B. Requirements and Measures

R1. Each Planning Coordinator or Transmission Planner that is developing a UVLS Program shall evaluate its effectiveness and subsequently provide the UVLS Program's specifications and implementation schedule to the UVLS entities responsible for implementing the UVLS Program. The evaluation shall include, but is not limited to, studies and analyses that show: *[Violation Risk Factor: High] [Time Horizon: Long-term Planning]*

1.1. The implementation of the UVLS Program resolves the identified undervoltage issues that led to its development and design.

1.2. The UVLS Program is integrated through coordination with generator voltage ride-through capabilities and other protection and control systems, including, but not limited to, transmission line protection, autoreclosing, Remedial Action Schemes, and other undervoltage-based load shedding programs.

M1. Acceptable evidence may include, but is not limited to, date-stamped studies and analyses, reports, or other documentation detailing the effectiveness of the UVLS Program, and date-stamped communications showing that the UVLS Program specifications and implementation schedule were provided to UVLS entities.

R2. Each UVLS entity shall adhere to the UVLS Program specifications and implementation schedule determined by its Planning Coordinator or Transmission Planner associated

with UVLS Program development per Requirement R1 or with any Corrective Action Plans per Requirement R5. *[Violation Risk Factor: High] [Time Horizon: Long-term Planning]*

M2. Acceptable evidence must include date-stamped documentation on the completion of actions and may include, but is not limited to, identifying the equipment armed with UVLS relays, the UVLS relay settings, associated Load summaries, work management program records, work orders, and maintenance records.

R3. Each Planning Coordinator or Transmission Planner shall perform a comprehensive assessment to evaluate the effectiveness of each of its UVLS Programs at least once every 60 calendar months. Each assessment shall include, but is not limited to, studies and analyses that evaluate whether: *[Violation Risk Factor: Medium] [Time Horizon: Long-term Planning]*

3.1. The UVLS Program resolves the identified undervoltage issues for which the UVLS Program is designed.

3.2. The UVLS Program is integrated through coordination with generator voltage ride-through capabilities and other protection and control systems, including, but not limited to, transmission line protection, autoreclosing, Remedial Action Schemes, and other undervoltage-based load shedding programs.

M3. Acceptable evidence may include, but is not limited to, date-stamped reports or other documentation detailing the assessment of the UVLS Program.

Rationale for Requirement R4: Refer to the Supplemental Section at the end of the document for the rationale.

R4. Each Planning Coordinator or Transmission Planner shall, within 12 calendar months of an event that resulted in a voltage excursion for which its UVLS Program was designed to operate, perform an assessment to evaluate: *[Violation Risk Factor: Medium] [Time Horizon: Operations Planning]*

4.1. Whether its UVLS Program resolved the undervoltage issues associated with the event, and

4.2. The performance (i.e., operation and non-operation) of the UVLS Program equipment.

M4. Acceptable evidence may include, but is not limited to, date-stamped event data, event analysis reports, or other documentation detailing the assessment of the UVLS Program and associated equipment.

R5. Each Planning Coordinator or Transmission Planner that identifies deficiencies during an assessment performed in either Requirement R3 or R4 shall develop a Corrective Action Plan to address the deficiencies and subsequently provide the Corrective Action Plan, including an implementation schedule, to UVLS entities within three

calendar months of completing the assessment. *[Violation Risk Factor: Medium] [Time Horizon: Operations Planning]*

M5. Acceptable evidence must include a date-stamped Corrective Action Plan that addresses identified deficiencies and may also include date-stamped reports or other documentation supporting the Corrective Action Plan. Evidence should also include date-stamped communications showing that the Corrective Action Plan and an associated implementation schedule were provided to UVLS entities.

R6. Each Planning Coordinator that has a UVLS Program in its area shall update a database containing data necessary to model the UVLS Program(s) in its area for use in event analyses and assessments of the UVLS Program at least once each calendar year. *[Violation Risk Factor: Lower] [Time Horizon: Operations Planning]*

M6. Acceptable evidence may include, but is not limited to, date-stamped spreadsheets, database reports, or other documentation demonstrating a UVLS Program database was updated.

R7. Each UVLS entity shall provide data to its Planning Coordinator according to the format and schedule specified by the Planning Coordinator to support maintenance of a UVLS Program database. *[Violation Risk Factor: Lower] [Time Horizon: Operations Planning]*

M7. Acceptable evidence may include, but is not limited to, date-stamped emails, letters, or other documentation demonstrating data was provided to the Planning Coordinator as specified.

R8. Each Planning Coordinator that has a UVLS Program in its area shall provide its UVLS Program database to other Planning Coordinators and Transmission Planners within its Interconnection, and other functional entities with a reliability need, within 30 calendar days of a written request. *[Violation Risk Factor: Lower] [Time Horizon: Operations Planning]*

M8. Acceptable evidence may include, but is not limited to, date-stamped emails, letters, or other documentation demonstrating that the UVLS Program database was provided within 30 calendar days of receipt of a written request.

C. Compliance

1. Compliance Monitoring Process

1.1. Compliance Enforcement Authority

As defined in the NERC Rules of Procedure, "Compliance Enforcement Authority" means NERC or the Regional Entity in their respective roles of monitoring and enforcing compliance with the NERC Reliability Standards.

1.2. Evidence Retention

The following evidence retention periods identify the period of time an entity is required to retain specific evidence to demonstrate compliance. For instances

where the evidence retention period specified below is shorter than the time since the last audit, the Compliance Enforcement Authority may ask an entity to provide other evidence to show that it was compliant for the full-time period since the last audit.

The Planning Coordinator, Transmission Planner, Distribution Provider, and Transmission Owner shall keep data or evidence to show compliance as identified below unless directed by its Compliance Enforcement Authority to retain specific evidence for a longer period of time as part of an investigation.

The applicable entity shall retain documentation as evidence for six calendar years.

If an applicable entity is found non-compliant, it shall keep information related to the non-compliance until mitigation is complete and approved, or for the time specified above, whichever is longer.

The Compliance Enforcement Authority shall keep the last audit records and all requested and submitted subsequent audit records.

1.3. Compliance Monitoring and Assessment Processes~~:~~

"Compliance Monitoring and Assessment Processes" refers to the identification of the processes that will be used to evaluate data or information for the purpose of assessing performance or outcomes with the associated reliability standard.

1.4. Additional Compliance Information

None.

Table of Compliance Elements

R #	Time Horizon	VRF	Violation Severity Levels			
			Lower VSL	Moderate VSL	High VSL	Severe VSL
R1	Long-term Planning	High	N/A	N/A	N/A	The applicable entity that developed the UVLS Program failed to evaluate the program's effectiveness and subsequently provide the UVLS Program's specifications and implementation schedule to UVLS entities in accordance with Requirement R1, including the items specified in Parts 1.1 and 1.2.

R #	Time Horizon	VRF	Violation Severity Levels			
			Lower VSL	Moderate VSL	High VSL	Severe VSL
R2	Long-term Planning	High	N/A	N/A	The applicable entity failed to adhere to the UVLS Program specifications in accordance with Requirement R2. OR The applicable entity failed to adhere to the implementation schedule in accordance with Requirement R2.	The applicable entity failed to adhere to the UVLS Program specifications and implementation schedule in accordance with Requirement R2.
R3	Long-term Planning	Medium	N/A	N/A	N/A	The applicable entity failed to perform an assessment at least once during the 60 calendar months in accordance with Requirement R3, including the items specified in Parts 3.1 and 3.2.

R #	Time Horizon	VRF	Violation Severity Levels			
			Lower VSL	Moderate VSL	High VSL	Severe VSL
R4	Operations Planning	Medium	The applicable entity performed an assessment in accordance with Requirement R4 within a time period greater than 12 calendar months but less than or equal to 13 calendar months after an applicable event.	The applicable entity performed an assessment in accordance with Requirement R4 within a time period greater than 13 calendar months but less than or equal to 14 calendar months after an applicable event.	The applicable entity performed an assessment in accordance with Requirement R4 within a time period greater than 14 calendar months but less than or equal to 15 calendar months after an applicable event.	The applicable entity performed an assessment in accordance with Requirement R4 within a time period greater than 15 calendar months after an applicable event. OR The applicable entity failed to perform an assessment in accordance with Requirement R4.

R #	Time Horizon	VRF	Violation Severity Levels			
			Lower VSL	Moderate VSL	High VSL	Severe VSL
R5	Operations Planning	Medium	The applicable entity developed a Corrective Action Plan and provided it to UVLS entities in accordance with Requirement R5 but was late by less than or equal to 15 calendar days.	The applicable entity developed a Corrective Action Plan and provided it to UVLS entities in accordance with Requirement R5 but was late by more than 15 calendar days but less than or equal to 30 calendar days.	The applicable entity developed a Corrective Action Plan and provided it to UVLS entities in accordance with Requirement R5 but was late by more than 30 calendar days but less than or equal to 45 calendar days.	The applicable entity developed a Corrective Action Plan and provided it to UVLS entities in accordance with Requirement R5 but was late by more than 45 calendar days. OR The responsible entity failed to develop a Corrective Action Plan or provide it to UVLS entities in accordance with Requirement R5.

R #	Time Horizon	VRF	Violation Severity Levels			
			Lower VSL	Moderate VSL	High VSL	Severe VSL
R6	Operations Planning	Lower	The applicable entity updated the database in accordance with Requirement R6 but was late by less than or equal to 30 calendar days.	The applicable entity updated the database in accordance with Requirement R6 but was late by more than 30 calendar days but less than or equal to 60 calendar days.	The applicable entity updated the database in accordance with Requirement R6 but was late by more than 60 calendar days but less than or equal to 90 calendar days.	The applicable entity updated the database in accordance with Requirement R6 but was late by more than 90 calendar days. OR The applicable entity failed to update the database in accordance with Requirement R6.

R #	Time Horizon	VRF	Violation Severity Levels			
			Lower VSL	Moderate VSL	High VSL	Severe VSL
R7	Operations Planning	Lower	The applicable entity provided data in accordance with Requirement R7 but was late by less than or equal to 30 calendar days per the specified schedule. OR The applicable entity provided data in accordance with Requirement R7 but the data was not provided according to the specified format.	The applicable entity provided data in accordance with Requirement R7 but was late by more than 30 calendar days but less than or equal to 60 calendar days per the specified schedule.	The applicable entity provided data in accordance with Requirement R7 but was late by more than 60 calendar days but less than or equal to 90 calendar days per the specified schedule.	The applicable entity provided data in accordance with Requirement R7 but was late by more than 90 calendar days per the specified schedule. OR The applicable entity failed to provide data in accordance with Requirement R7.

R #	Time Horizon	VRF	Violation Severity Levels			
			Lower VSL	Moderate VSL	High VSL	Severe VSL
R8	Operations Planning	Lower	The applicable entity provided its UVLS Program database in accordance with Requirement R8 but was late by less than or equal to 15 calendar days.	The applicable entity provided its UVLS Program database in accordance with Requirement R8 but was late by more than 15 calendar days but less than or equal to 30 calendar days.	The applicable entity provided its UVLS Program database in accordance with Requirement R8 but was late by more than 30 calendar days but less than or equal to 45 calendar days.	The applicable entity provided its UVLS Program database in accordance with Requirement R8 but was late by more than 45 calendar days. OR The applicable entity failed to provide its UVLS Program database in accordance with Requirement R8.

D. Regional Variances

None.

E. Interpretations

None.

F. Associated Documents

None.

Version History

Version	Date	Action	Change Tracking
0	February 8, 2005	Adopted by NERC Board of Trustees	
0	April 1, 2005	Effective Date	
0	February 7, 2013	Adopted by NERC Board of Trustees	R2 and associated elements for retirement as part of the Paragraph 81 project (Project 2013-02) pending applicable regulatory approval.
1	November 13, 2014	Adopted by NERC Board of Trustees	Revisions made under Project 2008-02: Undervoltage Load Shedding (UVLS) & Underfrequency Load Shedding (UFLS) to address directive issued in FERC Order No. 763.
2		Adopted by NERC Board of Trustees	Revisions made under Project 2008-02.2: Undervoltage Load Shedding (UVLS): Misoperation to include UVLS equipment.

Guidelines and Technical Basis

Introduction

The standard drafting team provides the following discussion to support the approach to the standard. The information is meant to enhance the understanding of the reliability needs and deliverable expectations of each requirement, supported as necessary by technical principles and industry experience.

Guidelines for UVLS Program Definition

The definition for the term, "Undervoltage Load Shedding Program" or "UVLS Program" includes automatic load shedding programs that utilize only voltage inputs at locations where action is taken to shed load. As such, the failure of a single component is unlikely to affect the reliable operation of the program.

The UVLS Program definition excludes centrally controlled undervoltage-based load shedding, which utilizes inputs from multiple locations and may also utilize inputs other than voltages (such as generator reactive reserves, facility loadings, equipment statuses, etc.). The design and characteristics of a centrally controlled undervoltage-based load shedding system are the same as that of a Remedial Action Scheme (RAS), wherein load shedding is the remedial action. Therefore, just like for a RAS, the failure of a single component can compromise the reliable operation of centrally controlled undervoltage-based load shedding.

To ensure that the applicability of the standard includes only those undervoltage-based load shedding systems whose performance has an impact on system reliability, a UVLS Program must mitigate risk of one or more of the following: voltage instability, voltage collapse, or Cascading impacting the Bulk Electric System (BES). An example of a program that would not fall under this category is undervoltage-based load shedding installed to mitigate damage to equipment or local loads that are directly affected by the low voltage event.

Figure 1 below is an example of a BES subsystem for which a UVLS system could be used as a solution to mitigate various issues following the loss of the 345 kV double circuit line between buses A and B. If the consequence of this Contingency does not impact the BES by leading to voltage instability, voltage collapse, or Cascading, a UVLS system (installed at either, or both, bus B and D) used to mitigate this Contingency would not fall under the definition of a UVLS Program. However, if this same UVLS system is used to mitigate an Adverse Reliability Impact outside this contained area, it would be classified as a wide-area undervoltage problem and would fall under the definition of UVLS Program.

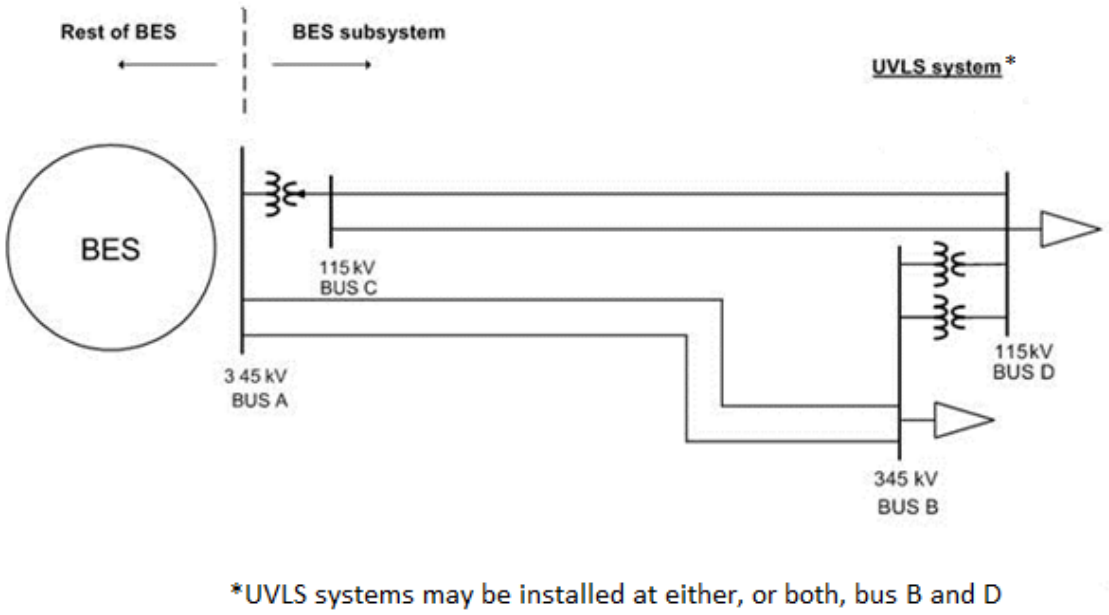

Figure 1: UVLS Subsystem

Guidelines for Requirements

Table 1 provides a high-level overview of the requirements contained in the standard.

Table 1: High-Level Requirement Overview

Requirement	Entity	Evaluate Program Effectiveness	Adhere to Program Specifications and Schedule	Perform Program Assessment (Periodic or Performance)	Develop a CAP to Address Program Deficiencies	Update and/or Share Program Data
R1	PC or TP	X				
R2	UVLS entity		X			
R3	PC or TP	X		X		
R4	PC or TP	X		X		
R5	PC or TP				X	
R6	PC					X
R7	UVLS entity					X
R8	PC					X

Guidelines for Requirement R1

A UVLS Program may be developed and implemented to either serve as a safety net system protection measure against unforeseen extreme Contingencies or to achieve specific system

performance for known transmission Contingencies for which dropping of load is allowed under Transmission Planning (TPL) Reliability Standards. Regardless of the purpose, it is important that the UVLS Program being implemented is effective in terms that it mitigates undervoltage conditions impacting the Bulk Electric System (BES), leading to voltage instability, voltage collapse, or Cascading. Consideration should be given to voltage set points and time delays, rate of voltage decay or recovery, power flow levels, etc. when designing a UVLS Program.

For the UVLS Program to be effective in achieving its goal, it is also necessary that the UVLS Program is coordinated with generator voltage ride-through capabilities and other protection and control systems that may have an impact on the performance of the UVLS Program. Some of these protection and control systems may include, but are not limited to, transmission line protection, RAS, other undervoltage-based load shedding programs, autoreclosing, and controls of shunt capacitors, reactors, and static voltampere-reactive systems (SVSs).

For example, if the purpose of a UVLS Program is to mitigate fault-induced delayed voltage recovery (FIDVR) events in a large load center that also includes local generation, it is important that such a UVLS Program is coordinated with local generators' voltage ride-through capabilities. Generators in the vicinity of a load center are critical to providing dynamic voltage support to the system during FIDVR events. To maximize the benefit of on-line generation, the best practice may be to shed load prior to generation trip. However, occasionally, it may be best to let generation trip prior to load shed. Therefore, the impact of generation tripping should be considered while designing a UVLS Program.

Another example that can be highlighted is the coordination of a UVLS Program with automatic shunt reactor tripping devices if there are any on the system. Most likely, any shunt reactors on the system will trip off automatically after some time delay during low voltage conditions. In such cases, shunt reactors should be tripped before the load is shed to preserve the system. This may require coordination of time delays associated with the UVLS Program with shunt reactor tripping devices.

The examples given above demonstrate that, for a UVLS Program to be effective, proper consideration should be given to coordination of a UVLS Program with generator ride-through capabilities and other protection and control systems.

Guidelines for Requirement R2

Once a Planning Coordinator (PC) or Transmission Planner (TP) has identified a need for a UVLS Program, the Planning Coordinator or Transmission Planner will develop a program that includes specifications and an implementation schedule, which are then provided to UVLS entities per Requirement R1. Specifications may include voltage set points, time delays, amount of load to be shed, and the location at which load needs to be shed. If UVLS entities do not implement the UVLS Program according to the specifications and schedule provided, the UVLS Program may not be effective and may not achieve its intended goal. The UVLS entity must document that all necessary actions were completed to implement the UVLS Program.

Similarly, when a Corrective Action Plan (CAP) to address UVLS Program deficiencies is developed by the Planning Coordinator or Transmission Planner and provided to UVLS entities per Requirement R5, UVLS entities must comply with the CAP and its associated implementation schedule to ensure that the UVLS Program is effective. The UVLS entity is required to complete the actions specified in the CAP, document the plan implementation, and retain the appropriate evidence to demonstrate implementation and completion.

Deferrals or other relevant changes to the UVLS Program specifications or CAP need to be documented so that the record includes not only what was planned, but what was implemented. Depending on the planning and documentation format used by the responsible entity, evidence of a successful execution could consist of signed-off work orders, printouts from work management systems, spreadsheets of planned versus completed work, timesheets, work inspection reports, paid invoices, photographs, walk-through reports, or other evidence.

For example, documentation of a CAP provides an auditable progress and completion confirmation for the identified UVLS Program deficiency:

CAP Example 1 - Corrective actions for a quick triggering problem; preemptive actions for similar installations:

The PC or TP obtains fault records from a UVLS entity that participates in its UVLS Program that indicate a group of UVLS relays triggered at the appropriate undervoltage level but with shorter delays than expected. The PC or TP directed the UVLS entity to schedule on-site inspections within three weeks. The results of the inspection confirmed that the delay-time programmed on the relays was 60 cycles instead of 90 cycles. The PC or TP then directed the UVLS entity to correct to a 90-cycle time delay setting of the UVLS relays identified to have shorter time delay settings within eight weeks.

Applicability to other UVLS relays: The PC or TP then developed a schedule with the UVLS entity to verify and adjust all remaining UVLS relays time delay settings within a one-year period.

The PC or TP verified completion of verification and adjustment of the time delay settings for all of the UVLS entity's equipment that participates in the PC or TP UVLS Program

CAP Example 2 - Corrective actions for a firmware problem; preemptive actions for similar installations:

The PC or TP obtains fault records on 6/4/2014 from a UVLS entity that participates in its UVLS Program. The UVLS entity also provided the fault records to the manufacturer, who responded on 6/11/2014 that the Misoperation[2] of the UVLS relay was caused by a bug in version 2 firmware, and recommended installing version 3 firmware. The PC or TP approved the UVLS entity's plan to schedule Version 3 firmware installation on 6/12/2014.

[2] Misoperation of Protection Systems reporting was initiated by the NERC Board of Trustees adopted NERC Rules of Procedure, Section 1600, Request for Data or Information. Refer to: *Request for Data of Information, Protection System Misoperation Data Collection*, August 14, 2014. http://www.nerc.com/pa/RAPA/ProctectionSystem Misoperations/PRC-004-3%20Section%201600%20Data%20Request_20140729.pdf.

Applicability to other UVLS relays: The PC or TP then developed a schedule with the UVLS entity to install firmware version 3 at all of the UVLS entity's UVLS relays that are determined to be programmed with version 2 firmware. The completion date was scheduled no-later-than 12/31/2014.

The firmware replacements were completed on 12/4/2014.

Guidelines for Requirement R3

In addition to the initial studies required to develop a UVLS Program, periodic comprehensive assessments (detailed analyses) are required to ensure its continued effectiveness. This assessment is required to be completed at least once every 60 calendar months to capture the accumulated effects of minor changes to the system that have occurred since the last assessment was completed. However, at any point in time, a Planning Coordinator or Transmission Planner may also determine that a material change[3] to system topology or operating conditions affects the performance of the UVLS Program and therefore necessitates the same comprehensive assessment. Regardless of the trigger, each assessment should include an evaluation of each UVLS Program to ensure the continued integration through coordination.

This comprehensive assessment complements the TPL-001-4 annual assessment requirement to evaluate the impact of protection systems. The 60-month period is the same time frame used in TPL-001-4 and in PRC-006-1.

As specified in Requirement R3, a comprehensive assessment must be performed at least once every 60 calendar months. If a Planning Coordinator or Transmission Planner conducts a comprehensive assessment sooner for the reasons discussed above, the 60-month time period would restart upon completion of this assessment.

Guidelines for Requirement R4

After a voltage excursion event, the goal of the assessment required in Requirement R4 is to evaluate: (1) whether the UVLS Program resolved the undervoltage issues, and (2) the performance of the UVLS Program equipment. The assessment should include event data analysis, such as the relevant sequence of events leading to the undervoltage conditions (e.g., Contingencies, operation of protection systems, and RAS) and field measurements useful to analyzing the behavior of the system. A comprehensive description of the UVLS Program operation should be presented, including conditions of the trigger (e.g., voltage levels, time delays) and amount of load shed for each affected substation. Assessment of the event is performed to evaluate the level of performance of the program for the event of interest and to identify deficiencies to be included in a CAP per Requirement R5. Misoperation of UVLS equipment is addressed as a deficiency. Reporting of UVLS equipment Misoperations are

[3] It is understood that the term material change is not transportable on a continent-wide basis. This determination must be made by the Planning Coordinator or Transmission Planner and should be accompanied by documentation to support the technical rationale for determining material changes.

addressed by the NERC *Request for Data and Information, Protection System Misoperation Data Collection*.[4]

The studies and analyses showing the effectiveness of the UVLS Program can be similar to what is required in Requirements R1 and R3, but should include a clear link between the evaluation of effectiveness (in studies using simulations) and the analysis of the event (with measurements and event data) that actually occurred. For example, differences between the expected and actual system behavior for the event of interest should be discussed and modeling assumptions should be evaluated. Important discrepancies between the simulations and the actual event should be investigated.

Considering the importance of an event that involves the operation of a UVLS Program, the 12-calendar-month period provides adequate time to analyze the event and perform an assessment while identifying deficiencies within a reasonable time. This time period is also required in PRC-006-1.

Guidelines for Requirement R5~~:~~

Requirement R5 promotes the prudent correction of an identified problem during the assessment of a UVLS Program. Per Requirements R3 and R4, an assessment of an active UVLS Program is triggered:

- Within 12 calendar months of an event that resulted in a voltage excursion for which the program was designed to operate
- At least once every 60 calendar months. The default time frame of 60 calendar months or less between assessments has the intention to assure that the cumulative changes to the network and operating condition affecting the UVLS Program are evaluated

Since every UVLS is unique, if material changes are made to system topology or operating conditions, the Planning Coordinator or Transmission Planner will decide the degree to which the change in topology or operating condition becomes a material change sufficient to trigger an assessment of the existing UVLS Program.

A CAP is a list of actions and an associated timetable for implementation to remedy a specific problem. It is a proven tool for resolving operational problems. Per Requirement R5, the Planning Coordinator or Transmission Planner is required to develop a CAP and provide it to UVLS entities to accomplish the purpose of this requirement, which is to prevent future deficiencies in the UVLS Program, thereby minimizing risk to the system. Determining the cause of the deficiency is essential in developing an effective CAP to avoid future re-occurrence of the same problem. A CAP can be revised if additional causes are found.

Based on industry experience and operational coordination timeframes, three calendar months from the date an assessment is completed is a reasonable time frame for development of a CAP, including time to consider alternative solutions and coordination of resources. The “within three

[4] Id.

calendar months" time frame is solely to develop a CAP, including its implementation schedule, and provide it to UVLS entities. It does not include the time needed for its implementation by UVLS entities. This implementation time frame is dictated within the CAP's associated timetable for implementation, and the execution of the CAP according to its schedule is required in Requirement R2.

Guidelines for Requirements R6–R8

An accurate UVLS Program database is necessary for the Planning Coordinator or Transmission Planner to perform system reliability assessment studies and event analysis studies. Without accurate data, there is a possibility that annual reliability assessment studies that are performed by the Planning Coordinator or Transmission Planner can lead to erroneous results and therefore impact reliability. Also, without the accurate data, it is very difficult for the Planning Coordinator or Transmission Planner to duplicate a UVLS event and determine the root cause of the problem.

To support a UVLS Program database, it is necessary for each UVLS entity to provide accurate data to its Planning Coordinator. Each UVLS entity will provide the data according to the specified format and schedule provided by the Planning Coordinator. This is required in order for the Planning Coordinator to maintain and support a comprehensive UVLS Program database. By having a comprehensive database, the Planning Coordinator can embark on a reliability assessment or event analysis/benchmarking studies, identify the issues with the UVLS Program, and develop Corrective Action Plans.

The UVLS Program database may include, but is not limited to the following:

- Owner and operator of the UVLS Program
- Size and location of customer load, or percent of connected load, to be interrupted
- Corresponding voltage set points and clearing times
- Time delay from initiation to trip signal
- Breaker operating times
- Any other schemes that are part of or impact the UVLS Programs, such as related generation protection, islanding schemes, automatic load restoration schemes, underfrequency load shedding (UFLS), and RAS

Additionally, the UVLS Program database is required to be updated annually (once every calendar year) by the Planning Coordinator. The intent here is for UVLS entities to review the data annually and provide changes to the Planning Coordinators so that Planning Coordinators can keep the databases current and accurate for performing event analysis and other assessments.

Finally, a Planning Coordinator is required to provide information to other Planning Coordinators and Transmission Planners within its Interconnection, and other functional entities with a reliability need, within 30 calendar days of receipt of a written request. Thirty calendar days was selected as the time frame as it is considered to be reasonable and well- accepted by the industry. Also, this requirement of sharing the database with applicable functional entities supports the

directive provided by FERC that requires an integrated and coordinated approach to UVLS programs (Paragraph 1509 of FERC Order No. 693).

Rationale

During development of this standard, text boxes were embedded within the standard to explain the rationale for various parts of the standard. Upon BOT approval, the text from the rationale text boxes was moved to this section.

Rationale for Applicability

This standard is applicable to Planning Coordinators and Transmission Planners that have or are developing a UVLS Program, and to Distribution Providers and Transmission Owners responsible for the ownership, operation, or control of UVLS equipment as required by the UVLS Program established by the Transmission Planner or Planning Coordinator. These Distribution Providers and Transmission Owners are referred to as UVLS entities for the purpose of this standard.

The applicability includes both the Planning Coordinator and Transmission Planner because either may be responsible for designing and coordinating the program based on agreements, memorandums of understanding, or tariffs.

The phrase "Planning Coordinator or Transmission Planner" provides the latitude for applicability to the entity that will perform the action. The expectation is not that both parties will perform the action, but rather that the Planning Coordinator and Transmission Planner will engage in discussion to determine the appropriate responsible entity.

Rationale for R1

In Paragraph 1509 from Order No. 693, FERC directed NERC to require an integrated and coordinated approach to all protection systems. The drafting team agrees that a lack of coordination among protection systems is a key risk to reliability, and that each Planning Coordinator or Transmission Planner that develops a UVLS Program should evaluate the program's viability and effectiveness prior to implementation. This evaluation should include studies and analyses used when developing the program that show implementation of the program resolves the identified undervoltage conditions that led to its design. These studies and analyses should also show that the UVLS Program is integrated through coordination with generator voltage ride-through capabilities and other protection and control systems. Though presented as separate items, the drafting team recognizes that the studies that show coordination considerations and that the program addresses undervoltage issues may be interrelated and presented as one comprehensive analysis.

In addition, Requirement R1 also requires the Planning Coordinator or Transmission Planner to provide the UVLS Program's specifications and implementation schedule to applicable UVLS entities to implement the program. It is noted that studies to evaluate the effectiveness of the program should be completed prior to providing the specifications and schedule.

Rationale for R2

UVLS entities must implement a UVLS Program or address any necessary corrective actions for a UVLS Program according to the specifications and schedule provided by the Planning Coordinator or Transmission Planner. If UVLS entities do not implement the UVLS Program according to the specifications and schedule provided, the UVLS Program may not be effective and may not achieve its intended goal.

Rationale for R3

A periodic comprehensive assessment (detailed analysis) should be conducted to identify and catalogue the accumulated effects of minor changes to the system that have occurred since the last assessment was completed, and should include an evaluation of each UVLS Program to ensure the continued integration through coordination. This comprehensive assessment supplements the NERC Reliability Standard TPL-001-4 annual assessment requirement to evaluate the impact of protection systems.

Based on the drafting team's knowledge and experience, and in keeping with time frames contained in similar requirements from other PRC Reliability Standards, 60 calendar months was determined to be the maximum amount of time allowable between assessments. Assessments will be performed sooner than the end of the 60-calendar month period if the Planning Coordinator or Transmission Planner determines that there are material changes to system topology or operating conditions that affect the performance of a UVLS Program. Note that the 60-calendar-month time frame would reset after each assessment.

Rationale for R4

A UVLS Program not functioning as expected during a voltage excursion event for which the UVLS Program was designed to operate presents a critical risk to system reliability. Therefore, a timely assessment to evaluate (1) whether the UVLS Program resolved the undervoltage issues and (2) the performance of the UVLS Program equipment associated with the applicable event is essential. The 12 calendar months (from the date of the event) provides adequate time to coordinate with other Planning Coordinators, Transmission Planners, Transmission Operators, and UVLS entities, simulate pre- and post-event conditions, and complete the performance assessment.

Rationale for R5

If program deficiencies are identified during an assessment performed in either Requirement R3 or R4, the Planning Coordinator or Transmission Planner must develop a Corrective Action Plan (CAP) to address the deficiencies. Based on the drafting team's knowledge and experience with UVLS studies, three calendar months was determined to provide a judicious balance between the reliability need to address deficiencies expeditiously and the time needed to consider potential

solutions, coordinate resources, develop a CAP and implementation schedule, and provide the CAP and schedule to UVLS entities.

It is noted that the three-month time frame is only to develop the CAP and provide it to UVLS entities and does not encompass the time UVLS entities have to implement the CAP. Requirement R2 requires UVLS entities to execute the CAP according to the schedule provided by the Planning Coordinator or Transmission Planner.

Rationale for R6

Having accurate and current data is required for the Planning Coordinator to perform undervoltage studies and for use in event analyses. Requirement R6 supports this reliability need by requiring the Planning Coordinator to update its UVLS Program database at least once each calendar year.

Rationale for R7

Having accurate and current data is required for the Planning Coordinator to perform undervoltage studies and for use in event analyses. Requirement R7 supports this reliability need by requiring the UVLS entity to provide UVLS Program data in accordance with specified parameters.

Rationale for R8

Requirement R8 supports the integrated and coordinated approach to UVLS programs directed by Paragraph 1509 of Order No. 693 by requiring that UVLS Program data be shared with neighboring Planning Coordinators and Transmission Planners within a reasonable time period. Requests for the database should also be fulfilled for those functional entities that have a reliability need for the data (such as the Transmission Operators that develop System Operating Limits and Reliability Coordinators that develop Interconnection Reliability Operating Limits).

Frequently Asked Questions

To succinctly address common comment themes that require drafting team response on Project 2008-02 UVLS (proposed PRC-010-1), the drafting team provides the following discussion in the construct of an FAQ format.

Introduction

This Frequently Asked Questions (FAQ) document was created during the development of PRC-010-1 (*Undervoltage Load Shedding*)[5,6] to succinctly address common comment themes with respect to the approach and intent of the Project 2008-02 Undervoltage Load Shedding (UVLS)[7] standard drafting team ("drafting team"). This FAQ document is the outcome of comments received during comment periods and multiple outreach sessions with industry. All comments submitted by industry during comment periods may be reviewed on the project page.

Subsequent to the adoption of PRC-010-1, the UVLS drafting team made minor revisions to the standard address the UVLS Misoperation identification and correction.[8] This FAQ document was amended to reflect up the approach and intent of the drafting team during the development of PRC-010-2 concerning Misoperation of UVLS equipment.

Purpose of Standard Revision

1) What is the basis for a revision of the existing UVLS standards?

The initial input into a revision of the existing UVLS standards is FERC Order No. 693,[9] Paragraph 1509, which directed the ERO to develop a modification of PRC-010-0 that "requires that an integrated and coordinated approach be included in all protection systems on the Bulk-Power System, including generators and transmission lines, generators' low voltage ride through capabilities, and UFLS and UVLS programs." In addition, *The Final Report on the August 14, 2003 Blackout in the United States and Canada: Causes and Recommendations*[10] ("August 14 Blackout Report") showed that proper coordination would have mitigated effects if UVLS was used as a tool.

Additional inputs included 1) recommendations from the NERC System Protection and Control Subcommittee (SPCS) in its December 2010 *Technical Review of UVLS-Related Standards*[11] to combine the four existing UVLS standards, revise the applicability to entities responsible for UVLS

[5] (http://www.nerc.com/_layouts/PrintStandard.aspx?standardnumber=PRC-010-1&title=Undervoltage%20Load%20Shedding-).

[6] Adopted by the NERC Board of Trustees on November 14, 2014.

[7] (http://www.nerc.com/pa/Stand/Pages/Project-2008-02-Undervoltage-Load-Shedding.aspx).

[8] Refer to Project 2010-05.1, which developed PRC-004-3 (Protection System Misoperation Identification and Correction) concurrently with the development of PRC-010-1. (http://www.nerc.com/pa/Stand/Pages/Project2010-05_Protection_System_Misoperations.aspx).

[9] (http://www.nerc.com/docs/docs/ferc/order_693.pdf-).

[10] (http://energy.gov/sites/prod/files/oeprod/DocumentsandMedia/BlackoutFinal-Web.pdf-).

[11] (http://www.nerc.com/docs/pc/spctf/PRC-010_022%20Report_Approved_20101208.pdf-).

program design, implementation, and coordination, specifically include a requirement for assessment of coordination between UVLS programs and all other protection systems, and differentiate post-event validation of UVLS program design from verifying correct operation of UVLS equipment; 2) the existing UVLS standards were not in the current results-based format; 3) the preceding revision of the underfrequency load shedding (UFLS) standards had similar types of requirements and had been completed under the construct of a consolidation; and 4) the Independent Expert Review Panel recommendations, which included an evaluation of the existing standards' applicability and level of specificity.

The drafting team agrees that a lack of coordination among protection systems is a key risk to reliability. As part of the revision to address this, the drafting team also agreed that an evaluation and consolidation of the existing UVLS standards was necessary to meet current Reliability Standard development initiatives and to provide clear, comprehensive requirements to address the application and coordination of UVLS.

2) UVLS programs are not mandatory—is compliance for an optional tool necessary?

The drafting team asserts that a key takeaway from the August 14 Blackout Report is that coordination of UVLS with other protection systems could have mitigated the effects if UVLS was used as a tool. Although the use of UVLS is not mandatory, if it is determined that this system preservation measure is necessary to support reliability and a UVLS program is installed, the program needs to be properly coordinated, implemented, and assessed due to the inherent associated reliability risks. As such, there needs to be a level of performance required to properly protect system reliability. Of note, PRC-010-1 and PRC-010-2 apply to the defined term "UVLS Program," which limits the standard's applicability to only those undervoltage-based load shedding programs whose performance has an impact on system reliability.[12]

Coordination with Project 2009-03 Emergency Operations

3) EOP-003-2 has potential redundant requirements with proposed PRC-010-1—how is this being addressed?

As part of its five-year review, Project 2009-03 – Emergency Operations (EOP) identified EOP-003-2 (*Load Shedding Plans*),[13] Requirements R2, R4, and R7 as being more properly covered by Project 2008-02 – UVLS. Both projects were strategically coordinated to move in lockstep from a timing perspective to address these requirements. Project 2009-03 – EOP proposed to revise and consolidate EOP-001-2.1b (*Emergency Operations Planning*),[14] EOP-002-3 (Capacity and Energy

[12] The term "UVLS Program" used herein was adopted by the NERC Board of Trustees on November 14, 2014.

[13] (http://www.nerc.com/_layouts/PrintStandard.aspx?standardnumber=EOP-003-2&title=Load%20Shedding%20Plans-).

[14] (http://www.nerc.com/_layouts/PrintStandard.aspx?standardnumber=EOP-001-2.1b&title=Emergency%20Operations%20Planning-).

Emergencies),[15] and EOP-003-2 to create EOP-011-1, will retire the noted EOP-003-2 requirements (among other revisions), and the Project 2008-02 – UVLS *Mapping Document* will show how PRC-010-1 encompasses the retired content accordingly. Slated to have aligning effective dates, both EOP-011-1 (*Emergency Operations*)[16] and PRC-010-1 will be posted and balloted separately but concurrently, so that industry stakeholders will be able to clearly evaluate the transition. Please see the posted Project 2008-02 UVLS Project Coordination Plan for more information.

"UVLS Program" Definition

4) Why is the introduction of the new defined term "UVLS Program" necessary?

The drafting team found it necessary to introduce the term "UVLS Program" for inclusion in the *Glossary of Terms Used in NERC Reliability Standards*[17] ("NERC Glossary") because different types of UVLS systems need to be treated appropriately with respect to reliability requirements. Therefore, the term establishes which UVLS systems PRC-010-1 will apply to an: "automatic load shedding program consisting of distributed relays and controls used to mitigate undervoltage conditions impacting the Bulk Electric System (BES), leading to voltage instability, voltage collapse, or Cascading. Centrally controlled undervoltage-based load shedding is not included."

The definition ~~is meant to inherently exclude~~excludes locally-applied relays that are designed to protect a contained area or, in other words, are not designed to mitigate wide-area voltage collapse. This exclusion is not explicit in these terms in the enforceable language of the definition since the meaning and measurement of "local" or "wide-area" varies greatly on a continent-wide basis and could potentially be interpreted differently by auditors and the applicable functional entities. Therefore, the definition as written is meant to provide flexibility for the Planning Coordinator or Transmission Planner to determine if a UVLS system falls under the defined term with respect to its impact on the reliability of the BES (voltage instability, voltage collapse, or Cascading). To further support the intended exclusion, further discussion and an example are provided on in the PRC-010-1 and PRC-010-2 Guidelines and Technical Basis section under the heading "Guidelines for UVLS Program Definition."

The definition does explicitly note that the term excludes centrally controlled undervoltage-based load shedding. This type of load shedding is excluded because the drafting team asserts that the design and characteristics of centrally controlled undervoltage-based load shedding are commensurate with those of a Special Protection System (SPS) or Remedial Action Scheme (RAS) and should therefore be subject to SPS or RAS-related Reliability Standards. See PRC-010-1 and PRC-010-2 Guidelines and Technical Basis section under the heading "Guidelines for UVLS Program Definition" for further discussion.

[15] (http://www.nerc.com/_layouts/PrintStandard.aspx?standardnumber=EOP-002-3&title=Capacity%20and%20Energy%20Emergencies~~.~~).

[16] (http://www.nerc.com/_layouts/PrintStandard.aspx?standardnumber=EOP-011-1&title=Emergency%20Operations~~.~~).

[17] (http://www.nerc.com/pa/Stand/Glossary%20of%20Terms/Glossary_of_Terms.pdf~~.~~).

5) If the definition excludes certain types of UVLS, does this preclude an "integrated" approach (FERC Order No. 693, Paragraph 1509)?

The defined term "UVLS Program" clarifies which UVLS systems are subject to the requirements in PRC-010-1 and PRC-010-2. The resulting exclusions from these versions of the standard do not preclude an "integrated" approach because the standard requires that an entity coordinate with all other protection and control systems as necessary, which may include other types of UVLS (i.e., locally-applied UVLS relays and centrally controlled undervoltage-based load shedding).

6) Where will centrally controlled undervoltage-based load shedding be covered?

As explained immediately above, the Requirements of PRC-010-1 and PRC-010-2 are applicable to the proposed NERC Glossary term "UVLS Program," which excludes centrally controlled undervoltage-based load shedding because its design and characteristics are commensurate with those of an SPS or RAS. However, the NERC Glossary during the development of PRC-010-1 definition of "Special Protection System" excluded UVLS. Therefore, the work under Project 2010-05.2 – Special Protection Systems (Phase 2 of Protection Systems) combined the NERC Glossary definition of "Special Protection System" into the single term "Remedial Action Scheme."[18] The definition revisions specifically excluded UVLS Programs, therefore including centrally controlled undervoltage-based shedding.

Consequently, the introduction of the term "UVLS Program" and the conforming revision to the term "Remedial Action Scheme" explicitly clarifies that RAS-related standards are applicable to centrally controlled undervoltage-based load shedding. The implementation plan for the revised definition of "Remedial Action Scheme" will address entities that will have newly identified RAS resulting from the application of the defined term.

Similar to the coordination effort with Project 2009-03 – EOP explained above, Project 2008-02 – UVLS and Project 2010-05.2 – SPS were coordinated to ensure that the effective dates of the adopted definitions of "Remedial Action Scheme" and "UVLS Program," the PRC-010-1 and PRC-010-1 Reliability Standards, and all associated retirements align.

7) Is the term "UVLS Program" inclusive of a collection of independent UVLS relays?

No; multiple independent relays do not constitute a program. While the definition stipulates that a UVLS Program consists of distributed relays and controls, the definition specifies that it must be "[a]n automatic load shedding program, consisting of distributed relays and controls, used to mitigate undervoltage conditions impacting the Bulk Electric System(BES), leading to voltage

[18] Adopted by the NERC Board of Trustees on November 14, 2014.

instability, voltage collapse, or Cascading. Centrally controlled undervoltage-based load shedding is not included."

Applicability

8) What is meant by the phrase "Planning Coordinator or Transmission Planner"?

The PRC-010-1 and PRC-010-2 Reliability Standards are applicable to both the Planning Coordinator and Transmission Planner because either may be responsible for designing and coordinating the program based on agreements, memorandums of understanding, or tariffs. The phrase "Planning Coordinator or Transmission Planner" provides the flexibility for applicability to the entity that will perform the action. The expectation is not that both parties will perform the action, but rather that the Planning Coordinator and Transmission Planner will engage in discussion to determine the appropriate responsible entity. In addition, the requirements containing this phrase have specific language to qualify the responsible entity. For example, Requirement R1 states: "Each Planning Coordinator or Transmission Planner *that is developing* a UVLS Program shall . . ." This language provides clarity that the applicable entity would be the one that is developing the program.

9) Why is the Transmission Operator not included?

While the Transmission Operator may be involved with UVLS Program activities, the drafting team did not identify any required performance for the Transmission Operator that was necessary to capture within PRC-010-1 and PRC-010-2, since the Transmission Operator does not have the resources necessary to implement program specifications. If responsibilities are delegated to the Transmission Operator by the Transmission Owner, the Transmission Owner is still the accountable party.

To the extent that the Transmission Operator is required to have knowledge of system relays and protection systems, the drafting team notes that this requirement is covered under PRC-001-1.1 (*System Protection Coordination*),[19] Requirement R1. It is also noted that manual load shedding, for which the Transmission Operator is responsible, is not in the purview of PRC-010-1 and PRC-010-2, as it is covered under current EOP-003-2 and will subsequently be covered by proposed EOP-011-1 (see Project 2009-03 – Emergency Operations).

10) What about UVLS schemes owned by Transmission Owners, Distribution Providers, or Transmission Operators that are not required by the planner?

The PRC-010-1 and PRC-010-2 Reliability Standards are applicable to the term "UVLS Program." The drafting team notes that, by its defining attributes, a UVLS Program would be required and

[19] http://www.nerc.com/_layouts/PrintStandard.aspx?standardnumber=PRC-001-1.1&title=System%20Protection%20Coordination.

developed by a Planning Coordinator or Transmission Planner. The nature of a UVLS scheme developed or required by a Distribution Provider, Transmission Operator, or Transmission Owner would not meet the attributes of the defined term and would therefore not have the design and characteristics necessary to be subject to the requirements of PRC-010-1 and PRC-010-2.

Requirements R1, R3, R4, and R5

11) What is required to evaluate the coordination referenced in Requirement R1, part 1.2?

Requirement R1 requires each Planning Coordinator or Transmission Planner that develops a UVLS Program to evaluate the program's viability and effectiveness prior to implementation. This evaluation should include studies and analyses used when developing the program that show implementation of the program resolves the identified undervoltage issues that led to its design. These studies and analyses should also show that the UVLS Program is integrated through coordination with generator voltage ride-through capabilities and other protection and control systems. As such, the requirement is meant to provide flexibility for an entity to make the proper determinations, including the considerations for coordination, with respect to program effectiveness based on system characteristics. For further guidance on and examples of coordination considerations, please see the portion of the Guidelines and Technical Basis section under the Requirement R1 heading.

12) Requirements R1, R3, and R4 seem to all require evaluations of program effectiveness—how are they different?

Requirements R1, R3, and R4 do require evaluations of program effectiveness, but they are each at distinct points in time.

Requirement R1 requires evaluation of program effectiveness (by way of the qualifying parts) at the onset of program development, or during the initial planning stage, prior to implementation. Requirement R3 requires the same objectives of an evaluation of effectiveness, but at the point of a mandatory periodic review (at least once every 60 calendar months). Requirement R4 addresses the performance of a UVLS Program after an event (for applicable voltage excursion) to evaluate whether the UVLS Program resolved the undervoltage issues associated with the event.

It is noted that, because of the separate activities of each requirement, UVLS Program deficiencies found as a result of the assessments performed in Requirement R3 or R4 would not be violations of Requirement R1.

13) Requirement R4 would require the Planning Coordinator or Transmission Planner to review all voltage excursions—isn't this unduly burdensome?

While Requirement R4 essentially requires the Planning Coordinator or Transmission Planner to review all voltage excursions to see if they fall below the initializing set points of the UVLS

Program, the drafting team contends that it will be clearly evident if voltage falls below the UVLS threshold because either a) UVLS devices will operate; or b) the system will experience the adverse conditions the UVLS Program was installed to mitigate.

In addition, the drafting team acknowledges that the Planning Coordinator or Transmission Planner may not have the ability to know when voltage excursions are occurring since they are not operating entities. However, a process for the Transmission Operator, Transmission Owner, or Distribution Provider to notify the Transmission Planner or Planning Coordinator of such voltage excursion events is consistent with standard utility practice.

14) PRC-022-1 required the analysis of UVLS Misoperations. How is this addressed in PRC-010-1?

One of the recommendations in the SPCS report was to clearly differentiate between the post-event process of validating the effectiveness of the UVLS program design, its coordination with other protection and control systems, and the potential need to modify the program design (activities addressed in PRC-010-1) and the process of verifying correct operation of UVLS equipment. Because PRC-010-1 was not specific concerning the Misoperation of UVLS equipment, the drafting team made a subsequent revision creating PRC-010-2. Version two (PRC-010-2) now requires that the assessment according to Requirement R4 include the performance (i.e., operation or non-operation) of the UVLS Program equipment.

Relative to the assessment, Requirement R5 requires that a Corrective Action Plan be developed to address any identified deficiencies. This structure ensures that UVLS Program equipment is assessed to identify any Misoperation which could affect BES reliability. Although, the UVLS drafting team maintained during development of PRC-010-1 that verifying correct operation of UVLS equipment should be addressed in PRC-004, the drafting team included UVLS that is intended to trip one or more BES Elements in the proposed PRC-004-5.

Requirements R6, R7, and R8

15) Do Requirements R6, R7, and R8 overlap with the requirements of MOD-032-1?

While both MOD-032-1 (*Data for Power System Modeling and Analysis*)[20] and Requirements R6, R7, and R8 of PRC-010-1 and PRC-010-2 address data requirements, MOD-032-1 establishes overarching modeling data requirements with respect to consistency in format and reporting procedures, whereas the PRC-010-1 and PRC-010-2 requirements address the need to maintain and share data and databases for the purposes of studies for use in event analyses for UVLS Programs specifically. While Reliability Standards in general may have overlap in this manner, the activities in these requirements remain distinctly different.

[20] (http://www.nerc.com/_layouts/PrintStandard.aspx?standardnumber=MOD-032-1&title=Data%20for%20Power%20System%20Modeling%20and%20Analysis-).

16) Requirements R6, R7, and R8 appear to be administrative — doesn't this conflict with Paragraph 81 criteria?[21]

Proper maintenance and timely sharing of UVLS Program data as required by Requirements R6, R7, and R8 is necessary to inform the Planning Coordinator or Transmission Planner's studies and analyses. While administrative tasks are required, the tasks have a core reliability-based need.

In addition, Requirements R6, R7, and R8 were written to emulate FERC-approved PRC-006-2 (*Automatic Underfrequency Load Shedding*)[22,23] data requirements. While some of these analogous requirements in PRC-006-2 are listed as candidates for Phase 2 of the Paragraph 81 project, they are not yet approved as meeting the criteria; furthermore, the Independent Expert Review Panel has recommended that these Paragraph 81 candidates not be included for deletion, citing that "there should be a clear expectation for Planning Coordinators to share data necessary to determine their UFLS program parameters."

[21] Refer to Standards Independent Expert Review Project (IERP). (http://www.nerc.com/pa/Stand/Standard%20Development%20Plan/Standards_Independent_Experts_Review_Project_Report-SOTC_and_Board.pdf~~.~~).

[22] (http://www.nerc.com/_layouts/PrintStandard.aspx?standardnumber=PRC-006-2&title=Automatic%20Underfrequency%20Load%20Shedding~~.~~).

[23] Adopted by the NERC Board of Trustees on November 14, 2014.

Standard Development Timeline

This section is maintained by the drafting team during the development of the standard and will be removed when the standard becomes effective.

Development Steps Completed

1. The NERC Board of Trustees adopted PRC-010-1 on November 13, 2014.
2. The NERC Standards Committee authorized the initial posting on February 18, 2015.

Description of Current Draft

The UVLSSDT is posting Draft 1 of PRC-010-2 – Undervoltage Load Shedding for a 45-day initial formal comment period and concurrent/parallel initial ballot in the last ten days of the comment period. The draft contains revisions to Requirements R4 and R5 to address UVLS equipment.

Anticipated Actions	Date
45-day formal comment period with ballot	February 2015
10-day final ballot	April 2015
Board adoption	May 2015

Project Development Background

The undervoltage load shedding (UVLS) standard drafting team (SDT) was tasked with addressing Misoperation of UVLS equipment during the development of version one of PRC-010 and version three of PRC-004 in Project 2010-05.1 (i.e., Misoperation). This project has been named phase 2 of Project 2008-02 (i.e., UVLS) for clarity purposes. Each SDT for these two projects outlined work necessary to address Misoperation of UVLS equipment. This work was deferred, at the time, because both PRC-010-1 and PRC-004-3 contained dependencies with other projects requiring their completion. This phase two is a continuation of the work performed under the Standards Authorization Request (SAR) for Project 2008-02.

The revisions proposed in Reliability Standard PRC-010-2 meet the following objectives:

- Address the UVLS Misoperation the remaining work due to the retirement of PRC-022-1 (Undervoltage Load Shedding Program Performance) during the development of PRC-010-1 (Undervoltage Load Shedding)
- Ensure UVLS equipment (i.e., operation or non-operation) within the UVLS Program is assessed and mitigated

Basis for Revision

Originally, Misoperation of UVLS equipment was planned to be appended to a future version of PRC-004 (Protection System Misoperation Identification and Correction). The SDT is proposing a two-prong approach by revising both PRC-004 and PRC-010 to address the concern of identifying Misoperations of UVLS equipment in PRC-022-1.

First, the SDT proposes an addition to the Applicability section of PRC-004 to include UVLS that is intended to trip one or more Bulk Electric System (BES) Elements. This is consistent with previous communication to industry about addressing Misoperation of UVLS equipment. Entities will be required to address UVLS that trips a BES Element similarly to other Protection Systems in PRC-004. While the revision to PRC-004 consistent with the communicated approach, the SDT determined that the proposed revision fails to address the performance (operation or non-operations) of UVLS Program equipment not covered by the strict processes of PRC-004.

Second, the SDT is proposing clarifying revisions in PRC-010-2, Requirements R4 and R5 to address UVLS Program equipment performance. These revisions are not requiring UVLS entities to address UVLS protective relays not covered by the strict processes of PRC-004; however, PRC-010-2 is requiring UVLS entities to address the deficiencies (e.g., Misoperations) identified in the assessment performed by Planning Coordinator or Transmission Planner in Requirement R4. Deficiencies include the performance (operation or non-operation) issues of UVLS Program equipment. These deficiencies, if any, are addressed by the UVLS entities through a Corrective Action Plan (CAP) developed in Requirement R5 and executed by the UVLS entities in Requirement R2 of PRC-010.

The term “Misoperation” as defined by the Glossary of Terms Used in NERC Reliability Standards is not used within the Requirements of PRC-010; however, the term is used in the Guidelines and Technical Basis section of the standard to provide clarity that UVLS Program equipment deficiencies include Misoperations that are to be corrected by UVLS entities. The PRC-010-2 Reliability Standard mandates that UVLS entities are to correct the deficiencies identified by the Planning Coordinator or Transmission Planner, such as Misoperation of UVLS equipment. Deficiencies are identified through either the periodic assessment or an assessment performed following an event and included in a CAP to the UVLS entity. The structure used by the SDT allows the Planning Coordinator and Transmission Planner to assess UVLS equipment for Misoperation under PRC-010 rather than the Generator Owner, Transmission Owner, and Distribution Provider applicable to the strict processes of PRC-004.

The two-pronged approach ensures that any UVLS Program equipment containing a deficiency is identified and corrected under PRC-010 and UVLS that trips a BES Element under is corrected under PRC-004 to address the requirements in the retired PRC-022-1.

When this standard receives Board adoption, the rationale boxes in the Supplemental Material section of the standard will remain. The rationale box for Requirement R5 will be removed.

A. Introduction

1. **Title:** Undervoltage Load Shedding

2. **Number:** PRC-010-~~1~~-2

3. **Purpose:** To establish an integrated and coordinated approach to the design, evaluation, and reliable operation of Undervoltage Load Shedding Programs (UVLS Programs).

4. **Applicability:**

   4.1. Functional Entities:

   4.1.1 Planning Coordinator.

   4.1.2 Transmission Planner.

   4.1.3 Undervoltage load shedding (UVLS) entities – Distribution Providers and Transmission Owners responsible for the ownership, operation, or control of UVLS equipment as required by the UVLS Program established by the Transmission Planner or Planning Coordinator.

5. **Effective Date:** See Project 2008-02.2 Implementation Plan.

~~1. Background:~~

~~PRC-010-1 – Undervoltage Load Shedding is a consolidation and revision of the following Reliability Standards:~~

- ~~PRC-010-0 – Assessment of the Design and Effectiveness of UVLS Program~~
- ~~PRC-020-1 – Under-Voltage Load Shedding Program Database~~
- ~~PRC-021-1 – Under-Voltage Load Shedding Program Data~~
- ~~PRC-022-1 – Under-Voltage Load Shedding Program Performance~~

~~The UVLS Standard Drafting Team (or drafting team) developed the revised PRC-010-1 to meet the following objectives:~~

- ~~Address the FERC directive in Order No. 693, Paragraph 1509 to modify PRC-010-0 to require an integrated and coordinated approach to all protection systems.~~
- ~~Replace the applicability to and involvement of the Regional Reliability Organization (RRO) in PRC-020-1 and PRC-021-1.~~
- ~~Consolidate the UVLS-related standards into one comprehensive standard (similar to the construct of FERC-approved PRC-006-1 – Automatic~~

~~Underfrequency Load Shedding).~~

- ~~Clearly identify and separate centrally controlled undervoltage□based load shedding due to the reliability requirements needed for this type of load shedding as compared to other UVLS systems.~~
- ~~Create a single results□based standard that addresses current reliability issues associated with UVLS.~~

B. Requirements and Measures

R1. Each Planning Coordinator or Transmission Planner that is developing a UVLS Program shall evaluate its effectiveness and subsequently provide the UVLS Program's specifications and implementation schedule to the UVLS entities responsible for implementing the UVLS Program. The evaluation shall include, but is not limited to, studies and analyses that show: *[Violation Risk Factor: High] [Time Horizon: Long-term Planning]*

1.1. The implementation of the UVLS Program resolves the identified undervoltage issues that led to its development and design.

1.2. The UVLS Program is integrated through coordination with generator voltage ride-through capabilities and other protection and control systems, including, but not limited to, transmission line protection, autoreclosing, Remedial Action Schemes, and other undervoltage-based load shedding programs.

M1. Acceptable evidence may include, but is not limited to, date-stamped studies and analyses, reports, or other documentation detailing the effectiveness of the UVLS Program, and date-stamped communications showing that the UVLS Program specifications and implementation schedule were provided to UVLS entities.

R2. Each UVLS entity shall adhere to the UVLS Program specifications and implementation schedule determined by its Planning Coordinator or Transmission Planner associated with UVLS Program development per Requirement R1 or with any Corrective Action Plans per Requirement R5. *[Violation Risk Factor: High] [Time Horizon: Long-term Planning]*

M2. Acceptable evidence must include date-stamped documentation on the completion of actions and may include, but is not limited to, identifying the equipment armed with UVLS relays, the UVLS relay settings, associated Load summaries, work management program records, work orders, and maintenance records.

R3. Each Planning Coordinator or Transmission Planner shall perform a comprehensive assessment to evaluate the effectiveness of each of its UVLS Programs at least once every 60 calendar months. Each assessment shall include, but is not limited to, studies and analyses that evaluate whether: *[Violation Risk Factor: Medium] [Time Horizon: Long-term Planning]*

3.1. The UVLS Program resolves the identified undervoltage issues for which the UVLS Program is designed.

3.2. The UVLS Program is integrated through coordination with generator voltage ride-through capabilities and other protection and control systems, including,

but not limited to, transmission line protection, autoreclosing, Remedial Action Schemes, and other undervoltage-based load shedding programs.

M3. Acceptable evidence may include, but is not limited to, date-stamped reports or other documentation detailing the assessment of the UVLS Program.

Rationale for Requirement R4: Refer to the Supplemental Section at the end of the document for the rationale.

R4. Each Planning Coordinator or Transmission Planner shall, within 12 calendar months of an event that resulted in a voltage excursion for which its UVLS Program was designed to operate, perform an assessment to evaluate ~~whether its UVLS Program resolved the undervoltage issues associated with the event.~~: *[Violation Risk Factor: Medium] [Time Horizon: Operations Planning]*

4.1. Whether its UVLS Program resolved the undervoltage issues associated with the event, and

4.2. The performance (i.e., operation and non-operation) of the UVLS Program equipment.

M4. Acceptable evidence may include, but is not limited to, date-stamped event data, event analysis reports, or other documentation detailing the assessment of the UVLS Program and associated equipment.

R5. Each Planning Coordinator or Transmission Planner that identifies deficiencies ~~in its UVLS Program~~ during an assessment performed in either Requirement R3 or R4 shall develop a Corrective Action Plan to address the deficiencies and subsequently provide the Corrective Action Plan, including an implementation schedule, to UVLS entities within three calendar months of completing the assessment. *[Violation Risk Factor: Medium] [Time Horizon: Operations Planning]*

M5. Acceptable evidence must include a date-stamped Corrective Action Plan that addresses identified deficiencies and may also include date-stamped reports or other documentation supporting the Corrective Action Plan. Evidence should also include date-stamped communications showing that the Corrective Action Plan and an associated implementation schedule were provided to UVLS entities.

R6. Each Planning Coordinator that has a UVLS Program in its area shall update a database containing data necessary to model the UVLS Program(s) in its area for use in event analyses and assessments of the UVLS Program at least once each calendar year. *[Violation Risk Factor: Lower] [Time Horizon: Operations Planning]*

M6. Acceptable evidence may include, but is not limited to, date-stamped spreadsheets, database reports, or other documentation demonstrating a UVLS Program database was updated.

R7. Each UVLS entity shall provide data to its Planning Coordinator according to the format and schedule specified by the Planning Coordinator to support maintenance of a UVLS Program database. *[Violation Risk Factor: Lower] [Time Horizon: Operations Planning]*

M7. Acceptable evidence may include, but is not limited to, date-stamped emails, letters, or other documentation demonstrating data was provided to the Planning Coordinator as specified.

R8. Each Planning Coordinator that has a UVLS Program in its area shall provide its UVLS Program database to other Planning Coordinators and Transmission Planners within its Interconnection, and other functional entities with a reliability need, within 30 calendar days of a written request. *[Violation Risk Factor: Lower] [Time Horizon: Operations Planning]*

M8. Acceptable evidence may include, but is not limited to, date-stamped emails, letters, or other documentation demonstrating that the UVLS Program database was provided within 30 calendar days of receipt of a written request.

C. Compliance

1. Compliance Monitoring Process

1.1. Compliance Enforcement Authority

As defined in the NERC Rules of Procedure, "Compliance Enforcement Authority" means NERC or the Regional Entity in their respective roles of monitoring and enforcing compliance with the NERC Reliability Standards.

1.2. Evidence Retention

The following evidence retention periods identify the period of time an entity is required to retain specific evidence to demonstrate compliance. For instances where the evidence retention period specified below is shorter than the time since the last audit, the Compliance Enforcement Authority may ask an entity to provide other evidence to show that it was compliant for the full-time period since the last audit.

The Planning Coordinator, Transmission Planner, Distribution Provider, and Transmission Owner shall keep data or evidence to show compliance as identified below unless directed by its Compliance Enforcement Authority to retain specific evidence for a longer period of time as part of an investigation.

The applicable entity shall retain documentation as evidence for six calendar years.

If an applicable entity is found non-compliant, it shall keep information related to the non-compliance until mitigation is complete and approved, or for the time specified above, whichever is longer.

The Compliance Enforcement Authority shall keep the last audit records and all requested and submitted subsequent audit records.

1.3. Compliance Monitoring and Assessment Processes:

"Compliance Monitoring and Assessment Processes" refers to the identification of the processes that will be used to evaluate data or information for the purpose of assessing performance or outcomes with the associated reliability standard.

1.4. Additional Compliance Information

None.

Table of Compliance Elements

R #	Time Horizon	VRF	Violation Severity Levels			
			Lower VSL	Moderate VSL	High VSL	Severe VSL
R1	Long-term Planning	High	N/A	N/A	N/A	The applicable entity that developed the UVLS Program failed to evaluate the program's effectiveness and subsequently provide the UVLS Program's specifications and implementation schedule to UVLS entities in accordance with Requirement R1, including the items specified in Parts 1.1 and 1.2.

R #	Time Horizon	VRF	Violation Severity Levels			
			Lower VSL	Moderate VSL	High VSL	Severe VSL
R2	Long-term Planning	High	N/A	N/A	The applicable entity failed to adhere to the UVLS Program specifications in accordance with Requirement R2. OR The applicable entity failed to adhere to the implementation schedule in accordance with Requirement R2.	The applicable entity failed to adhere to the UVLS Program specifications and implementation schedule in accordance with Requirement R2.
R3	Long-term Planning	Medium	N/A	N/A	N/A	The applicable entity failed to perform an assessment at least once during the 60 calendar months in accordance with Requirement R3, including the items specified in Parts 3.1 and 3.2.

R #	Time Horizon	VRF	Violation Severity Levels			
			Lower VSL	Moderate VSL	High VSL	Severe VSL
R4	Operations Planning	Medium	The applicable entity performed an assessment in accordance with Requirement R4 within a time period greater than 12 calendar months but less than or equal to 13 calendar months after an applicable event.	The applicable entity performed an assessment in accordance with Requirement R4 within a time period greater than 13 calendar months but less than or equal to 14 calendar months after an applicable event.	The applicable entity performed an assessment in accordance with Requirement R4 within a time period greater than 14 calendar months but less than or equal to 15 calendar months after an applicable event.	The applicable entity performed an assessment in accordance with Requirement R4 within a time period greater than 15 calendar months after an applicable event. OR The applicable entity failed to perform an assessment in accordance with Requirement R4.

R #	Time Horizon	VRF	Violation Severity Levels			
			Lower VSL	Moderate VSL	High VSL	Severe VSL
R5	Operations Planning	Medium	The applicable entity developed a Corrective Action Plan and provided it to UVLS entities in accordance with Requirement R5 but was late by less than or equal to 15 calendar days.	The applicable entity developed a Corrective Action Plan and provided it to UVLS entities in accordance with Requirement R5 but was late by more than 15 calendar days but less than or equal to 30 calendar days.	The applicable entity developed a Corrective Action Plan and provided it to UVLS entities in accordance with Requirement R5 but was late by more than 30 calendar days but less than or equal to 45 calendar days.	The applicable entity developed a Corrective Action Plan and provided it to UVLS entities in accordance with Requirement R5 but was late by more than 45 calendar days. OR The responsible entity failed to develop a Corrective Action Plan or provide it to UVLS entities in accordance with Requirement R5.

R #	Time Horizon	VRF	Violation Severity Levels			
			Lower VSL	Moderate VSL	High VSL	Severe VSL
R6	Operations Planning	Lower	The applicable entity updated the database in accordance with Requirement R6 but was late by less than or equal to 30 calendar days.	The applicable entity updated the database in accordance with Requirement R6 but was late by more than 30 calendar days but less than or equal to 60 calendar days.	The applicable entity updated the database in accordance with Requirement R6 but was late by more than 60 calendar days but less than or equal to 90 calendar days.	The applicable entity updated the database in accordance with Requirement R6 but was late by more than 90 calendar days. OR The applicable entity failed to update the database in accordance with Requirement R6.

R #	Time Horizon	VRF	Violation Severity Levels			
			Lower VSL	Moderate VSL	High VSL	Severe VSL
R7	Operations Planning	Lower	The applicable entity provided data in accordance with Requirement R7 but was late by less than or equal to 30 calendar days per the specified schedule. OR The applicable entity provided data in accordance with Requirement R7 but the data was not provided according to the specified format.	The applicable entity provided data in accordance with Requirement R7 but was late by more than 30 calendar days but less than or equal to 60 calendar days per the specified schedule.	The applicable entity provided data in accordance with Requirement R7 but was late by more than 60 calendar days but less than or equal to 90 calendar days per the specified schedule.	The applicable entity provided data in accordance with Requirement R7 but was late by more than 90 calendar days per the specified schedule. OR The applicable entity failed to provide data in accordance with Requirement R7.

R #	Time Horizon	VRF	Violation Severity Levels			
			Lower VSL	Moderate VSL	High VSL	Severe VSL
R8	Operations Planning	Lower	The applicable entity provided its UVLS Program database in accordance with Requirement R8 but was late by less than or equal to 15 calendar days.	The applicable entity provided its UVLS Program database in accordance with Requirement R8 but was late by more than 15 calendar days but less than or equal to 30 calendar days.	The applicable entity provided its UVLS Program database in accordance with Requirement R8 but was late by more than 30 calendar days but less than or equal to 45 calendar days.	The applicable entity provided its UVLS Program database in accordance with Requirement R8 but was late by more than 45 calendar days. OR The applicable entity failed to provide its UVLS Program database in accordance with Requirement R8.

D. Regional Variances

None.

E. Interpretations

None.

F. Associated Documents

None.

Version History

Version	Date	Action	Change Tracking
0	February 8, 2005	Adopted by NERC Board of Trustees	
0	April 1, 2005	Effective Date	
0	February 7, 2013	Adopted by NERC Board of Trustees	R2 and associated elements for retirement as part of the Paragraph 81 project (Project 2013-02) pending applicable regulatory approval.
1	November 13, 2014	Adopted by NERC Board of Trustees	Revisions made under Project 2008-02: Undervoltage Load Shedding (UVLS) & Underfrequency Load Shedding (UFLS) to address directive issued in FERC Order No. 763.
2		Adopted by NERC Board of Trustees	Revisions made under Project 2008-02.2: Undervoltage Load Shedding (UVLS): Misoperation to include UVLS equipment.

Guidelines and Technical Basis

Introduction

~~PRC-010-1 is a single, comprehensive standard that addresses the same reliability principles outlined in its legacy standards, PRC-010-0, PRC-020-1, PRC-021-1, and PRC-022-1. The standard also addresses a FERC directive from Order No. 693, Paragraph 1509. This paragraph directs NERC to develop a modification to PRC-010-0 that requires an integrated and coordinated approach to all protection systems, including generators and transmission lines, generators' low voltage ride-through capabilities, and underfrequency load shedding (UFLS) and UVLS programs.~~

~~Since FERC-approved PRC-006-1 – Automatic Underfrequency Load Shedding was developed under a similar construct of combining existing standards and addressing a FERC Order No. 693 directive, the drafting team looked to this standard as a guide. With the understanding that UVLS and UFLS systems have fundamental differences, the drafting team adopted PRC-006-1's industry-vetted reliability principles and language as applicable to UVLS Programs.~~

~~The drafting team's established purpose for PRC-010-1 is to clearly define the responsibilities of applicable entities to pursue an integrated and coordinated approach to the design, evaluation, and reliable operation of UVLS Programs. Since the need for and design of UVLS Programs is unique to each system preservation footprint, the intent of the standard is to provide a framework of reliability requirements for such programs to which each individual entity can apply its program's specific considerations and characteristics. The drafting team emphasizes that PRC-010-1 does not require a mandatory UVLS Program, nor does this standard address the need to have a UVLS Program. PRC-010-1 applies only after an entity has determined the need for a UVLS Program as a result of its own planning studies.~~

~~The~~The standard drafting team provides the following discussion to support the approach to the standard. The information is meant to enhance the understanding of the reliability needs and deliverable expectations of each requirement, supported as necessary by technical principles and industry experience.

~~The design and characteristics of a centrally controlled undervoltage-based load shedding system are commensurate with a Special Protection System (SPS) or Remedial Action Scheme (RAS), therefore, the drafting team maintains that this type of load shedding should be covered by SPS or RAS-related Reliability Standards. Therefore, PRC-010-1 introduces a new Glossary of Terms Used in NERC Reliability Standards term, UVLS Program, to establish the applicability of PRC-010-1 to automatic load shedding programs consisting of distributed relays and controls used to mitigate undervoltage conditions impacting the Bulk Electric System (BES), leading to voltage instability, voltage collapse, or Cascading. Undervoltage-based load shedding that does not have such an impact as determined by the Planning Coordinator or Transmission Planner is not included. It is further noted that this term excludes centrally controlled undervoltage-based load shedding.~~

~~Subsequently, since the current Glossary of Terms Used in NERC Reliability Standards definition of Special Protection System excludes UVLS, concurrent Project 2010□05.2 – Special Protection Systems (Phase 2 of Protection Systems) will adjust the definition to exclude only UVLS Programs as defined above and therefore include centrally controlled undervoltage□based load shedding. Of note, the drafting team for Project 2010□05.2 is proposing to change the term from Special Protection System to Remedial Action Scheme. Accordingly, PRC□010□1 uses the term Remedial Action Scheme instead of Special Protection System. In the current inventory of NERC Reliability Standards, there is one instance of the term undervoltage load shedding program, which is in NUC□001□2.1. Project 2012□13 Nuclear Plant Interface Coordination has adjusted the language of this reference in proposed NUC□001□3 to eliminate any potential confusion of a lowercase usage of a defined term. Likewise, future projects containing standards that feature variations of the term (e.g., undervoltage load shedding system) will also be advised to consider the newly defined term.~~

~~Requirements of the revised Reliability Standard PRC□010□1 meet the following objectives:~~

- ~~Evaluate a UVLS Program's effectiveness prior to implementation, including the program's coordination with other protection systems and generator voltage ride-through capabilities.~~
- ~~Adhere to UVLS Program specifications and implementation schedule.~~
- ~~Perform periodic assessment and performance analysis of UVLS Programs and resolve identified deficiencies.~~
- ~~Maintain and share UVLS Program data.~~

~~Also of note, Project 2009□03 – Emergency Operations is proposing EOP□011□1, which, as part of the overall revisions, retires specific requirements from EOP□003□2 – Load Shedding Plans to eliminate identified redundancy between PRC□010□1 and EOP□003□2. In addition, the UVLS drafting team's intention is for PRC□004 to address Misoperations of UVLS Programs that are intended to trip one or more BES Elements. A change to make these types of UVLS Programs explicitly applicable to PRC□004 will be addressed once PRC□004□3 – Protection System Misoperation Identification and Correction is completed under Project 2010□05.1 – Misoperations (Phase 1 of Protection Systems).~~

Guidelines for UVLS Program Definition

The definition for the term~~-~~, “Undervoltage Load Shedding Program” or “UVLS Program” includes automatic load shedding programs that utilize only voltage inputs at locations where action is taken to shed load. As such, the failure of a single component is unlikely to affect the reliable operation of the program.

The ~~definition for the term~~ UVLS Program definition excludes centrally controlled undervoltage-based load shedding, which utilizes inputs from multiple locations and may also utilize inputs other than voltages (such as generator reactive reserves, facility loadings, equipment statuses, etc.). The design and characteristics of a centrally controlled undervoltage-based load shedding system are the same as that of a Remedial Action Scheme (RAS~~,~~), wherein load shedding is the remedial action. Therefore, just like for a RAS, the failure of a single component can compromise the reliable operation of centrally controlled undervoltage-based load shedding.

To ensure that the applicability of the standard ~~is to~~includes only those undervoltage-based load shedding systems whose performance has an impact on system reliability, a UVLS Program must mitigate risk of one or more of the following: voltage instability, voltage collapse, or Cascading impacting the ~~BES.~~Bulk Electric System (BES). An example of a program that would not fall under this category is undervoltage-based load shedding installed to mitigate damage to equipment or local loads that are directly affected by the low voltage event.

~~Below~~Figure 1 below is an example of a BES subsystem for which a UVLS system could be used as a solution to mitigate various issues following the loss of the 345 kV double circuit line between ~~bus~~buses A and ~~bus~~ B. If the consequence of this Contingency does not impact the BES by leading to voltage instability, voltage collapse, or Cascading ~~involving the BES~~, a UVLS system (installed at either, or both, bus B and D) used to mitigate this ~~case~~Contingency would not fall under the definition of a UVLS Program. However, if this same UVLS system ~~would be~~is used to mitigate an Adverse Reliability Impact outside this contained area, it would be classified as a wide-area undervoltage problem and would fall under the definition of UVLS Program.

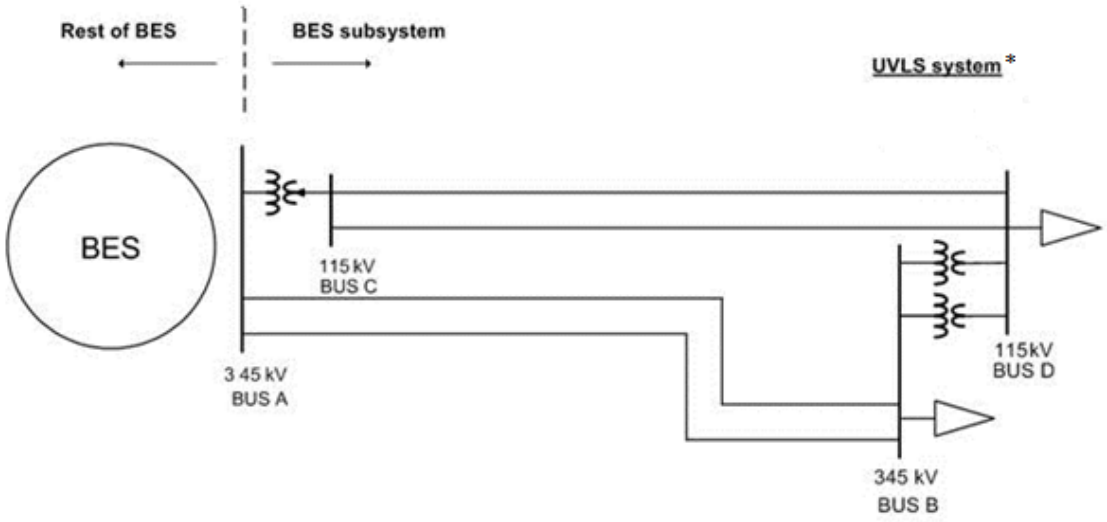

*UVLS systems may be installed at either, or both, bus B and D

~~High Level Requirement Overview~~

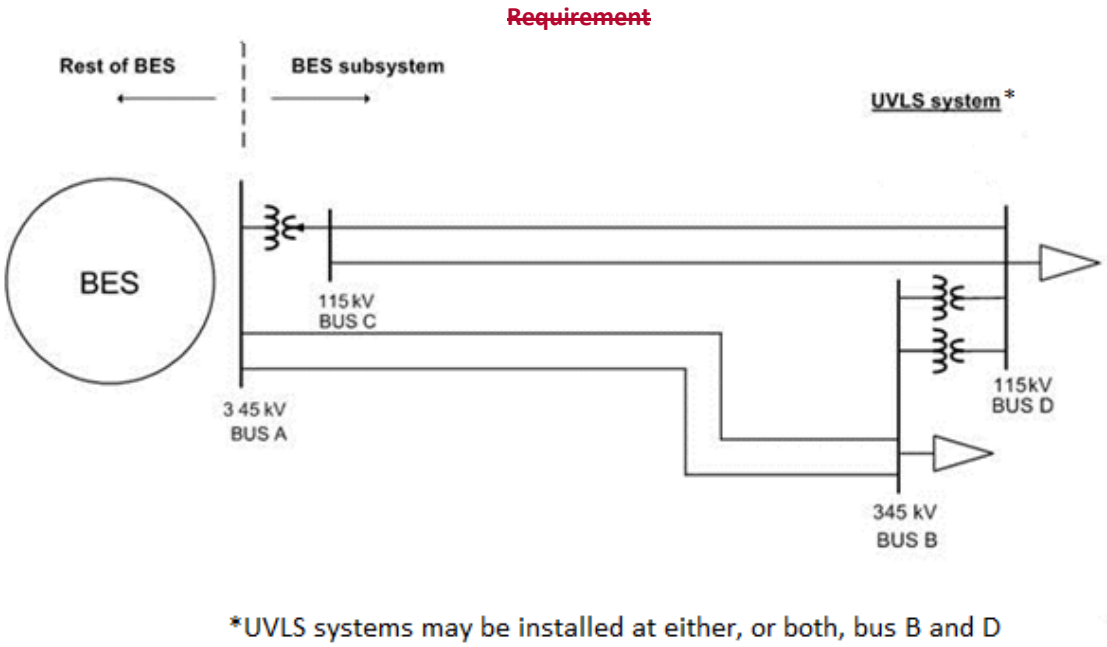

Figure 1: UVLS Subsystem

Guidelines for Requirements

Table 1 provides a high-level overview of the requirements contained in the standard.

Table 1: High-Level Requirement Overview

Requirement	Entity	Evaluate Program Effectiveness	Adhere to Program Specifications and Schedule	Perform Program Assessment (Periodic or Performance)	Develop a CAP to Address Program Deficiencies	Update and/or Share Program Data
R1	PC or TP	X				
R2	UVLS entity		X			
R3	PC or TP	X		X		
R4	PC or TP	X		X		
R5	PC or TP				X	
R6	PC					X
R7	UVLS entity					X
R8	PC					X

Guidelines for Requirement R1~~:~~

A UVLS Program may be developed and implemented to either serve as a safety net system protection measure against unforeseen extreme Contingencies or to achieve specific system performance for known transmission Contingencies for which dropping of load is allowed under Transmission Planning (TPL) Reliability Standards. Regardless of the purpose, it is important that the UVLS Program being implemented is effective in terms that it mitigates undervoltage conditions impacting the Bulk Electric System (BES), leading to voltage instability, voltage collapse, or Cascading. Consideration should be given to voltage set points and time delays, rate of voltage decay or recovery, power flow levels, etc. when designing a UVLS Program.

For the UVLS Program to be effective in achieving its goal, it is also necessary that the UVLS Program is coordinated with generator voltage ride-through capabilities and other protection and control systems that may have an impact on the performance of the UVLS Program. Some of these protection and control systems may include, but are not limited to, transmission line protection, RAS, other undervoltage-based load shedding programs, autoreclosing, and controls of shunt capacitors, reactors, and static ~~var~~voltampere-reactive systems (SVSs).

For example, if the purpose of a UVLS Program is to mitigate fault-induced delayed voltage recovery (FIDVR) events in a large load center that also includes local generation, it is important that such a UVLS Program is coordinated with local generators' voltage ride-through capabilities. Generators in the vicinity of a load center are critical to providing dynamic voltage support to the system during FIDVR events. To maximize the benefit of on-line generation, the best practice may be to shed load prior to generation trip. However, occasionally, it may be best to let generation trip prior to load shed. Therefore, the impact of generation tripping should be considered while designing a UVLS Program.

Another example that can be highlighted is the coordination of a UVLS Program with automatic shunt reactor tripping devices if there are any on the system. Most likely, any shunt reactors on the system will trip off automatically after some time delay during low voltage conditions. In such cases, shunt reactors should be tripped before the load is shed to preserve the system. This may require coordination of time delays associated with the UVLS Program with shunt reactor tripping devices.

~~Examples~~The examples given above demonstrate that, for a UVLS Program to be effective, proper consideration should be given to coordination of a UVLS Program with generator ride-through capabilities and other protection and control systems.

Guidelines for Requirement R2~~:~~

Once a Planning Coordinator (PC) or Transmission Planner (TP) has identified a need for a UVLS Program, the Planning Coordinator or Transmission Planner will develop a program that includes specifications and an implementation schedule, which are then provided to UVLS entities per Requirement R1. Specifications may include voltage set points, time delays, amount of load to be shed, and the location at which load needs to be shed~~, etc~~. If UVLS entities do not implement the UVLS Program according to the specifications and schedule provided, the UVLS Program may not be effective and may not achieve its intended goal. The UVLS entity must document that all necessary actions were completed to implement the UVLS Program.

Similarly, when a Corrective Action Plan (CAP) to address UVLS Program deficiencies is developed by the Planning Coordinator or Transmission Planner and provided to UVLS entities per Requirement R5, UVLS entities must comply with the CAP and its associated implementation schedule to ensure that the UVLS Program is effective. The UVLS entity is required to complete the actions specified in the CAP, document the plan implementation, and retain the appropriate evidence to demonstrate implementation and completion.

Deferrals or other relevant changes to the UVLS Program specifications or CAP need to be documented so that the record includes not only what was planned, but what was implemented. Depending on the planning and documentation format used by the responsible entity, evidence of a successful execution could consist of signed-off work orders, printouts from work management systems, spreadsheets of planned versus completed work, timesheets, work inspection reports, paid invoices, photographs, walk-through reports, or other evidence.

For example, documentation of a CAP provides an auditable progress and completion confirmation for the identified UVLS Program deficiency:

> **CAP Example 1** - Corrective actions for a quick triggering problem; preemptive actions for similar installations:

The PC or TP obtains fault records from a UVLS entity that participates in its UVLS Program that indicate a group of UVLS relays triggered at the appropriate undervoltage level but with shorter delays than expected. The PC or TP directed the UVLS entity to schedule on-site inspections within three weeks. The results of the inspection confirmed that the delay-time programmed on the relays was 60 cycles instead of 90 cycles. The PC or TP then directed the UVLS entity to correct to a 90-cycle time delay setting of the UVLS relays identified to have shorter time delay settings within eight weeks.

Applicability to other UVLS relays: The PC or TP then developed a schedule with the UVLS entity to verify and adjust all remaining UVLS relays time delay settings within a one-year period.

The PC or TP verified completion of verification and adjustment of the time delay settings for all of the UVLS entity's equipment that participates in the PC or TP UVLS Program

CAP Example 2 - Corrective actions for a firmware problem; preemptive actions for similar installations:

The PC or TP obtains fault records on 6/4/2014 from a UVLS entity that participates in its UVLS Program. The UVLS entity also provided the fault records to the manufacturer, who responded on 6/11/2014 that the ~~misoperation~~Misoperation[1] of the UVLS relay was caused by a bug in version 2 firmware, and recommended installing version 3 firmware. The PC or TP approved the UVLS entity's plan to schedule Version 3 firmware installation on 6/12/2014.

Applicability to other UVLS relays: The PC or TP then developed a schedule with the UVLS entity to install firmware version 3 at all of the UVLS entity's UVLS relays that are determined to be programmed with version 2 firmware. The completion date was scheduled no-later-than 12/31/2014.

The firmware replacements were completed on 12/4/2014.

Guidelines for Requirement R3~~:~~

In addition to the initial studies required to develop a UVLS Program, periodic comprehensive assessments (detailed analyses) are required to ensure its continued effectiveness. This assessment ~~should~~is required to be completed at least once every 60 calendar months to capture the accumulated

[1] Misoperation of Protection Systems reporting was initiated by the NERC Board of Trustees adopted NERC Rules of Procedure, Section 1600, Request for Data or Information. Refer to: *Request for Data of Information, Protection System Misoperation Data Collection*, August 14, 2014. http://www.nerc.com/pa/RAPA/ProctectionSystem Misoperations/PRC-004-3%20Section%201600%20Data%20Request_20140729.pdf.

effects of minor changes to the system that have occurred since the last assessment was completed. However, at any point in time, a Planning Coordinator or Transmission Planner may also determine that a material change[2] to system topology or operating conditions affects the performance of the UVLS Program and therefore necessitates the same comprehensive assessment. Regardless of the trigger, each assessment should include an evaluation of each UVLS Program to ensure the continued integration through coordination.

This comprehensive assessment supplementscomplements the TPL-001-4 annual assessment requirement to evaluate the impact of protection systems. The 60-month period is the same time frame used in TPL-001-4 and in PRC-006-1.

With respect to situations in which a material change to system and topology or operating conditions would necessitate a comprehensive assessment of the UVLS Program, it is understood that the term material change is not transportable on a continent□wide basis. This determination must be made by the Planning Coordinator or Transmission Planner and should be accompanied by documentation to support the technical rationale for determining material changes.

As specified in Requirement R3, a comprehensive assessment must be performed at least once every 60 calendar months. If a Planning Coordinator or Transmission Planner conducts a comprehensive assessment sooner for the reasons discussed above, the 60-month time period would restart upon completion of this assessment.

Guidelines for Requirement R4:

TheAfter a voltage excursion event, the goal of the assessment required in Requirement R4 is to evaluate: (1) whether the UVLS Program resolved the undervoltage issues for an event that occurred on the system. It is expected that, and (2) the performance of the UVLS Program equipment. The assessment should include event data analysis, such as the relevant sequence of events leading to the undervoltage conditions (e.g., Contingencies, operation of protection systems, and RAS) and field measurements useful to analyzing the behavior of the system. A comprehensive description of the UVLS Program operation should be presented, including conditions of the trigger (e.g., voltage levels, time delays) and amount of load shed for each affected substation. Assessment of the event shall beis performed to evaluate the level of performance of the program for the event of interest and to identify deficiencies to be included in a CAP per Requirement R5. Misoperation of UVLS equipment is addressed as a deficiency. Reporting of UVLS equipment Misoperations are addressed by the NERC *Request for Data and Information, Protection System Misoperation Data Collection*.[3]

The studies and analyses showing the effectiveness of the UVLS Program can be similar to what is required in Requirements R1 and R3, but should include a clear link between the evaluation of

[2] It is understood that the term material change is not transportable on a continent-wide basis. This determination must be made by the Planning Coordinator or Transmission Planner and should be accompanied by documentation to support the technical rationale for determining material changes.
[3] Id.

effectiveness (in studies using simulations) and the analysis of the event (with measurements and event data) that actually occurred. For example, differences between the expected and actual system behavior for the event of interest should be discussed and modeling assumptions should be evaluated. Important discrepancies between the simulations and the actual event should be investigated.

Considering the importance of an event that involves the operation of a UVLS Program, the 12- calendar-month period provides adequate time to analyze the event and perform an assessment while identifying deficiencies within a reasonable time. This time period is also required in PRC- 006-1.

Guidelines for Requirement R5:

Requirement R5 promotes the prudent correction of an identified problem during the assessment ~~evaluations~~ of ~~each~~a UVLS Program. Per Requirements R3 and R4, an assessment of an active UVLS Program is triggered:

- Within 12 calendar months of an event that resulted in a voltage excursion for which the program was designed to operate~~.~~
- At least once every 60 calendar months. The default time frame of 60 calendar months or less between assessments has the intention to assure that the cumulative changes to the network and operating condition affecting the UVLS Program are evaluated~~.~~

Since every UVLS is unique, if material changes are made to system topology or operating conditions, the Planning Coordinator or Transmission Planner will decide the degree to which the change in topology or operating condition becomes a material change sufficient to trigger an assessment of the existing UVLS Program.

A CAP is a list of actions and an associated timetable for implementation to remedy a specific problem. It is a proven tool for resolving operational problems. Per Requirement R5, the Planning Coordinator or Transmission Planner is required to develop a CAP and provide it to UVLS entities to accomplish the purpose of this requirement, which is to prevent future deficiencies in the UVLS Program, thereby minimizing risk to the system. Determining the cause of the deficiency is essential in developing an effective CAP to avoid future re-occurrence of the same problem. A CAP can be revised if additional causes are found.

Based on industry experience and operational coordination timeframes, ~~the drafting team believes that within~~ three calendar months from the date an assessment is completed is a reasonable time frame for development of a CAP, including time to consider alternative solutions and coordination of resources. The “within three calendar months” time frame is solely to develop a CAP, including its implementation schedule, and provide it to UVLS entities. It does not include the time needed for its implementation by UVLS entities. This implementation time frame is dictated within the CAP’s associated timetable for implementation, and the execution of the CAP according to its schedule is required in Requirement R2.

Guidelines for Requirements R6–R8

An accurate UVLS Program database is necessary for the Planning Coordinator or Transmission Planner to perform system reliability assessment studies and event analysis studies. Without accurate data, there is a possibility that annual reliability assessment studies that are performed by the Planning Coordinator or Transmission Planner can lead to erroneous results and therefore impact reliability. Also, without the accurate data, it is very difficult for the Planning Coordinator or Transmission Planner to duplicate a UVLS event and determine the root cause of the problem.

To support a UVLS Program database, it is necessary for each UVLS entity to provide accurate data to its Planning Coordinator. Each UVLS entity will provide the data according to the specified format and schedule provided by the Planning Coordinator. This is required in order for the Planning Coordinator to maintain and support a comprehensive UVLS Program database. By having a comprehensive database, the Planning Coordinator can embark on a reliability assessment or event analysis/benchmarking studies, identify the issues with the UVLS Program, and develop ~~remedial action plans~~Corrective Action Plans.

The UVLS Program database may include, but is not limited to the following:

- Owner and operator of the UVLS Program
- Size and location of customer load, or percent of connected load, to be interrupted

- Corresponding voltage set points and clearing times
- Time delay from initiation to trip signal
- Breaker operating times
- Any other schemes that are part of or impact the UVLS Programs, such as related generation protection, islanding schemes, automatic load restoration schemes, underfrequency load shedding (UFLS~~;~~), and RAS~~.~~

Additionally, the UVLS Program database ~~should~~is required to be updated annually (once every calendar year) by the Planning Coordinator. The intent here is for UVLS entities to review the data annually and provide changes to the Planning Coordinators so that Planning Coordinators can keep the databases current and accurate for performing event analysis and other assessments.

Finally, a Planning Coordinator is required to provide information to other Planning Coordinators and Transmission Planners within its Interconnection, and other functional entities with a reliability need, within 30 calendar days of receipt of a written request. Thirty calendar days was selected as the time frame as it is considered to be reasonable and well-accepted by the industry. Also, this requirement of sharing the database with applicable functional entities supports the directive provided by FERC that requires an integrated and coordinated approach to UVLS programs (Paragraph 1509 of FERC Order No. 693).

~~Version History~~

~~Version~~	~~Date~~	~~Action~~	~~Change Tracking~~
~~0~~	~~April 1, 2005~~	~~Effective Date~~	~~New~~

0	February 8, 2005	Adopted by NERC Board of Trustees	
0	March 16, 2007	Approved by FERC	
0	February 7, 2013	R2 and associated elements approved by NERC Board of Trustees for retirement as part of the Paragraph 81 project (Project 2013-02) pending applicable regulatory approval.	
0	November 21, 2013	R2 and associated elements approved by FERC for retirement as part of the Paragraph 81 project (Project 2013-02)	
1.0	November 13, 2014	Adopted by NERC Board of Trustees	Revisions made under Project 2008-02: Undervoltage Load Shedding (UVLS) & Underfrequency Load Shedding (UFLS) to address directive issued in FERC Order No. 763. Completed revision, merged and updated PRC-010-0, PRC-020-1, PRC-021-1, and PRC-022-1.

Rationale:

During development of this standard, text boxes were embedded within the standard to explain the rationale for various parts of the standard. Upon BOT approval, the text from the rationale text boxes was moved to this section.

Rationale for Applicability

This standard is applicable to Planning Coordinators and Transmission Planners that have or are developing a UVLS Program, and to Distribution Providers and Transmission Owners responsible for the ownership, operation, or control of UVLS equipment as required by the UVLS Program established by the Transmission Planner or Planning Coordinator. These Distribution Providers and Transmission Owners are referred to as UVLS entities for the purpose of this standard.

The applicability includes both the Planning Coordinator and Transmission Planner because either may be responsible for designing and coordinating the program based on agreements, memorandums of understanding, or tariffs.

The phrase "Planning Coordinator or Transmission Planner" provides the latitude for applicability to the entity that will perform the action. The expectation is not that both parties will perform the action, but rather that the Planning Coordinator and Transmission Planner will engage in discussion to determine the appropriate responsible entity.

Rationale for R1

In Paragraph 1509 from Order No. 693, FERC directed NERC to require an integrated and coordinated approach to all protection systems. The drafting team agrees that a lack of coordination among protection systems is a key risk to reliability, and that each Planning Coordinator or Transmission Planner that develops a UVLS Program should evaluate the program's viability and effectiveness prior to implementation. This evaluation should include studies and analyses used when developing the program that show implementation of the program resolves the identified undervoltage conditions that led to its design. These studies and analyses should also show that the UVLS Program is integrated through coordination with generator voltage ride-through capabilities and other protection and control systems. Though presented as separate items, the drafting team recognizes that the studies that show coordination considerations and that the program addresses undervoltage issues may be interrelated and presented as one comprehensive analysis.

In addition, Requirement R1 also requires the Planning Coordinator or Transmission Planner to provide the UVLS Program's specifications and implementation schedule to applicable UVLS entities to implement the program. It is noted that studies to evaluate the effectiveness of the program should be completed prior to providing the specifications and schedule.

Rationale for R2

UVLS entities must implement a UVLS Program or address any necessary corrective actions for a UVLS Program according to the specifications and schedule provided by the Planning Coordinator or Transmission Planner. If UVLS entities do not implement the UVLS Program

according to the specifications and schedule provided, the UVLS Program may not be effective and may not achieve its intended goal.

Rationale for R3

A periodic comprehensive assessment (detailed analysis) should be conducted to identify and catalogue the accumulated effects of minor changes to the system that have occurred since the last assessment was completed, and should include an evaluation of each UVLS Program to ensure the continued integration through coordination. This comprehensive assessment supplements the NERC Reliability Standard TPL-001-4 annual assessment requirement to evaluate the impact of protection systems.

Based on the drafting team's knowledge and experience, and in keeping with time frames contained in similar requirements from other PRC Reliability Standards, 60 calendar months was determined to be the maximum amount of time allowable between assessments. Assessments will be performed sooner than the end of the 60-calendar month period if the Planning Coordinator or Transmission Planner determines that there are material changes to system topology or operating conditions that affect the performance of a UVLS Program. Note that the 60-calendar-month time frame would reset after each assessment.

Rationale for R4

A UVLS Program not functioning as expected during a voltage excursion event for which the UVLS Program was designed to operate presents a critical risk to system reliability. Therefore, a timely assessment to evaluate (1) whether the UVLS Program resolved the undervoltage issues and (2) the performance of the UVLS Program equipment associated with the applicable event is essential. The 12 calendar months (from the date of the event) provides adequate time to coordinate with other Planning Coordinators, Transmission Planners, Transmission Operators, and UVLS entities, simulate pre- and post-event conditions, and complete the performance assessment.

Rationale for R5

If program deficiencies are identified during an assessment ~~of a UVLS Program~~ performed in either Requirement R3 or R4, the Planning Coordinator or Transmission Planner must develop a Corrective Action Plan (CAP) to address the deficiencies. Based on the drafting team's knowledge and experience with UVLS studies, three calendar months was determined to provide a judicious balance between the reliability need to address deficiencies expeditiously and the time needed to consider potential solutions, coordinate resources, develop a CAP and implementation schedule, and provide the CAP and schedule to UVLS entities.

It is noted that the three-month time frame is only to develop the CAP and provide it to UVLS entities and does not encompass the time UVLS entities have to implement the CAP. Requirement R2 requires UVLS entities to execute the CAP according to the schedule provided by the Planning Coordinator or Transmission Planner.

Rationale for R6

Having accurate and current data is required for the Planning Coordinator to perform undervoltage studies and for use in event analyses. Requirement R6 supports this reliability need by requiring the Planning Coordinator to update its UVLS Program database at least once each calendar year.

Rationale for R7

Having accurate and current data is required for the Planning Coordinator to perform undervoltage studies and for use in event analyses. -Requirement R7 supports this reliability need by requiring the UVLS entity to provide UVLS Program data in accordance with specified parameters.

Rationale for R8

Requirement R8 supports the integrated and coordinated approach to UVLS programs directed by Paragraph 1509 of Order No. 693 by requiring that UVLS Program data be shared with neighboring Planning Coordinators and Transmission Planners within a reasonable time period. Requests for the database should also be fulfilled for those functional entities that have a reliability need for the data (such as the Transmission Operators that develop System Operating Limits and Reliability Coordinators that develop Interconnection Reliability Operating Limits).

Frequently Asked Questions

To succinctly address common comment themes that require drafting team response on Project 2008-02 UVLS (proposed PRC-010-1), the drafting team provides the following discussion in the construct of an FAQ format.

Introduction

This Frequently Asked Questions (FAQ) document was created during the development of PRC-010-1 (*Undervoltage Load Shedding*)[4,5] to succinctly address common comment themes with respect to the approach and intent of the Project 2008-02 Undervoltage Load Shedding (UVLS)[6] standard drafting team ("drafting team"). This FAQ document is the outcome of comments received during comment periods and multiple outreach sessions with industry. All comments submitted by industry during comment periods may be reviewed on the project page.

Subsequent to the adoption of PRC-010-1, the UVLS drafting team made minor revisions to the standard address the UVLS Misoperation identification and correction.[7] This FAQ document was amended to reflect up the approach and intent of the drafting team during the development of PRC-010-2 concerning Misoperation of UVLS equipment.

Purpose of Standard Revision

1) What is the basis for a revision of the existing UVLS standards?

The initial input into a revision of the existing UVLS standards is FERC Order No. 693,[8] Paragraph 1509, which directed the ERO to develop a modification of PRC-010-0 that "requires that an integrated and coordinated approach be included in all protection systems on the Bulk-Power System, including generators and transmission lines, generators' low voltage ride through capabilities, and UFLS and UVLS programs." In addition, *The Final Report on the August 14, 2003 Blackout in the United States and Canada: Causes and Recommendations*[9] ("August 14 Blackout Report") showed that proper coordination would have mitigated effects if UVLS was used as a tool.

[4] http://www.nerc.com/_layouts/PrintStandard.aspx?standardnumber=PRC-010-1&title=Undervoltage%20Load%20Shedding.
[5] Adopted by the NERC Board of Trustees on November 14, 2014.
[6] http://www.nerc.com/pa/Stand/Pages/Project-2008-02-Undervoltage-Load-Shedding.aspx
[7] Refer to Project 2010-05.1, which developed PRC-004-3 (Protection System Misoperation Identification and Correction) concurrently with the development of PRC-010-1. (http://www.nerc.com/pa/Stand/Pages/Project 2010-05_Protection_System_Misoperations.aspx).
[8] http://www.nerc.com/docs/docs/ferc/order_693.pdf.
[9] http://energy.gov/sites/prod/files/oeprod/DocumentsandMedia/BlackoutFinal-Web.pdf.

Additional inputs included 1) recommendations from the NERC System Protection and Control Subcommittee (SPCS) in its December 2010 *Technical Review of UVLS-Related Standards*[10] to combine the four existing UVLS standards, revise the applicability to entities responsible for UVLS program design, implementation, and coordination, specifically include a requirement for assessment of coordination between UVLS programs and all other protection systems, and differentiate post-event validation of UVLS program design from verifying correct operation of UVLS equipment; 2) the existing UVLS standards were not in the current results-based format; 3) the preceding revision of the underfrequency load shedding (UFLS) standards had similar types of requirements and had been completed under the construct of a consolidation; and 4) the Independent Expert Review Panel recommendations, which included an evaluation of the existing standards' applicability and level of specificity.

The drafting team agrees that a lack of coordination among protection systems is a key risk to reliability. As part of the revision to address this, the drafting team also agreed that an evaluation and consolidation of the existing UVLS standards was necessary to meet current Reliability Standard development initiatives and to provide clear, comprehensive requirements to address the application and coordination of UVLS.

2) UVLS programs are not mandatory—is compliance for an optional tool necessary?

The drafting team asserts that a key takeaway from the August 14 Blackout Report is that coordination of UVLS with other protection systems could have mitigated the effects if UVLS was used as a tool. Although the use of UVLS is not mandatory, if it is determined that this system preservation measure is necessary to support reliability and a UVLS program is installed, the program needs to be properly coordinated, implemented, and assessed due to the inherent associated reliability risks. As such, there needs to be a level of performance required to properly protect system reliability. Of note, PRC-010-1 and PRC-010-2 apply to the defined term "UVLS Program," which limits the standard's applicability to only those undervoltage-based load shedding programs whose performance has an impact on system reliability.[11]

Coordination with Project 2009-03 Emergency Operations

3) EOP-003-2 has potential redundant requirements with proposed PRC-010-1—how is this being addressed?

As part of its five-year review, Project 2009-03 – Emergency Operations (EOP) identified EOP-003-2 (*Load Shedding Plans*),[12] Requirements R2, R4, and R7 as being more properly covered by

[10] http://www.nerc.com/docs/pc/spctf/PRC-010_022%20Report_Approved_20101208.pdf.
[11] The term "UVLS Program" used herein was adopted by the NERC Board of Trustees on November 14, 2014.
[12] http://www.nerc.com/_layouts/PrintStandard.aspx?standardnumber=EOP-003-2&title=Load%20Shedding%20Plans.

Project 2008-02 – UVLS. Both projects were strategically coordinated to move in lockstep from a timing perspective to address these requirements. Project 2009-03 – EOP proposed to revise and consolidate EOP-001-2.1b (*Emergency Operations Planning*),[13] EOP-002-3 (Capacity and Energy Emergencies),[14] and EOP-003-2 to create EOP-011-1, will retire the noted EOP-003-2 requirements (among other revisions), and the Project 2008-02 – UVLS *Mapping Document* will show how PRC-010-1 encompasses the retired content accordingly. Slated to have aligning effective dates, both EOP-011-1 (*Emergency Operations*)[15] and PRC-010-1 will be posted and balloted separately but concurrently, so that industry stakeholders will be able to clearly evaluate the transition. Please see the posted Project 2008-02 UVLS Project Coordination Plan for more information.

"UVLS Program" Definition

4) Why is the introduction of the new defined term "UVLS Program" necessary?

The drafting team found it necessary to introduce the term "UVLS Program" for inclusion in the *Glossary of Terms Used in NERC Reliability Standards*[16] ("NERC Glossary") because different types of UVLS systems need to be treated appropriately with respect to reliability requirements. Therefore, the term establishes which UVLS systems PRC-010-1 will apply to an: "automatic load shedding program consisting of distributed relays and controls used to mitigate undervoltage conditions impacting the Bulk Electric System (BES), leading to voltage instability, voltage collapse, or Cascading. Centrally controlled undervoltage-based load shedding is not included."

The definition is meant to inherently exclude locally-applied relays that are designed to protect a contained area or, in other words, are not designed to mitigate wide-area voltage collapse. This exclusion is not explicit in these terms in the enforceable language of the definition since the meaning and measurement of "local" or "wide-area" varies greatly on a continent-wide basis and could potentially be interpreted differently by auditors and the applicable functional entities. Therefore, the definition as written is meant to provide flexibility for the Planning Coordinator or Transmission Planner to determine if a UVLS system falls under the defined term with respect to its impact on the reliability of the BES (voltage instability, voltage collapse, or Cascading). To further support the intended exclusion, further discussion and an example are provided on in the PRC-010-1 and PRC-010-2 Guidelines and Technical Basis section under the heading "Guidelines for UVLS Program Definition."

[13] http://www.nerc.com/_layouts/PrintStandard.aspx?standardnumber=EOP-001-2.1b&title=Emergency%20Operations%20Planning.
[14] http://www.nerc.com/_layouts/PrintStandard.aspx?standardnumber=EOP-002-3&title=Capacity%20and%20Energy%20Emergencies.
[15] http://www.nerc.com/_layouts/PrintStandard.aspx?standardnumber=EOP-011-1&title=Emergency%20Operations.
[16] http://www.nerc.com/pa/Stand/Glossary%20of%20Terms/Glossary_of_Terms.pdf.

The definition does explicitly note that the term excludes centrally controlled undervoltage-based load shedding. This type of load shedding is excluded because the drafting team asserts that the design and characteristics of centrally controlled undervoltage-based load shedding are commensurate with those of a Special Protection System (SPS) or Remedial Action Scheme (RAS) and should therefore be subject to SPS or RAS-related Reliability Standards. See PRC-010-1 and PRC-010-2 Guidelines and Technical Basis section under the heading "Guidelines for UVLS Program Definition" for further discussion.

5) If the definition excludes certain types of UVLS, does this preclude an "integrated" approach (FERC Order No. 693, Paragraph 1509)?

The defined term "UVLS Program" clarifies which UVLS systems are subject to the requirements in PRC-010-1 and PRC-010-2. The resulting exclusions from these versions of the standard do not preclude an "integrated" approach because the standard requires that an entity coordinate with all other protection and control systems as necessary, which may include other types of UVLS (i.e., locally-applied UVLS relays and centrally controlled undervoltage-based load shedding).

6) Where will centrally controlled undervoltage-based load shedding be covered?

As explained immediately above, the Requirements of PRC-010-1 and PRC-010-2 are applicable to the proposed NERC Glossary term "UVLS Program," which excludes centrally controlled undervoltage-based load shedding because its design and characteristics are commensurate with those of an SPS or RAS. However, the NERC Glossary during the development of PRC-010-1 definition of "Special Protection System" excluded UVLS. Therefore, the work under Project 2010-05.2 – Special Protection Systems (Phase 2 of Protection Systems) combined the NERC Glossary definition of "Special Protection System" into the single term "Remedial Action Scheme."[17] The definition revisions specifically excluded UVLS Programs, therefore including centrally controlled undervoltage-based shedding.

Consequently, the introduction of the term "UVLS Program" and the conforming revision to the term "Remedial Action Scheme" explicitly clarifies that RAS-related standards are applicable to centrally controlled undervoltage-based load shedding. The implementation plan for the revised definition of "Remedial Action Scheme" will address entities that will have newly identified RAS resulting from the application of the defined term.

Similar to the coordination effort with Project 2009-03 – EOP explained above, Project 2008-02 – UVLS and Project 2010-05.2 – SPS were coordinated to ensure that the effective dates of the adopted definitions of "Remedial Action Scheme" and "UVLS Program," the PRC-010-1 and PRC-010-1 Reliability Standards, and all associated retirements align.

[17] Adopted by the NERC Board of Trustees on November 14, 2014.

7) Is the term "UVLS Program" inclusive of a collection of independent UVLS relays?

No; multiple independent relays do not constitute a program. While the definition stipulates that a UVLS Program consists of distributed relays and controls, the definition specifies that it must be "[a]n automatic load shedding program, consisting of distributed relays and controls, used to mitigate undervoltage conditions impacting the Bulk Electric System(BES), leading to voltage instability, voltage collapse, or Cascading. Centrally controlled undervoltage-based load shedding is not included."

Applicability

8) What is meant by the phrase "Planning Coordinator or Transmission Planner"?

The PRC-010-1 and PRC-010-2 Reliability Standards are applicable to both the Planning Coordinator and Transmission Planner because either may be responsible for designing and coordinating the program based on agreements, memorandums of understanding, or tariffs. The phrase "Planning Coordinator or Transmission Planner" provides the flexibility for applicability to the entity that will perform the action. The expectation is not that both parties will perform the action, but rather that the Planning Coordinator and Transmission Planner will engage in discussion to determine the appropriate responsible entity. In addition, the requirements containing this phrase have specific language to qualify the responsible entity. For example, Requirement R1 states: "Each Planning Coordinator or Transmission Planner *that is developing* a UVLS Program shall . . ." This language provides clarity that the applicable entity would be the one that is developing the program.

9) Why is the Transmission Operator not included?

While the Transmission Operator may be involved with UVLS Program activities, the drafting team did not identify any required performance for the Transmission Operator that was necessary to capture within PRC-010-1 and PRC-010-2, since the Transmission Operator does not have the resources necessary to implement program specifications. If responsibilities are delegated to the Transmission Operator by the Transmission Owner, the Transmission Owner is still the accountable party.

To the extent that the Transmission Operator is required to have knowledge of system relays and protection systems, the drafting team notes that this requirement is covered under PRC-001-1.1 (*System Protection Coordination*),[18] Requirement R1. It is also noted that manual load shedding, for which the Transmission Operator is responsible, is not in the purview of PRC-010-1 and PRC-

[18] http://www.nerc.com/_layouts/PrintStandard.aspx?standardnumber=PRC-001-1.1&title=System%20Protection%20Coordination.

010-2, as it is covered under current EOP-003-2 and will subsequently be covered by proposed EOP-011-1 (see Project 2009-03 – Emergency Operations).

10) What about UVLS schemes owned by Transmission Owners, Distribution Providers, or Transmission Operators that are not required by the planner?

The PRC-010-1 and PRC-010-2 Reliability Standards are applicable to the term "UVLS Program." The drafting team notes that, by its defining attributes, a UVLS Program would be required and developed by a Planning Coordinator or Transmission Planner. The nature of a UVLS scheme developed or required by a Distribution Provider, Transmission Operator, or Transmission Owner would not meet the attributes of the defined term and would therefore not have the design and characteristics necessary to be subject to the requirements of PRC-010-1 and PRC-010-2.

Requirements R1, R3, R4, and R5

11) What is required to evaluate the coordination referenced in Requirement R1, part 1.2?

Requirement R1 requires each Planning Coordinator or Transmission Planner that develops a UVLS Program to evaluate the program's viability and effectiveness prior to implementation. This evaluation should include studies and analyses used when developing the program that show implementation of the program resolves the identified undervoltage issues that led to its design. These studies and analyses should also show that the UVLS Program is integrated through coordination with generator voltage ride-through capabilities and other protection and control systems. As such, the requirement is meant to provide flexibility for an entity to make the proper determinations, including the considerations for coordination, with respect to program effectiveness based on system characteristics. For further guidance on and examples of coordination considerations, please see the portion of the Guidelines and Technical Basis section under the Requirement R1 heading.

12) Requirements R1, R3, and R4 seem to all require evaluations of program effectiveness—how are they different?

Requirements R1, R3, and R4 do require evaluations of program effectiveness, but they are each at distinct points in time.

Requirement R1 requires evaluation of program effectiveness (by way of the qualifying parts) at the onset of program development, or during the initial planning stage, prior to implementation. Requirement R3 requires the same objectives of an evaluation of effectiveness, but at the point of a mandatory periodic review (at least once every 60 calendar months). Requirement R4 addresses the performance of a UVLS Program after an event (for applicable voltage excursion)

to evaluate whether the UVLS Program resolved the undervoltage issues associated with the event.

It is noted that, because of the separate activities of each requirement, UVLS Program deficiencies found as a result of the assessments performed in Requirement R3 or R4 would not be violations of Requirement R1.

13) Requirement R4 would require the Planning Coordinator or Transmission Planner to review all voltage excursions—isn't this unduly burdensome?

While Requirement R4 essentially requires the Planning Coordinator or Transmission Planner to review all voltage excursions to see if they fall below the initializing set points of the UVLS Program, the drafting team contends that it will be clearly evident if voltage falls below the UVLS threshold because either a) UVLS devices will operate; or b) the system will experience the adverse conditions the UVLS Program was installed to mitigate.

In addition, the drafting team acknowledges that the Planning Coordinator or Transmission Planner may not have the ability to know when voltage excursions are occurring since they are not operating entities. However, a process for the Transmission Operator, Transmission Owner, or Distribution Provider to notify the Transmission Planner or Planning Coordinator of such voltage excursion events is consistent with standard utility practice.

14) PRC-022-1 required the analysis of UVLS Misoperations. How is this addressed in PRC-010-1?

One of the recommendations in the SPCS report was to clearly differentiate between the post-event process of validating the effectiveness of the UVLS program design, its coordination with other protection and control systems, and the potential need to modify the program design (activities addressed in PRC-010-1) and the process of verifying correct operation of UVLS equipment. Because PRC-010-1 was not specific concerning the Misoperation of UVLS equipment, the drafting team made a subsequent revision creating PRC-010-2. Version two (PRC-010-2) now requires that the assessment according to Requirement R4 include the performance (i.e., operation or non-operation) of the UVLS Program equipment.

Relative to the assessment, Requirement R5 requires that a Corrective Action Plan be developed to address any identified deficiencies. This structure ensures that UVLS Program equipment is assessed to identify any Misoperation which could affect BES reliability. Although, the UVLS drafting team maintained during development of PRC-010-1 that verifying correct operation of UVLS equipment should be addressed in PRC-004, the drafting team included UVLS that is intended to trip one or more BES Elements in the proposed PRC-004-5.

Requirements R6, R7, and R8

15) Do Requirements R6, R7, and R8 overlap with the requirements of MOD-032-1?

While both MOD-032-1 (*Data for Power System Modeling and Analysis*)[19] and Requirements R6, R7, and R8 of PRC-010-1 and PRC-010-2 address data requirements, MOD-032-1 establishes overarching modeling data requirements with respect to consistency in format and reporting procedures, whereas the PRC-010-1 and PRC-010-2 requirements address the need to maintain and share data and databases for the purposes of studies for use in event analyses for UVLS Programs specifically. While Reliability Standards in general may have overlap in this manner, the activities in these requirements remain distinctly different.

16) Requirements R6, R7, and R8 appear to be administrative — doesn't this conflict with Paragraph 81 criteria?[20]

Proper maintenance and timely sharing of UVLS Program data as required by Requirements R6, R7, and R8 is necessary to inform the Planning Coordinator or Transmission Planner's studies and analyses. While administrative tasks are required, the tasks have a core reliability-based need.

In addition, Requirements R6, R7, and R8 were written to emulate FERC-approved PRC-006-2 (*Automatic Underfrequency Load Shedding*)[21,22] data requirements. While some of these analogous requirements in PRC-006-2 are listed as candidates for Phase 2 of the Paragraph 81 project, they are not yet approved as meeting the criteria; furthermore, the Independent Expert Review Panel has recommended that these Paragraph 81 candidates not be included for deletion, citing that "there should be a clear expectation for Planning Coordinators to share data necessary to determine their UFLS program parameters."

[19] http://www.nerc.com/_layouts/PrintStandard.aspx?standardnumber=MOD-032-1&title=Data%20for%20Power%20System%20Modeling%20and%20Analysis.
[20] Refer to Standards Independent Expert Review Project (IERP). http://www.nerc.com/pa/Stand/Standard%20Development%20Plan/Standards_Independent_Experts_Review_Project_Report-SOTC_and_Board.pdf.
[21] http://www.nerc.com/_layouts/PrintStandard.aspx?standardnumber=PRC-006-2&title=Automatic%20Underfrequency%20Load%20Shedding.
[22] Adopted by the NERC Board of Trustees on November 14, 2014.

NERC
NORTH AMERICAN ELECTRIC RELIABILITY CORPORATION

Implementation Plan

PRC-010-2 – Undervoltage Load Shedding

Project 2008-02.2 – Phase 2 UVLS: Misoperations

Requested Approvals

- PRC-010-2 – Undervoltage Load Shedding

Requested Retirements

- PRC-010-1 – Undervoltage Load Shedding[1]

Prerequisite Approvals

- PRC-004-5 — Protection System Misoperation Identification and Correction

General Considerations

The implementation period is intended to align with the Effective Date of PRC-010-1 or occur soon thereafter in order to incorporate certain aspects of PRC-022-1 – Under-Voltage Load Shedding Program Performance into PRC-010-2. PRC-022-1 was retired by PRC-010-1. The Implementation Plan for PRC-010-1[2] allows twelve (12) calendar months after applicable approvals. Version five of PRC-004 is including undervoltage load shedding (UVLS) that is intended to trip one or more BES Elements.

Applicable Entities

- Planning Coordinator
- Transmission Planner
- Undervoltage load shedding (UVLS) entities – Distribution Providers and Transmission Owners responsible for the ownership, operation, or control of UVLS equipment as required by the UVLS Program established by the Transmission Planner or Planning Coordinator

Effective Dates

PRC-010-2 shall become effective on the later of the first day following the Effective Date of PRC-010-1 or the first day of the first calendar quarter after the standard is approved by an applicable governmental authority or as otherwise provided for in a jurisdiction where approval by an applicable governmental authority is required for a standard to go into effect. Where approval by an applicable governmental authority is not required, the standard shall become effective on the later of the first day following the Effective Date of PRC-010-1 or the first day of the first calendar quarter after the date the standard is adopted by the NERC Board of Trustees or as otherwise provided for in that jurisdiction.

[1] PRC-010-1 was adopted by the NERC Board of Trustees on November 13, 2014.

[2] Refer to Project 2008-02.2 on the NERC website. (http://www.nerc.com/pa/Stand/Pages/Project-2008-02_2-Phase-2-Undervoltage-Load-Shedding-UVLS-Misoperations.aspx)

NERC
NORTH AMERICAN ELECTRIC RELIABILITY CORPORATION

Implementation Plan

PRC-010-2 – Undervoltage Load Shedding

Project 2008-02.2 – Phase 2 UVLS: Misoperations

Requested Approvals

- PRC-010-2 – Undervoltage Load Shedding

Requested Retirements

- PRC-010-1 – Undervoltage Load Shedding[1]

Prerequisite Approvals

- PRC-004-5 — Protection System Misoperation Identification and Correction

General Considerations

The implementation period is intended to align with the Effective Date of PRC-010-1 or occur soon thereafter in order to incorporate certain aspects of PRC-022-1 – Under-Voltage Load Shedding Program Performance into PRC-~~004~~010-2. PRC-022-1 was retired by PRC-010-1. The Implementation Plan for PRC-010-1[2] allows twelve (12) calendar months after applicable approvals. Version five of PRC-004 is including undervoltage load shedding (UVLS) that is intended to trip one or more BES Elements.

Applicable Entities

- Planning Coordinator
- Transmission Planner
- Undervoltage load shedding (UVLS) entities – Distribution Providers and Transmission Owners responsible for the ownership, operation, or control of UVLS equipment as required by the UVLS Program established by the Transmission Planner or Planning Coordinator

Effective Dates

PRC-010-2 shall become effective on the later of the first day following the Effective Date of PRC-010-1 or the first day of the first calendar quarter after the standard is approved by an applicable governmental authority or as otherwise provided for in a jurisdiction where approval by an applicable governmental authority is required for a standard to go into effect. Where approval by an applicable governmental authority is not required, the standard shall become effective on the later of the first day following the Effective Date of PRC-010-1 or the first day of the first calendar quarter after the date the standard is adopted by the NERC Board of Trustees or as otherwise provided for in that jurisdiction.

[1] PRC-010-1 was adopted by the NERC Board of Trustees on November 13, 2014.

[2] Refer to Project 2008-02.2 on the NERC website. (http://www.nerc.com/pa/Stand/Pages/Project-2008-02_2-Phase-2-Undervoltage-Load-Shedding-UVLS-Misoperations.aspx)

NERC
NORTH AMERICAN ELECTRIC RELIABILITY CORPORATION

Mapping Document

Project 2008-02.2 Phase 2: Undervoltage Load Shedding

During development of PRC-010-1, the standard drafting team provided the following explanation on its approach to cover Misoperation of UVLS equipment in future work:

> "As PRC-022-1 addresses UVLS equipment Misoperations, the UVLS drafting team's intention is for PRC-004 to address Misoperations of UVLS Program equipment. A change to make PRC-004 explicitly applicable to UVLS Program equipment will be addressed once PRC-004-3 – Protection System Misoperation Identification and Correction[1] is completed under Project 2010-05.1 – Misoperations (Phase 1 of Protection Systems)."

The table below demonstrates how proposed changes map from the retirement of PRC-022-1 (retired by the initial 2008-02 project) to the proposed PRC-010-2. The revisions are being proposed to provide additional clarity with the aligning revisions being proposed in PRC-004-5 as shown in Table 2.

[1] PRC-004-3 was surpassed by version four which addressed applicability to dispersed generation resources under Project 2014-01.

Table 1: Mapping PRC-022-1 to PRC-010-2		
Requirement in Approved PRC-022-1 Reliability Standard	**Translation to New Standard or Other Action**	**Proposed Language in PRC-010-2 or Comments**
R1. Each Transmission Operator, Load-Serving Entity, and Distribution Provider that operates a UVLS program to mitigate the risk of voltage collapse or voltage instability in the BES shall **analyze and document all UVLS operations and Misoperations**. The analysis shall include:* **R1.5** For any Misoperation, a Corrective Action Plan to avoid future Misoperations of a similar nature. *Sub-requirements R1.1 through R1.4 have been omitted because they were addressed in Project 2008-02 during development of PRC-010-1.	PRC-010-2 proposes Part 4.2 to provide additional clarity that UVLS equipment operations and Misoperations are addressed by Requirement R4 through the Planning Coordinator or Transmission Planner assessment. Part 4.1 was originally embedded in the main Requirement R4 of PRC-010-1 and is now shown as a new Part 4.1 now. Part 4.2 is being proposed to provide the necessary clarity that the assessment conducted following an event that resulted in a voltage excursion for which its UVLS Program was designed to operate must include UVLS Program equipment.	**R4.** Each Planning Coordinator or Transmission Planner shall, within 12 calendar months of an event that resulted in a voltage excursion for which its UVLS Program was designed to operate, perform an assessment to evaluate: **4.1.** whether its UVLS Program resolved the undervoltage issues associated with the event, and **(Proposed) 4.2.** the performance (i.e., operation and non-operation) of the UVLS Program equipment.

Table 1: Mapping PRC-022-1 to PRC-010-2		
Requirement in Approved PRC-022-1 Reliability Standard	**Translation to New Standard or Other Action**	**Proposed Language in PRC-010-2 or Comments**
	Part 4.2 requires the Planning Coordinator or Transmission Planner to assess the UVLS equipment performance and address any deficiencies in a Corrective Action Plan (CAP) as required by PRC-010-2, Requirement R5. The clause "in its UVLS Program" was removed to clarify the Corrective Action Plan is addressing components of the assessment, which is about the UVLS Program.	**R5.** Each Planning Coordinator or Transmission Planner that identifies deficiencies during an assessment performed in either Requirement R3 or R4 shall develop a Corrective Action Plan to address the deficiencies and subsequently provide the Corrective Action Plan, including an implementation schedule, to UVLS entities within three calendar months of completing the assessment.

Table 2: Mapping PRC-022-1 to PRC-004-5		
Requirement in Approved PRC-022-1 Reliability Standard	**Translation to New Standard or Other Action**	**Proposed Language in PRC-004-5 or Comments**
R1. Each Transmission Operator, Load-Serving Entity, and Distribution Provider that operates a UVLS program to mitigate the risk of voltage collapse or voltage instability in the BES shall **analyze and document all UVLS operations and Misoperations**. The analysis shall include:* **R1.5** For any Misoperation, a Corrective Action Plan to avoid future Misoperations of a similar nature. *Sub-requirements R1.1 through R1.4 have been omitted because they were addressed in Project 2008-02 during development of PRC-010-1.	The proposed Applicability 4.2.3 addresses the clause "analyze and document all UVLS operations and Misoperations" in PRC-022-1, Requirement R1. The standard PRC-004-5, Requirement R5 requires a Corrective Action Plan (CAP) to be developed for a known cause of a Misoperation and addresses Requirement R1.5. Requirement R6 requires the implementation of the CAP.	**(Proposed) 4.2.3** Undervoltage load shedding (UVLS) that is intended to trip one or more BES Elements. **R5.** Each Transmission Owner, Generator Owner, and Distribution Provider that owns the Protection System component(s) that caused the Misoperation shall, within 60 calendar days of first identifying a cause of the Misoperation: [Violation Risk Factor: Medium] [Time Horizon: Operations Planning, Long-Term Planning] • Develop a Corrective Action Plan (CAP) for the identified Protection System component(s), and an evaluation of the CAP's applicability to the entity's other Protection Systems including other locations; or

Table 2: Mapping PRC-022-1 to PRC-004-5		
Requirement in Approved PRC-022-1 Reliability Standard	**Translation to New Standard or Other Action**	**Proposed Language in PRC-004-5 or Comments**
		• Explain in a declaration why corrective actions are beyond the entity's control or would not improve BES reliability, and that no further corrective actions will be taken. **R6.** Each Transmission Owner, Generator Owner, and Distribution Provider shall implement each CAP developed in Requirement R5, and update each CAP if actions or timetables change, until completed.

Mapping Document
Project 2008-02.2 Phase 2: Undervoltage Load Shedding

During development of PRC-010-1, the standard drafting team provided the following explanation on its approach to cover Misoperation of UVLS equipment in future work:

> "As PRC-022-1 addresses UVLS equipment Misoperations, the UVLS drafting team's intention is for PRC-004 to address Misoperations of UVLS Program equipment. A change to make PRC-004 explicitly applicable to UVLS Program equipment will be addressed once PRC-004-3 – Protection System Misoperation Identification and Correction[1] is completed under Project 2010-05.1 – Misoperations (Phase 1 of Protection Systems)."

~~Table~~The table below demonstrates how proposed changes map from the retirement of PRC-022-1 (retired by the initial 2008-02 project) to the proposed PRC-010-2. The revisions are being proposed to provide additional clarity with the aligning revisions being proposed in PRC-004-5 as shown in Table 2.

[1] PRC-004-3 was surpassed by version four which addressed applicability to dispersed generation resources under Project 2014-01.

Table 1: Mapping PRC-022-1 to PRC-010-2		
Requirement in Approved PRC-022-1 Reliability Standard	**Translation to New Standard or Other Action**	**Proposed Language in PRC-010-2 or Comments**
R1. Each Transmission Operator, Load-Serving Entity, and Distribution Provider that operates a UVLS program to mitigate the risk of voltage collapse or voltage instability in the BES shall **analyze and document all UVLS operations and Misoperations**. The analysis shall include:* **R1.5** For any Misoperation, a Corrective Action Plan to avoid future Misoperations of a similar nature. *Sub-requirements R1.1 through R1.4 have been omitted because they were addressed in Project 2008-02 during development of PRC-010-1.	PRC-010-2 proposes Part 4.2 to provide additional clarity that UVLS equipment operations and Misoperations are addressed by Requirement R4 through the Planning Coordinator or Transmission Planner assessment. Part 4.1 was originally embedded in the main Requirement R4 of PRC-010-1 and is now shown as a new Part 4.1 now. Part 4.2 is being proposed to provide the necessary clarity that the assessment conducted following an event that resulted in a voltage excursion for which its UVLS Program was designed to operate must include UVLS Program equipment.	**R4.** Each Planning Coordinator or Transmission Planner shall, within 12 calendar months of an event that resulted in a voltage excursion for which its UVLS Program was designed to operate, perform an assessment to evaluate: **4.1.** whether its UVLS Program resolved the undervoltage issues associated with the event, and **(Proposed) 4.2.** the performance (i.e., operation and non-operation) of the UVLS Program equipment.

Table 1: Mapping PRC-022-1 to PRC-010-2		
Requirement in Approved PRC-022-1 Reliability Standard	**Translation to New Standard or Other Action**	**Proposed Language in PRC-010-2 or Comments**
	Part 4.2 requires the Planning Coordinator or Transmission Planner to assess the UVLS equipment performance and address any deficiencies in a Corrective Action Plan (CAP) as required by PRC-010-2, Requirement R5. The clause "in its UVLS Program" was removed to clarify the Corrective Action Plan is addressing components of the assessment, which is about the UVLS Program.	**R5.** Each Planning Coordinator or Transmission Planner that identifies deficiencies during an assessment performed in either Requirement R3 or R4 shall develop a Corrective Action Plan to address the deficiencies and subsequently provide the Corrective Action Plan, including an implementation schedule, to UVLS entities within three calendar months of completing the assessment. ~~[Violation Risk Factor: Medium] [Time Horizon: Operations Planning]~~

Table 2: Mapping PRC-022-1 to PRC-004-5		
Requirement in Approved PRC-022-1 Reliability Standard	**Translation to New Standard or Other Action**	**Proposed Language in PRC-004-5 or Comments**
R1. Each Transmission Operator, Load-Serving Entity, and Distribution Provider that operates a UVLS program to mitigate the risk of voltage collapse or voltage instability in the BES shall **analyze and document all UVLS operations and Misoperations**. The analysis shall include:* **R1.5** For any Misoperation, a Corrective Action Plan to avoid future Misoperations of a similar nature. *Sub-requirements R1.1 through R1.4 have been omitted because they were addressed in Project 2008-02 during development of PRC-010-1.	The proposed Applicability 4.2.3 addresses the clause "analyze and document all UVLS operations and Misoperations~~."~~" in PRC-022-1, Requirement R1. The standard PRC-004-5, Requirement R5 requires a Corrective Action Plan (CAP) to be developed for a known cause of a Misoperation and addresses Requirement R1.5. Requirement R6 requires the implementation of the CAP.	**(Proposed) 4.2.3** Undervoltage load shedding (UVLS) that is intended to trip one or more BES Elements. **R5.** Each Transmission Owner, Generator Owner, and Distribution Provider that owns the Protection System component(s) that caused the Misoperation shall, within 60 calendar days of first identifying a cause of the Misoperation: [Violation Risk Factor: Medium] [Time Horizon: Operations Planning, Long-Term Planning] • Develop a Corrective Action Plan (CAP) for the identified Protection System component(s), and an evaluation of the CAP's applicability to the entity's other Protection Systems including other locations; or

Table 2: Mapping PRC-022-1 to PRC-004-5		
Requirement in Approved PRC-022-1 Reliability Standard	**Translation to New Standard or Other Action**	**Proposed Language in PRC-004-5 or Comments**
		• Explain in a declaration why corrective actions are beyond the entity's control or would not improve BES reliability, and that no further corrective actions will be taken. **R6.** Each Transmission Owner, Generator Owner, and Distribution Provider shall implement each CAP developed in Requirement R5, and update each CAP if actions or timetables change, until completed.

NERC
NORTH AMERICAN ELECTRIC RELIABILITY CORPORATION

Violation Risk Factors and Violation Severity Level Justifications

PRC-004-3 – Protection System Misoperation Identification and Correction

Project 2010-05.1 – Protection System (Misoperations)

Violation Risk Factor and Violation Severity Level Justifications

This document provides the drafting team's justification for assignment of violation risk factors (VRFs) and violation severity levels (VSLs) for each requirement in: PRC-004-3 – Protection System Misoperation Identification and Correction.

Each primary requirement is assigned a VRF and a set of one or more VSLs. These elements support the determination of an initial value range for the base penalty amount regarding violations of requirements in FERC-approved Reliability Standards, as defined in the ERO Sanction Guidelines.

The Protection System Misoperations Standard Drafting Team applied the following NERC criteria and FERC Guidelines when proposing VRFs and VSLs for the requirements under this project.

NERC Criteria - Violation Risk Factors

High Risk Requirement

A requirement that, if violated, could directly cause or contribute to bulk electric system instability, separation, or a cascading sequence of failures, or could place the bulk electric system at an unacceptable risk of instability, separation, or cascading failures; or, a requirement in a planning time frame that, if violated, could, under emergency, abnormal, or restorative conditions anticipated by the preparations, directly cause or contribute to bulk electric system instability, separation, or a cascading sequence of failures, or could place the bulk electric system at an unacceptable risk of instability, separation, or cascading failures, or could hinder restoration to a normal condition.

Medium Risk Requirement

A requirement that, if violated, could directly affect the electrical state or the capability of the bulk electric system, or the ability to effectively monitor and control the bulk electric system. However, violation of a medium risk requirement is unlikely to lead to bulk electric system instability, separation, or cascading failures; or, a requirement in a planning time frame that, if

violated, could, under emergency, abnormal, or restorative conditions anticipated by the preparations, directly and adversely affect the electrical state or capability of the bulk electric system, or the ability to effectively monitor, control, or restore the bulk electric system. However, violation of a medium risk requirement is unlikely, under emergency, abnormal, or restoration conditions anticipated by the preparations, to lead to bulk electric system instability, separation, or cascading failures, nor to hinder restoration to a normal condition.

Lower Risk Requirement

A requirement that is administrative in nature and a requirement that, if violated, would not be expected to adversely affect the electrical state or capability of the bulk electric system, or the ability to effectively monitor and control the bulk electric system; or, a requirement that is administrative in nature and a requirement in a planning time frame that, if violated, would not, under the emergency, abnormal, or restorative conditions anticipated by the preparations, be expected to adversely affect the electrical state or capability of the bulk electric system, or the ability to effectively monitor, control, or restore the bulk electric system. A planning requirement that is administrative in nature.

FERC Violation Risk Factor Guidelines

The standard drafting team (SDT) also considered consistency with the FERC Violation Risk Factor Guidelines for setting VRFs:[1]

Guideline (1) — Consistency with the Conclusions of the Final Blackout Report

The Commission seeks to ensure that Violation Risk Factors assigned to Requirements of Reliability Standards in these identified areas appropriately reflect their historical critical impact on the reliability of the Bulk-Power System.

In the VRF Order, FERC listed critical areas (from the Final Blackout Report) where violations could severely affect the reliability of the Bulk-Power System: [2]

- Emergency operations
- Vegetation management
- Operator personnel training
- Protection systems and their coordination

[1] *N. Am. Elec. Reliability Corp.*, 119 FERC ¶ 61,145 (2007) ("VRF Order"), *order on reh'g and compliance filing*, 120 FERC ¶ 61,145 (2007) ("VRF Rehearing Order").
[2] *Id.* at fn 15.

- Operating tools and backup facilities
- Reactive power and voltage control
- System modeling and data exchange
- Communication protocol and facilities
- Requirements to determine equipment ratings
- Synchronized data recorders
- Clearer criteria for operationally critical facilities
- Appropriate use of transmission loading relief

Guideline (2) — Consistency within a Reliability Standard

The Commission expects a rational connection between the sub-Requirement Violation Risk Factor assignments and the main Requirement Violation Risk Factor assignment.

Guideline (3) — Consistency among Reliability Standards

The Commission expects the assignment of Violation Risk Factors corresponding to Requirements that address similar reliability goals in different Reliability Standards would be treated comparably.

Guideline (4) — Consistency with NERC's Definition of the Violation Risk Factor Level

Guideline (4) was developed to evaluate whether the assignment of a particular Violation Risk Factor level conforms to NERC's definition of that risk level.

Guideline (5) — Treatment of Requirements that Co-mingle More Than One Obligation

Where a single Requirement co-mingles a higher risk reliability objective and a lesser risk reliability objective, the VRF assignment for such Requirements must not be watered down to reflect the lower risk level associated with the less important objective of the Reliability Standard.

VRF Discussion

The discussion below in the tables addresses how the SDT considered FERC's VRF Guidelines 1 through 5. PRC-004-3 – Protection System Misoperation Identification and Correction is a

revision of PRC-004-2.1a – Analysis and Mitigation of Transmission and Generation Protection System Misoperations and combines the reliability intent of the two legacy standards PRC-003-1 and PRC-004-2.1a.

The proposed PRC-004-3 Reliability Standard has six (6) discrete requirements that incorporate and enhance the intent of the requirements of PRC-004-2.1a and PRC-003-1.[3] First, the revised standard requires the Transmission Owner, Generator Owner, and Distribution Provider to review each BES interrupting device operation meeting the criteria in Requirement R1, which includes: when caused by a Protection System operation or by manual intervention in response to a Protection System failure to operate and identify each that is a Misoperation; regardless of whether the BES interrupting device owner owns all or part of the Composite Protection System; and when BES interrupting device owner identified that its Protection System component(s) caused the BES interrupting device(s) operation.

Second, the BES interrupting device owner is required to notify the other Composite Protection System component owner(s) when the criteria in Requirement R2 are met, which includes: Composite Protection System ownership is shared with another owner; the BES interrupting device owner determined that a Misoperation occurred or cannot rule out a Misoperation; and the BES interrupting device owner determined that its Protection System component(s) did not cause the BES interrupting device(s) operation or is unsure.

Third, if a Transmission Owner, Generator Owner, or Distribution Provider is notified by a BES interrupting device owner that the Composite Protection System operated, it must review the operation according to Requirement R3. In most cases, Requirement R1 or R3 will reveal the cause of the Misoperation. If not, Requirement R4 mandates the entity perform investigative action(s) to determine the cause(s) as the fourth discrete Requirement. If a cause is not identified, the entity either may continue its investigation until a cause is identified or the entity may write a declaration that no cause was identified. If a cause is identified, the entity advances to the fifth Requirement.

In Requirement R5, the entity whose Protection System component was identified as the cause of the Misoperation must either develop a Corrective Action Plan (CAP) or explain in a declaration why it cannot correct the cause of the Misoperation. In developing a Corrective Action Plan (CAP) for the identified Protection System component(s), the entity must perform an evaluation of the CAP's applicability to the entity's other Protection Systems including other locations. If the entity determines that corrective actions are beyond the entity's control or would not improve BES reliability, it must explain this in a declaration why no further corrective actions will be taken.

In the last Requirement R6, the entity must implement and complete the CAP. The entity must update the CAP during implementation when actions or timetables change.

[3] The Reliability Standard PRC-003-1 – Regional Procedure for Analysis of Misoperations of Transmission and Generation Protection Systems requires Regional Entities to establish procedures for analysis of Misoperations.

The requirements of the proposed PRC-004-3 do not map, one-to-one, with the Requirements of the two legacy standards, PRC-003-1 and PRC-004-2.1a. The new Requirements comingle various reliability attributes of the legacy standards with precise reliability objectives. In developing the new VRFs for the Requirements of PRC-004-3, the Standard Drafting Team carefully considered the NERC criteria for developing VRFs, as well as the FERC VRF guidelines. The VRFs of the FERC approved PRC-004-2.1a – Analysis and Mitigation of Transmission and Generation Protection System Misoperations (R1 & R2 – High VRF), PRC-004-WECC-1 – Protection System and Remedial Action Scheme Misoperation (R1 – Lower VRF), PRC-016-0.1 – Special Protection System Misoperation (R2 – Medium VRF), and PRC-022-1 – Under-Voltage Load Shedding Program Performance (R1 & R1.5 – Medium VRF), all influenced (citing FERC VRF Guideline 3) the drafting team's VRF decisions, as such, the VRFs for PRC-004-3 Requirements R1 through R6 are assigned a VRF of Medium.

NERC Criteria - Violation Severity Levels

Violation Severity Levels (VSLs) define the degree to which compliance with a requirement was not achieved. Each requirement must have at least one VSL. While it is preferable to have four VSLs for each requirement, some requirements do not have multiple "degrees" of noncompliant performance and may have only one, two, or three VSLs.

Violation severity levels should be based on the guidelines shown in the table below:

Lower	Moderate	High	Severe
Missing a minor element (or a small percentage) of the required performance The performance or product measured has significant value as it almost meets the full intent of the requirement.	Missing at least one significant element (or a moderate percentage) of the required performance. The performance or product measured still has significant value in meeting the intent of the requirement.	Missing more than one significant element (or is missing a high percentage) of the required performance or is missing a single vital component. The performance or product has limited value in meeting the intent of the requirement.	Missing most or all of the significant elements (or a significant percentage) of the required performance. The performance measured does not meet the intent of the requirement or the product delivered cannot be used in meeting the intent of the requirement.

FERC Order on Violation Severity Levels

In its June 19, 2008 Order on Violation Severity Levels, FERC indicated it would use the following four guidelines for determining whether to approve VSLs:

Guideline 1: Violation Severity Level Assignments Should Not Have the Unintended Consequence of Lowering the Current Level of Compliance

Compare the VSLs to any prior Levels of Non-compliance and avoid significant changes that may encourage a lower level of compliance than was required when Levels of Non-compliance were used.

Guideline 2: Violation Severity Level Assignments Should Ensure Uniformity and Consistency in the Determination of Penalties

Guideline 2a: A violation of a "binary" type requirement must be a "Severe" VSL.

Guideline 2b: Do not use ambiguous terms such as "minor" and "significant" to describe noncompliant performance.

Guideline 3: Violation Severity Level Assignment Should Be Consistent with the Corresponding Requirement

VSLs should not expand on what is required in the requirement.

Guideline 4: Violation Severity Level Assignment Should Be Based on A Single Violation, Not on A Cumulative Number of Violations

. . . unless otherwise stated in the requirement, each instance of non-compliance with a requirement is a separate violation. Section 4 of the Sanction Guidelines states that assessing penalties on a per violation per day basis is the "default" for penalty calculations.

VRF and VSL Justifications – PRC-004-3, R1	
Proposed VRF	**Medium**
NERC VRF Discussion	A Violation Risk Factor of Medium is consistent with the NERC VRF Guidelines. Failure to review each BES interrupting device operation caused by a Protection System operation or by manual intervention in response to a Protection System failure to operate for Misoperation could, in the planning time frame, under emergency, abnormal, or restorative conditions anticipated by the preparations, directly and adversely affect the electrical state or capability of the bulk electric system, or the ability to effectively monitor, control, or restore the bulk electric system. Composite Protection System operations reviewed for proper operation by an owner is the first step in preventing the future severity of disturbances affecting a wider area, or potential equipment damage. However, violation of this requirement is not in itself likely to lead to bulk electric system instability, separation, or cascading failures.
FERC VRF G1 Discussion	Guideline 1- Consistency w/ Blackout Report: The blackout report and subsequent technical analysis noted that zone 3 relays increased the severity of the blackout. Reviewing Protection Systems for Misoperation, identifying an unnecessary operation and taking corrective actions would reduce the likelihood of reoccurrence. This requirement is consistent with Recommendation 8: Improve System Protection to Slow or Limit the Spread of Future Cascading Outages.
FERC VRF G2 Discussion	Guideline 2- Consistency within a Reliability Standard: This requirement has a single reliability activity associated with the reliability objective and no sub-Requirement(s) which allows a single VRF to be assigned; therefore no conflict(s) exist.
FERC VRF G3 Discussion	Guideline 3- Consistency among Reliability Standards:

VRF and VSL Justifications – PRC-004-3, R1	
	This requirement replaces one of the three performance components of PRC-004-2a, R1 (TO & DP) and R2 (GO), which both have a VRF of "High." The three performance components (paraphrased) are "analyze Protection System Misoperations," "develop a Correction Action Plan," and "implement a Corrective Action Plan". The performance activity that has been isolated in Requirement R1 of PRC-004-3, to "review" (similar to "analyze"), is consistent with similar requirements in Reliability Standards PRC-016-0.1 – Special Protection System Misoperations, R1 ("…shall analyze its SPS operations and maintain a record of all misoperations…") and PRC-022-1 – Under-Voltage Load Shedding Program Performance, R1 ("…shall analyze and document all UVLS operations and Misoperations.") which both have a VRF of Medium. A VRF of Medium does not inadvertently lower the current VRF of High in the former PRC-004-2.1a, Requirements R1 and R2, because this Requirement now provides a clear and concise single reliability activity whereas the former Requirement comingles multiple activities
FERC VRF G4 Discussion	Guideline 4- Consistency with NERC Definitions of VRFs: Failure to review each BES interrupting device operation caused by a Protection System operation or by manual intervention in response to a Protection System failure to operate for Misoperation could, in the planning time frame, under emergency, abnormal, or restorative conditions anticipated by the preparations, directly and adversely affect the electrical state or capability of the bulk electric system, or the ability to effectively monitor, control, or restore the bulk electric system. Protection System operations reviewed for proper operation by their owner(s) is the first step in preventing the future severity of disturbances affecting a wider area, or potential equipment damage.
FERC VRF G5 Discussion	Guideline 5- Treatment of Requirements that Co-mingle More than One Obligation: This requirement does not co-mingle reliability objectives of differing risk; therefore, the assigned VRF of Medium is consistent.

VRF and VSL Justifications – PRC-004-3, R1			
Proposed VSL			
Lower	**Moderate**	**High**	**Severe**
The responsible entity identified whether its Protection System component(s) caused a Misoperation in accordance with Requirement R1, but in more than 120 calendar days and less than or equal to 150 calendar days of the BES interrupting device operation.	The responsible entity identified whether its Protection System component(s) caused a Misoperation in accordance with Requirement R1, but in more than 150 calendar days and less than or equal to 165 calendar days of the BES interrupting device operation.	The responsible entity identified whether its Protection System component(s) caused a Misoperation in accordance with Requirement R1, but in more than 165 calendar days and less than or equal to 180 calendar days of the BES interrupting device operation.	The responsible entity identified whether its Protection System component(s) caused a Misoperation in accordance with Requirement R1, but in more than 180 calendar days of the BES interrupting device operation. OR The responsible entity failed to identify whether its Protection System component(s) caused a Misoperation in accordance with Requirement R1.
NERC VSL Guidelines	Meets NERC's VSL Guidelines—There is an incremental aspect to the VSL for tardiness and a binary aspect for failure. The VSL is entity size-neutral because performance is event-driven and not by individual assets.		

VRF and VSL Justifications – PRC-004-3, R1	
FERC VSL G1 Violation Severity Level Assignments Should Not Have the Unintended Consequence of Lowering the Current Level of Compliance	This requirement replaces one of the three performance components of PRC-004-2a, R1 (TO & DP) and R2 (GO). The three performance components (paraphrased) are “analyze Protection System Misoperations,” “develop a Correction Action Plan,” and “implement a Corrective Action Plan.” The VSLs are based on the three components and not individually as presented in the proposed PRC-004-3 standard. This VSL does not lower the current level of compliance because the former VSL was comingled with the other activities. The VSLs appropriately assess the severity of the violation with the failure to perform a review for Misoperation as Severe.
FERC VSL G2 Violation Severity Level Assignments Should Ensure Uniformity and Consistency in the Determination of Penalties Guideline 2a: The Single Violation Severity Level Assignment Category for "Binary" Requirements Is Not Consistent Guideline 2b: Violation Severity Level Assignments that Contain Ambiguous Language	Guideline 2a: This requirement is not binary; therefore, this criterion does not apply. Guideline 2b: This VSL does not use any ambiguous terminology, thereby supporting uniformity and consistency in the determination of similar penalties for similar violations.
FERC VSL G3	This VSL uses similar terminology to that used in the associated requirement, and is therefore consistent with this Requirement.

VRF and VSL Justifications – PRC-004-3, R1	
Violation Severity Level Assignment Should Be Consistent with the Corresponding Requirement	
FERC VSL G4 Violation Severity Level Assignment Should Be Based on A Single Violation, Not on A Cumulative Number of Violations	The VSL is based on a single violation and not cumulative violations.

VRF and VSL Justifications – PRC-004-3, R2	
Proposed VRF	**Medium**
NERC VRF Discussion	A Violation Risk Factor of Medium is consistent with the NERC VRF Guidelines. Failure to notify the other owner(s) of a Composite Protection System when the initiating owner determined its Protection System components did not cause a Misoperation or it did not rule out a Misoperation, could in the planning time frame, under emergency, abnormal, or restorative conditions anticipated by the preparations, directly and adversely affect the electrical state or capability of the bulk electric system, or the ability to effectively monitor, control, or restore the bulk electric system.

VRF and VSL Justifications – PRC-004-3, R2	
	Unresolved Misoperations of Composite Protection Systems owned by others that are not ruled out as a Misoperation could affect the electrical state or capability of the bulk electric system, or the ability to effectively monitor, control, or restore the bulk electric system by creating a gap in analysis.
FERC VRF G1 Discussion	Guideline 1- Consistency w/ Blackout Report: This is consistent with Recommendation 8: Improve System Protection to Slow or Limit the Spread of Future Cascading Outages. A lack of coordination on system protection was one of eight factors common to substantive outages prior to and including the August 14, 2003 Blackout. The initiating entity in the planning time frame is required to notify the other owner(s) of the Composite Protection System component(s) when it determines that (or is unsure whether)its component(s) did not cause a Misoperation or when it is unable to rule out a Misoperation of the Composite Protection System owned by others. This ensures that all owners review their equipment for proper operation which may include checking for proper coordination depending on the circumstances.
FERC VRF G2 Discussion	Guideline 2- Consistency within a Reliability Standard: This requirement has a single reliability activity associated with the reliability objective and no sub-Requirement(s) which allows a single VRF to be assigned; therefore no conflict(s) exist.
FERC VRF G3 Discussion	Guideline 3- Consistency among Reliability Standards:

VRF and VSL Justifications – PRC-004-3, R2	
	This requirement replaces one of the three performance components of PRC-004-2a, R1 (TO & DP) and R2 (GO), which both have a VRF of High. The three performance components (paraphrased) are "analyze Protection System Misoperations," "develop a Correction Action Plan," and "implement a Corrective Action Plan". This requirement and a VRF assignment of Medium is consistent, for example, with Reliability Standards FAC-008-3 – Facility Ratings, R7 ("…shall provide Facility Ratings (for its solely and jointly owned Facilities…"), MOD-012-0 – Dynamics Data for Modeling and Simulation of the Interconnected Transmission System, R2 ("…shall provide appropriate equipment characteristics and system data…"), IRO-015-1 – Special Protection System Data and Documentation, R1.1 ("…shall make notifications to other Reliability Coordinators of conditions in its Reliability Coordinator Area that may impact other Reliability Coordinator Areas."), and IRO-016-1 – Coordination of Real-time Activities Between Reliability Coordinators, R1 ("…shall contact the other Reliability Coordinator(s) to confirm that there is a problem and then discuss options and decide upon a solution to prevent or resolve the identified problem.") which all have a VRF of Medium. Other Protection Systems based Reliability Standards such as PRC-005-1b – Transmission and Generation Protection System Maintenance and Testing, R2 ("…shall provide documentation…"), PRC-016-0.1 – Special Protection System Misoperations, R3 ("…that owns an SPS shall provide documentation of the misoperation analyses…"), and PRC-017-0 – Special Protection System Maintenance and Testing, R2 ("…SPS shall provide documentation of the program…) all have a VRF of Lower; however, these requirements involve the administrative reporting to either the Regional Reliability Organization (now Regional Entity) or NERC and not a reliability function like the previously mentioned FAC-008-3 and MOD-012-0 Reliability Standards. As such, this Requirement R2 is assigned a VRF of Medium because it has a reliability need to be communicated to other owners.
FERC VRF G4 Discussion	Guideline 4- Consistency with NERC Definitions of VRFs:

VRF and VSL Justifications – PRC-004-3, R2			
	Failure to notify other entities to review each Protection System operation, identify Misoperations, and determine the cause could in the planning time frame, under emergency, abnormal, or restorative conditions anticipated by the preparations, directly and adversely affect the electrical state or capability of the bulk electric system, or the ability to effectively monitor, control, or restore the bulk electric system. Unresolved Misoperations of Composite Protection Systems owned by others that are not ruled out as a Misoperation could contribute to the severity of future disturbances affecting a wider area, or potential equipment damage.		
FERC VRF G5 Discussion	Guideline 5- Treatment of Requirements that Co-mingle More than One Obligation: This requirement does not co-mingle reliability objectives of differing risk; therefore, the assigned VRF of Medium is consistent.		
Proposed VSL			
Lower	**Moderate**	**High**	**Severe**
The responsible entity notified the other owner(s) of the Protection System component(s) in accordance with Requirement R2, but in more than 120 calendar days and less than or equal to 150 calendar days of the BES interrupting device operation.	The responsible entity notified the other owner(s) of the Protection System component(s) in accordance with Requirement R2, but in more than 150 calendar days and less than or equal to 165 calendar days of the BES interrupting device operation.	The responsible entity notified the other owner(s) of the Protection System component(s) in accordance with Requirement R2, but in more than 165 calendar days and less than or equal to 180 calendar days of the BES interrupting device operation.	The responsible entity notified the other owner(s) of the Protection System component(s) in accordance with Requirement R2, but in more than 180 calendar days of the BES interrupting device operation. OR

VRF and VSL Justifications – PRC-004-3, R2			
			The responsible entity failed to notify one or more of the other owner(s) of the Protection System component(s) in accordance with Requirement R2.
NERC VSL Guidelines	Meets NERC's VSL Guidelines—There is an incremental aspect to the VSL for tardiness and a binary aspect for failure. The VSL is entity size-neutral because performance is event-driven and not by individual assets.		
FERC VSL G1 Violation Severity Level Assignments Should Not Have the Unintended Consequence of Lowering the Current Level of Compliance	This requirement is new to the standard and had no previous level of compliance. Other Reliability Standards use a variety of VSLs ranging from a single severe level (i.e., binary), two levels, to four VSL levels. Some use a percentage as the failure of the number entities not notified; however, this would not be practical for this requirement as Composite Protection Systems that are owned by multiple entities is generally limited to one or two owners. The incremental increase in violation is consistent with the NERC Guidelines and is reasonable in consideration of the time periods provided by the Requirement.		
FERC VSL G2 Violation Severity Level Assignments Should Ensure Uniformity and Consistency in the Determination of Penalties	Guideline 2a: This requirement is not binary; therefore, this criterion does not apply. Guideline 2b:		

VRF and VSL Justifications – PRC-004-3, R2	
Guideline 2a: The Single Violation Severity Level Assignment Category for "Binary" Requirements Is Not Consistent Guideline 2b: Violation Severity Level Assignments that Contain Ambiguous Language	This VSL does not use any ambiguous terminology, thereby supporting uniformity and consistency in the determination of similar penalties for similar violations.
FERC VSL G3 Violation Severity Level Assignment Should Be Consistent with the Corresponding Requirement	This VSL uses similar terminology to that used in the associated requirement, and is therefore consistent with this Requirement.
FERC VSL G4 Violation Severity Level Assignment Should Be Based on A Single Violation, Not on A Cumulative Number of Violations	The VSL is based on a single violation and not cumulative violations.

VRF and VSL Justifications – PRC-004-3, R3	
Proposed VRF	**Medium**
NERC VRF Discussion	A Violation Risk Factor of Medium is consistent with the NERC VRF Guidelines. Failure of another Composite Protection System owner to review its component(s) for Misoperation, upon notification, for each BES interrupting device operation caused by a Protection System operation or by manual intervention in response to a Protection System failure to operate could in the planning time frame, under emergency, abnormal, or restorative conditions anticipated by the preparations, directly and adversely affect the electrical state or capability of the bulk electric system, or the ability to effectively monitor, control, or restore the bulk electric system. Composite Protection System operations reviewed for proper operation by the other owner(s) is an important step in preventing the future severity of disturbances affecting a wider area, or potential equipment damage.
FERC VRF G1 Discussion	Guideline 1- Consistency w/ Blackout Report: The blackout report and subsequent technical analysis noted that zone 3 relays increased the severity of the blackout. Reviewing Protection Systems for Misoperation, identifying an unnecessary operation and taking corrective actions would reduce the likelihood of reoccurrence. This requirement is consistent with Recommendation 8: Improve System Protection to Slow or Limit the Spread of Future Cascading Outages.
FERC VRF G2 Discussion	Guideline 2- Consistency within a Reliability Standard: This requirement has a single reliability activity associated with the reliability objective and no sub-Requirement(s) which allows a single VRF to be assigned; therefore no conflict(s) exist.

VRF and VSL Justifications – PRC-004-3, R3	
FERC VRF G3 Discussion	Guideline 3- Consistency among Reliability Standards: This requirement replaces one of the three performance components of PRC-004-2a, R1 (TO & DP) and R2 (GO). The three performance components (paraphrased) are "analyze Protection System Misoperations," "develop a Correction Action Plan," and "implement a Corrective Action Plan" which both have a VRF of High. This Requirement R3, to "review" (similar to "analyze"), comports with Reliability Standards PRC-016-0.1 – Special Protection System Misoperations, R1 ("…shall analyze its SPS operations and maintain a record of all misoperations…") and PRC-022-1 – Under-Voltage Load Shedding Program Performance, R1 ("…shall analyze and document all UVLS operations and Misoperations.") which both have a VRF of Medium. A VRF of Medium does not inadvertently lower the current VRF of High in the former PRC-004-2.1a, Requirements R1 and R2, because this Requirement now provides a clear and concise single reliability activity whereas the former Requirement contained multiple activities and is ambiguous.
FERC VRF G4 Discussion	Guideline 4- Consistency with NERC Definitions of VRFs: Failure of another Composite Protection System owner to review its component(s) for Misoperation, upon notification, for each BES interrupting device operation caused by a Protection System operation or by manual intervention in response to a Protection System failure to operate could in the planning time frame, under emergency, abnormal, or restorative conditions anticipated by the preparations, directly and adversely affect the electrical state or capability of the bulk electric system, or the ability to effectively monitor, control, or restore the bulk electric system. Composite Protection System operations reviewed for proper operation by the other owner(s) is an important step in preventing the future severity of disturbances affecting a wider area, or potential equipment damage.

VRF and VSL Justifications – PRC-004-3, R3			
FERC VRF G5 Discussion	Guideline 5- Treatment of Requirements that Co-mingle More than One Obligation: This requirement does not co-mingle reliability objectives of differing risk; therefore, the assigned VRF of Medium is consistent.		
Proposed VSL			
Lower	**Moderate**	**High**	**Severe**
The responsible entity identified whether or not its Protection System component(s) caused a Misoperation in accordance with Requirement R3, but was less than or equal to 30 calendar days late.	The responsible entity identified whether or not its Protection System component(s) caused a Misoperation in accordance with Requirement R3, but was greater than 30 calendar days and less than or equal to 45 calendar days late.	The responsible entity identified whether or not its Protection System component(s) caused a Misoperation in accordance with Requirement R3, but was greater than 45 calendar days and less than or equal to 60 calendar days late.	The responsible entity identified whether or not its Protection System component(s) caused a Misoperation in accordance with Requirement R3, but was greater than 60 calendar days late. OR The responsible entity failed to identify whether or not a Misoperation of its Protection System component(s) occurred in accordance with Requirement R3.
NERC VSL Guidelines	Meets NERC's VSL Guidelines—There is an incremental aspect to the VSL for tardiness and a binary aspect for failure. The VSL is entity size-neutral because performance is event-driven and not by individual assets.		

VRF and VSL Justifications – PRC-004-3, R3	
FERC VSL G1 Violation Severity Level Assignments Should Not Have the Unintended Consequence of Lowering the Current Level of Compliance	This requirement replaces one of the three performance components of PRC-004-2a, R1 (DP) and R2 (GO & TO) for the notified Protection System owner. The three performance components (paraphrased) are "analyze Protection System Misoperations," "develop a Correction Action Plan," and "implement a Corrective Action Plan." The VSLs are based on the three components and not individually as presented in the proposed PRC-004-3 standard. A VSL does not lower the current level of compliance because the former VSL was comingled with the other activities. This VSLs appropriately assess the severity of the violation with the failure to perform investigative actions as Severe.
FERC VSL G2 Violation Severity Level Assignments Should Ensure Uniformity and Consistency in the Determination of Penalties Guideline 2a: The Single Violation Severity Level Assignment Category for "Binary" Requirements Is Not Consistent Guideline 2b: Violation Severity Level Assignments that Contain Ambiguous Language	Guideline 2a: This requirement is not binary; therefore, this criterion does not apply. Guideline 2b: This VSL does not use any ambiguous terminology, thereby supporting uniformity and consistency in the determination of similar penalties for similar violations.

VRF and VSL Justifications – PRC-004-3, R3	
FERC VSL G3 Violation Severity Level Assignment Should Be Consistent with the Corresponding Requirement	This VSL uses similar terminology to that used in the associated requirement, and is therefore consistent with this Requirement.
FERC VSL G4 Violation Severity Level Assignment Should Be Based on A Single Violation, Not on A Cumulative Number of Violations	The VSL is based on a single violation and not cumulative violations.

VRF and VSL Justifications – PRC-004-3, R4	
Proposed VRF	**Medium**
NERC VRF Discussion	A Violation Risk Factor of Medium is consistent with the NERC VRF Guidelines. Failure to identify the cause(s) of a Misoperation (if not determined in Requirements R1 or R3) could in the planning time frame, under emergency, abnormal, or restorative conditions anticipated by the preparations, directly and adversely affect the electrical state or capability of the bulk electric system, or the ability to effectively monitor, control, or restore the bulk electric system.

VRF and VSL Justifications – PRC-004-3, R4	
	An Unidentified cause(s) of a Misoperation could contribute to the severity of future disturbances affecting a wider area, or potential equipment damage.
FERC VRF G1 Discussion	Guideline 1- Consistency w/ Blackout Report: This requirement is consistent with Recommendation 8: Improve System Protection to Slow or Limit the Spread of Future Cascading Outages. The applicable entity must conduct investigative action(s) to determine the cause(s) of a Misoperation, if not determined during the course of a review as proposed in Requirements R1 and R3.
FERC VRF G2 Discussion	Guideline 2- Consistency within a Reliability Standard: This requirement has a single reliability activity associated with the reliability objective and no sub-Requirement(s) which allows a single VRF to be assigned; therefore no conflict(s) exist.
FERC VRF G3 Discussion	Guideline 3- Consistency among Reliability Standards: This requirement replaces one of the three performance components of PRC-004-2a, R1 (TO & DP) and R2 (GO), which have a VRF of High. The three performance components (paraphrased) are "analyze Protection System Misoperations," "develop a Correction Action Plan," and "implement a Corrective Action Plan." This Requirement R4, to perform at least one "investigative action" (similar to "analyze"), comports with Reliability Standards PRC-016-0.1 – Special Protection System Misoperations, R1 ("…shall analyze its SPS operations and maintain a record of all misoperations…") and PRC-022-1 – Under-Voltage Load Shedding Program Performance, R1 ("…shall analyze and document all UVLS operations and Misoperations.") which both have a VRF of Medium.

VRF and VSL Justifications – PRC-004-3, R4	
	A VRF of Medium is not inadvertently lowering the current VRF of High in the former PRC-004-2.1a, Requirements R1 or R3, because this Requirement now provides a clear and concise single reliability activity whereas the former Requirement contained multiple activities and is ambiguous. This VRF of Medium comports with the VRF assignment of Medium for PRC-004-3, Requirements R1 and R3, which will generally reveal the cause(s) of an identified Misoperation.
FERC VRF G4 Discussion	Guideline 4- Consistency with NERC Definitions of VRFs: Failure to identify the cause(s) of a Misoperation could in the planning time frame, under emergency, abnormal, or restorative conditions anticipated by the preparations, directly and adversely affect the electrical state or capability of the bulk electric system, or the ability to effectively monitor, control, or restore the bulk electric system. Unidentified causes of a Misoperation could contribute to the severity of future disturbances affecting a wider area, or potential equipment damage.
FERC VRF G5 Discussion	Guideline 5- Treatment of Requirements that Co-mingle More than One Obligation: This requirement does not co-mingle reliability objectives of differing risk; therefore, the assigned VRF of Medium is consistent.

VRF and VSL Justifications – PRC-004-3, R4			
Proposed VSL			
Lower	**Moderate**	**High**	**Severe**
The responsible entity performed at least one investigative action in accordance with Requirement R4, but was less than or equal to one calendar quarter late.	The responsible entity performed at least one investigative action in accordance with Requirement R4, but was greater than one calendar quarter and less than or equal to two calendar quarters late.	The responsible entity performed at least one investigative action in accordance with Requirement R4, but was greater than two calendar quarters and less than or equal to three calendar quarters late.	The responsible entity performed at least one investigative action in accordance with Requirement R4, but was more than three calendar quarters late. OR The responsible entity failed to perform investigative action(s) in accordance with Requirement R4.
NERC VSL Guidelines	Meets NERC's VSL Guidelines—There is an incremental aspect to the VSL for tardiness and a binary aspect for failure. The VSL is entity size-neutral because performance is event-driven and not by individual assets.		
FERC VSL G1 Violation Severity Level Assignments Should Not Have the Unintended Consequence of Lowering the Current Level of Compliance	This requirement replaces one of the three performance components of PRC-004-2a, R1 (TO & DP) and R2 (GO). The three performance components (paraphrased) are "analyze Protection System Misoperations," "develop a Correction Action Plan," and "implement a Corrective Action Plan." The VSLs are based on the three components and not individually as presented in the proposed PRC-004-3 standard.		

VRF and VSL Justifications – PRC-004-3, R4	
	This VSL does not lower the current level of compliance because the former VSL was comingled with the other activities. This VSLs appropriately assess the severity of the violation with the failure to perform investigative actions as Severe.
FERC VSL G2 Violation Severity Level Assignments Should Ensure Uniformity and Consistency in the Determination of Penalties Guideline 2a: The Single Violation Severity Level Assignment Category for "Binary" Requirements Is Not Consistent Guideline 2b: Violation Severity Level Assignments that Contain Ambiguous Language	Guideline 2a: This requirement is not binary; therefore, this criterion does not apply. Guideline 2b: This VSL does not use any ambiguous terminology, thereby supporting uniformity and consistency in the determination of similar penalties for similar violations.
FERC VSL G3 Violation Severity Level Assignment Should Be Consistent with the Corresponding Requirement	This VSL uses similar terminology to that used in the associated requirement, and is therefore consistent with this Requirement.

VRF and VSL Justifications – PRC-004-3, R4	
FERC VSL G4 Violation Severity Level Assignment Should Be Based on A Single Violation, Not on A Cumulative Number of Violations	The VSL is based on a single violation and not cumulative violations.

VRF and VSL Justifications – PRC-004-3, R5	
Proposed VRF	**Medium**
NERC VRF Discussion	A Violation Risk Factor of Medium is consistent with the NERC VRF Guidelines. Failure to develop a CAP for a Misoperation with an identified cause could in the planning time frame, under emergency, abnormal, or restorative conditions anticipated by the preparations, directly and adversely affect the electrical state or capability of the bulk electric system, or the ability to effectively monitor, control, or restore the bulk electric system. An unresolved cause of a Misoperation or failing to consider other locations with similar Protection System components could affect the electrical state or capability of the bulk electric system, or the ability to effectively monitor, control, or restore the bulk electric system.

VRF and VSL Justifications – PRC-004-3, R5	
FERC VRF G1 Discussion	Guideline 1- Consistency w/ Blackout Report: The blackout report and subsequent technical analysis resulted in entities performing corrective actions; however, there were no negative reliability outcomes concerning the development of a Corrective Action Plan (CAP) associated with Protection Systems.
FERC VRF G2 Discussion	Guideline 2- Consistency within a Reliability Standard: This requirement has a single reliability activity associated with the reliability objective and no sub-Requirement(s) which allows a single VRF to be assigned; therefore no conflict(s) exist.
FERC VRF G3 Discussion	Guideline 3- Consistency among Reliability Standards: This requirement replaces one of the three performance components of PRC-004-2a, R1 (TO & DP) and R2 (GO). The three performance components (paraphrased) are "analyze Protection System Misoperations," "develop a Correction Action Plan," and "implement a Corrective Action Plan" which have a VRF of High. This requirement is consistent with Reliability Standards PRC-016-0.1, R2 ("…shall take corrective actions to avoid future Misoperations"), PRC-022-1, R1.5 ("For any Misoperation, a Corrective Action Plan…"), FAC-003, R5 ("…Transmission Owner or applicable Generator Owner shall take corrective action to ensure continued vegetation management") all three of which have a VRF of Medium.
FERC VRF G4 Discussion	Guideline 4- Consistency with NERC Definitions of VRFs: Failure to develop a CAP for a Misoperation with an identified cause or failing to consider other locations with similar components could in the planning time frame, under emergency, abnormal, or restorative conditions anticipated by the preparations, directly and adversely affect the electrical state or capability of the bulk electric system, or the ability to effectively monitor, control, or restore the bulk electric system.

VRF and VSL Justifications – PRC-004-3, R5			
	An unresolved cause of a Misoperation could affect the electrical state or capability of the bulk electric system, or the ability to effectively monitor, control, or restore the bulk electric system if the same condition resulted in a future Misoperation.		
FERC VRF G5 Discussion	Guideline 5- Treatment of Requirements that Co-mingle More than One Obligation: This requirement does not co-mingle reliability objectives of differing risk; therefore, the assigned VRF of Medium is consistent.		
Proposed VSL			
Lower	**Moderate**	**High**	**Severe**
The responsible entity developed a CAP, or explained in a declaration in accordance with Requirement R5, but in more than 60 calendar days and less than or equal to 70 calendar days of first identifying a cause of the Misoperation. OR	The responsible entity developed a CAP, or explained in a declaration in accordance with Requirement R5, but in more than 70 calendar days and less than or equal to 80 calendar days of first identifying a cause of the Misoperation. OR	The responsible entity developed a CAP, or explained in a declaration in accordance with Requirement R5, but in more than 80 calendar days and less than or equal to 90 calendar days of first identifying a cause of the Misoperation. OR	The responsible entity developed a CAP, or explained in a declaration in accordance with Requirement R5, but in more than 90 calendar days of first identifying a cause of the Misoperation. OR The responsible entity failed to develop a CAP or explain in a declaration in accordance with Requirement R5. OR

VRF and VSL Justifications – PRC-004-3, R5			
The responsible entity developed an evaluation in accordance with Requirement R5, but in more than 60 calendar days and less than or equal to 70 calendar days of first identifying a cause of the Misoperation.	The responsible entity developed an evaluation in accordance with Requirement R5, but in more than 70 calendar days and less than or equal to 80 calendar days of first identifying a cause of the Misoperation.	The responsible entity developed an evaluation in accordance with Requirement R5, but in more than 80 calendar days and less than or equal to 90 calendar days of first identifying a cause of the Misoperation.	The responsible entity developed an evaluation in accordance with Requirement R5, but in more than 90 calendar days of first identifying a cause of the Misoperation. OR The responsible entity failed to develop an evaluation in accordance with Requirement R5.
NERC VSL Guidelines	Meets NERC's VSL Guidelines—There is an incremental aspect to the VSL for tardiness and a binary aspect for failure. Varying VSLs are provided for the omission of the evaluation when developing the Corrective Action Plan and for failure to develop the evaluation.		
FERC VSL G1 Violation Severity Level Assignments Should Not Have the Unintended Consequence of Lowering the Current Level of Compliance	This requirement replaces one of the three performance components of PRC-004-2a, R1 (TO & DP) and R2 (GO). The three performance components (paraphrased) are "analyze Protection System Misoperations," "develop a Correction Action Plan," and "implement a Corrective Action Plan" which have varying VSLs. This VSL does not lower the current level of compliance because the former VSL in PRC-004-2.1a was comingled with the other activities. This Requirement has a Severe VSL for failure to develop the CAP with the other VSLs being based on tardiness of the development.		

VRF and VSL Justifications – PRC-004-3, R5	
FERC VSL G2 Violation Severity Level Assignments Should Ensure Uniformity and Consistency in the Determination of Penalties Guideline 2a: The Single Violation Severity Level Assignment Category for "Binary" Requirements Is Not Consistent Guideline 2b: Violation Severity Level Assignments that Contain Ambiguous Language	Guideline 2a: This requirement is not binary; therefore, this criterion does not apply. Guideline 2b: This VSL does not use any ambiguous terminology, thereby supporting uniformity and consistency in the determination of similar penalties for similar violations.
FERC VSL G3 Violation Severity Level Assignment Should Be Consistent with the Corresponding Requirement	This VSL uses similar terminology to that used in the associated requirement, and is therefore consistent with this Requirement.
FERC VSL G4	The VSL is based on a single violation and not cumulative violations.

VRF and VSL Justifications – PRC-004-3, R5	
Violation Severity Level Assignment Should Be Based on A Single Violation, Not on A Cumulative Number of Violations	

VRF and VSL Justification – PRC-004-3, R6	
Proposed VRF	**Medium**
NERC VRF Discussion	A Violation Risk Factor of Medium is consistent with the NERC VRF Guidelines. Failure to implement a CAP for a Misoperation with an identified cause could in the planning time frame, under emergency, abnormal, or restorative conditions anticipated by the preparations, directly and adversely affect the electrical state or capability of the bulk electric system, or the ability to effectively monitor, control, or restore the bulk electric system. An uncorrected cause of a Misoperation as a result of not implementing a Corrective Action Plan, could affect the electrical state or capability of the bulk electric system, or the ability to effectively monitor, control, or restore the bulk electric system since the condition could occur again.

VRF and VSL Justification – PRC-004-3, R6	
FERC VRF G1 Discussion	Guideline 1- Consistency w/ Blackout Report: The blackout report and subsequent technical analysis resulted in entities performing corrective actions; however, there were no negative reliability outcomes concerning the implementation of a Corrective Action Plan (CAP) associated with Protection Systems.
FERC VRF G2 Discussion	Guideline 2- Consistency within a Reliability Standard: This requirement has a single reliability activity associated with the reliability objective and no sub-Requirement(s) which allows a single VRF to be assigned; therefore no conflict(s) exist.
FERC VRF G3 Discussion	Guideline 3- Consistency among Reliability Standards: This requirement replaces one of the three performance components of PRC-004-2.1a, R1 (TO & DP) and R2 (GO),which both have a VRF of High. The three performance components (paraphrased) are "analyze Protection System Misoperations," "develop a Correction Action Plan," and "implement a Corrective Action Plan". This requirement is consistent with Reliability Standards PRC-016-0.1, R2 ("…shall take corrective actions to avoid future misoperations.") and PRC-022-1, R1.5 ("For any Misoperation, a Corrective Action Plan…") which both have a VRF of Medium. The proposed VRF of Medium does not inadvertently lower the current VRF of High in the former PRC-004-2.1a, Requirements R1 and R2, because this Requirement now provides a clear and concise single reliability activity whereas the former Requirement contained multiple activities and is ambiguous.

VRF and VSL Justification – PRC-004-3, R6	
FERC VRF G4 Discussion	Guideline 4- Consistency with NERC Definitions of VRFs: Failure to implement a Corrective Action Plan for a Misoperation with an identified cause could in the planning time frame, under emergency, abnormal, or restorative conditions anticipated by the preparations, directly and adversely affect the electrical state or capability of the bulk electric system, or the ability to effectively monitor, control, or restore the bulk electric system. An uncorrected cause of a Misoperation could contribute to the severity of future disturbances affecting a wider area, or potential equipment damage.
FERC VRF G5 Discussion	Guideline 5- Treatment of Requirements that Co-mingle More than One Obligation: This requirement does not co-mingle reliability objectives of differing risk; therefore, the assigned VRF of Medium is consistent.

Proposed VSL			
Lower	**Moderate**	**High**	**Severe**
The responsible entity implemented, but failed to update a CAP, when actions or timetables changed, in accordance with Requirement R6.	N/A	N/A	The responsible entity failed to implement a CAP in accordance with Requirement R6.

VRF and VSL Justification – PRC-004-3, R6	
NERC VSL Guidelines	Meets NERC's VSL Guidelines—The VSLs cover aspects of this Requirement that are not equal in importance and performance.
FERC VSL G1 Violation Severity Level Assignments Should Not Have the Unintended Consequence of Lowering the Current Level of Compliance	Guideline 3- Consistency among Reliability Standards: This requirement replaces one of the three performance components of PRC-004-2a, R1 (TO & DP) and R2 (GO). The three performance components (paraphrased) are "analyze Protection System Misoperations," "develop a Correction Action Plan," and "implement a Corrective Action Plan." The VSLs are based on the three components and not individually as presented in the proposed PRC-004-3 standard. The proposed VSL does not lower the current level of compliance because the former VSL was comingled with the other activities. The proposed Requirement is a Severe VSL for failure to implement the CAP with the Lower VSL being based on the failure of updating the CAP when actions or timetables change which is administrative in nature.
FERC VSL G2 Violation Severity Level Assignments Should Ensure Uniformity and Consistency in the Determination of Penalties	Guideline 2a: This requirement is not binary; therefore, this criterion does not apply. Guideline 2b: The proposed VSL does not use any ambiguous terminology, thereby supporting uniformity and consistency in the determination of similar penalties for similar violations.

VRF and VSL Justification – PRC-004-3, R6	
Guideline 2a: The Single Violation Severity Level Assignment Category for "Binary" Requirements Is Not Consistent Guideline 2b: Violation Severity Level Assignments that Contain Ambiguous Language	
FERC VSL G3 Violation Severity Level Assignment Should Be Consistent with the Corresponding Requirement	The proposed VSL uses similar terminology to that used in the associated requirement, and is therefore consistent with this Requirement.
FERC VSL G4 Violation Severity Level Assignment Should Be Based on A Single Violation, Not on A Cumulative Number of Violations	The VSL is based on a single violation and not cumulative violations.

NERC
NORTH AMERICAN ELECTRIC RELIABILITY CORPORATION

Project 2008-02 Undervoltage Load Shedding (PRC-010-1)

VRF and VSL Justifications

This document provides the Undervoltage Load Shedding Standard Drafting Team's (drafting team's) justification for assignment of violation risk factors (VRFs) and violation severity levels (VSLs) for each requirement in PRC-010-1 – Undervoltage Load Shedding.

Each primary requirement is assigned a VRF and a set of one or more VSLs. These elements support the determination of an initial value range for the Base Penalty Amount regarding violations of requirements in FERC-approved Reliability Standards, as defined in the ERO Sanction Guidelines.

The drafting team applied the following NERC criteria and FERC Guidelines when proposing VRFs and VSLs for the requirements under this project:

NERC Criteria - Violation Risk Factors

High Risk Requirement

A requirement that, if violated, could directly cause or contribute to Bulk Electric System instability, separation, or a Cascading sequence of failures, or could place the Bulk Electric System at an unacceptable risk of instability, separation, or Cascading failures; or, a requirement in a planning time frame that, if violated, could, under Emergency, abnormal, or restorative conditions anticipated by the preparations, directly cause or contribute to Bulk Electric System instability, separation, or a Cascading sequence of failures, place the Bulk Electric System at an unacceptable risk of instability, separation, or Cascading failures, or hinder restoration to a normal condition.

Medium Risk Requirement

A requirement that, if violated, could directly affect the electrical state or the capability of the Bulk Electric System or the ability to effectively monitor and control the Bulk Electric System. However, violation of a medium risk requirement is unlikely to lead to Bulk Electric System instability, separation, or Cascading failures; or, a requirement in a planning time frame that, if violated, could, under Emergency, abnormal, or restorative conditions anticipated by the preparations, directly and adversely affect the electrical state or capability of the Bulk Electric System or the ability to effectively monitor, control, or restore the Bulk Electric System. However, violation of a medium risk requirement is unlikely, under Emergency, abnormal, or restoration conditions anticipated by the preparations, to lead to Bulk Electric System instability, separation, or Cascading failures nor to hinder restoration to a normal condition.

Lower Risk Requirement

A requirement that is administrative in nature and a requirement that, if violated, would not be expected to adversely affect the electrical state or capability of the Bulk Electric System or the ability to effectively monitor and control the Bulk Electric System; or, a requirement that is administrative in nature and a requirement in a planning time frame that, if violated, would not, under the Emergency, abnormal, or

restorative conditions anticipated by the preparations, be expected to adversely affect the electrical state or capability of the Bulk Electric System or the ability to effectively monitor, control, or restore the Bulk Electric System. A planning requirement that is administrative in nature.

FERC Violation Risk Factor Guidelines

Guideline (1) — Consistency with the Conclusions of the Final Blackout Report

The Commission seeks to ensure that Violation Risk Factors assigned to requirements of reliability standards in these identified areas appropriately reflect their historical critical impact on the reliability of the Bulk Power System.

In the VSL Order, FERC listed critical areas (from the Final Blackout Report) where violations could severely affect the reliability of the Bulk-Power System:

- Emergency operations
- Vegetation management
- Operator personnel training
- Protection systems and their coordination
- Operating tools and backup facilities
- Reactive power and voltage control
- System modeling and data exchange
- Communication protocol and facilities
- Requirements to determine equipment ratings
- Synchronized data recorders
- Clearer criteria for operationally critical facilities
- Appropriate use of transmission loading relief

Guideline (2) — Consistency within a Reliability Standard

The Commission expects a rational connection between the sub-Requirement Violation Risk Factor assignments and the main Requirement Violation Risk Factor assignment.

Guideline (3) — Consistency among Reliability Standards

The Commission expects the assignment of Violation Risk Factors corresponding to Requirements that address similar reliability goals in different Reliability Standards would be treated comparably.

Guideline (4) — Consistency with NERC's Definition of the Violation Risk Factor Level

Guideline (4) was developed to evaluate whether the assignment of a particular Violation Risk Factor level conforms to NERC's definition of that risk level.

Guideline (5) — Treatment of Requirements that Co-mingle More Than One Obligation

Where a single Requirement co-mingles a higher risk reliability objective and a lesser risk reliability objective, the VRF assignment for such requirements must not be watered down to reflect the lower risk level associated with the less important objective of the reliability standard.

The following discussion addresses how the drafting team considered FERC's VRF Guidelines 2 through 5. The team did not address Guideline 1 directly because of an apparent conflict between Guidelines 1 and 4. Whereas Guideline 1 identifies a list of topics that encompass nearly all topics within NERC's Reliability Standards and implies that these requirements should be assigned a "High" VRF, Guideline 4 directs assignment of VRFs based on the impact of a specific requirement to the reliability of the system. The drafting team believes that Guideline 4 is reflective of the intent of VRFs in the first instance and, therefore, concentrated its approach on the reliability impact of the requirements.

PRC-010-1 – Undervoltage Load Shedding is a standard revision with the stated purpose: *To establish an integrated and coordinated approach to the design, evaluation, and reliable operation of Undervoltage Load Shedding Programs.* FERC Order No. 693 requested that PRC-010-0 be modified to require that an integrated and coordinated approach be included in all protection systems on the Bulk-Power System, including generators and transmission lines, generators' low voltage ride-through capabilities, and underfrequency loading shedding (UFLS) and undervoltage load shedding (UVLS) programs. PRC-010-1 addresses this directive in addition to consolidating and revising PRC-010-0 – Assessment of the Design and Effectiveness of UVLS Program with three (3) other existing UVLS standards: PRC-020-1 – Under-Voltage Load Shedding Program Database, PRC-021-1 – Under-Voltage Load Shedding Program Data, and PRC-022-1 – Under-Voltage Load Shedding Program Performance.

PRC-010-1 has eight (8) requirements that incorporate and enhance the intent of the requirements of PRC-010-0, PRC-020-1, PRC-021-1, and PRC-022-1. The revised standard requires that entities developing an Undervoltage Load Shedding Program (UVLS Program) evaluate the program's effectiveness prior to providing the program specifications and schedule to applicable entities. Applicable entities are then required to adhere to the UVLS Program specifications and implementation schedule, including those specifications and schedules associated with Corrective Action Plans (CAPs) for existing programs. The standard also requires an assessment of a UVLS Program at least once every 60 months, and an assessment to evaluate program performance within 12 months of an applicable event. If program deficiencies are identified as a result of either of these assessments, entities are required to develop and provide a CAP to applicable entities within three (3) months. In addition, there are requirements to update, provide data for, and share a UVLS Program database containing information necessary to model the program for use in event analyses and assessments.

The requirements of PRC-010-1 do not map, one-to-one, with the requirements of the legacy standards. The new requirements comingle various reliability attributes of the legacy standards with new reliability objectives, thus a requirement-to-requirement comparison of VRFs is not always possible. In developing the new VRFs for the requirements of PRC-010-1, the drafting team carefully considered the NERC criteria for developing VRFs, as well as the FERC VRF guidelines. The VRFs of FERC-approved PRC-006-1 – Automatic Underfrequency Load Shedding influenced the drafting team's VRF decisions (citing FERC VRF Guideline 3), as the drafting team used PRC-006-1 as a model with respect to PRC-010-1's language and construct.

NERC Criteria - Violation Severity Levels

VSLs define the degree to which compliance with a requirement was not achieved. Each requirement must have at least one VSL. While it is preferable to have four VSLs for each requirement, some requirements do not have multiple "degrees" of noncompliant performance, and may have only one, two, or three VSLs.

VSLs should be based on the guidelines shown in the table below:

Lower	Moderate	High	Severe
Missing a minor element (or a small percentage) of the required performance. The performance or product measured has significant value as it almost meets the full intent of the requirement.	Missing at least one significant element (or moderate percentage) of the required performance. The performance or product measured still has significant value in meeting the intent of the requirement.	Missing more than one significant element (or missing a high percentage) of the required performance or is missing a single vital component. The performance or product has limited value in meeting the intent of the requirement.	Missing most or all of the significant elements (or a significant percentage) of the required performance. The performance measured does not meet the intent of the requirement or the product delivered cannot be used in meeting the intent of the requirement.

FERC Order on Violation Severity Levels

In its June 19, 2008 Order on Violation Severity Levels, FERC indicated it would use the following four guidelines for determining whether to approve VSLs:

Guideline 1: Violation Severity Level Assignments Should Not Have the Unintended Consequence of Lowering the Current Level of Compliance

Compare the VSLs to any prior Levels of Non-compliance and avoid significant changes that may encourage a lower level of compliance than was required when Levels of Non-compliance were used.

Guideline 2: Violation Severity Level Assignments Should Ensure Uniformity and Consistency in the Determination of Penalties

Guideline 2a: A violation of a “binary” type requirement must be a “Severe” VSL.

Guideline 2b: Do not use ambiguous terms such as “minor” and “significant” to describe noncompliant performance.

Guideline 3: Violation Severity Level Assignment Should Be Consistent with the Corresponding Requirement

VSLs should not expand on what is required in the requirement.

Guideline 4: Violation Severity Level Assignment Should Be Based on a Single Violation, Not on a Cumulative Number of Violations

. . . unless otherwise stated in the requirement, each instance of non-compliance with a requirement is a separate violation. Section 4 of the Sanction Guidelines states that assessing penalties on a per violation per day basis is the “default” for penalty calculations.

VRF and VSL Justifications – PRC-010-1 Requirement R1	
Proposed VRF	High
NERC VRF Discussion	PRC-010-1 Requirement R1 meets the NERC criterion for a High VRF. Failure to evaluate a UVLS Program to show that it resolves the undervoltage issue it was designed for, and that it is coordinated with generator voltage ride-through capabilities and other protection and control systems, could lead to implementation of an ineffective or counterproductive program. In addition, failure to subsequently provide the UVLS Program specifications and implementation schedule to applicable entities would negate proper program implementation. Both these implications could, under anticipated Emergency, abnormal, or restorative conditions, directly contribute to Bulk Electric System (BES) instability, separation, or Cascading failures.
FERC VRF G1 Discussion	**Guideline 1: Consistency w/ Blackout Report** N/A
FERC VRF G2 Discussion	**Guideline 2: Consistency within a Reliability Standard** PRC-010-1 Requirement R1 has parts that all support the reliability objective so only one VRF was assigned; therefore no conflict(s) exist.
FERC VRF G3 Discussion	**Guideline 3: Consistency among Reliability Standards** PRC-010-1 Requirement R1 is similar to EOP-003-2, Requirements R3, R4, and R7, which have approved VRFs of High.
FERC VRF G4 Discussion	**Guideline 4: Consistency with NERC Definitions of VRFs** PRC-010-1 Requirement R1 meets the NERC criterion for a High VRF. Failure to evaluate a UVLS Program to show that it resolves the undervoltage issue it was designed for, and that it is coordinated with generator voltage ride-through capabilities and other protection and control systems, could lead to implementation of an ineffective or counterproductive program. In addition, failure to subsequently provide the UVLS Program specifications and implementation schedule to applicable entities would negate proper program implementation. Both these implications could, under anticipated Emergency, abnormal, or restorative conditions, directly contribute to BES instability, separation, or Cascading failures.
FERC VRF G5 Discussion	**Guideline 5: Treatment of Requirements that Co-mingle More than One Obligation** The obligations in PRC-010-1 Requirement R1, which are to evaluate the effectiveness of a UVLS Program according to the criteria specified in the two parts and subsequently provide the program specifications and implementation schedule to applicable entities, are all equally critical elements that failure to meet could, under anticipated Emergency, abnormal, or restorative conditions, directly contribute to BES instability, separation, or

VRF and VSL Justifications – PRC-010-1 Requirement R1	
	Cascading failures. Therefore, the assigned VRF of High is consistent throughout the requirement.
Proposed Lower VSL	N/A
Proposed Moderate VSL	N/A
Proposed High VSL	N/A
Proposed Severe VSL	The applicable entity that developed the UVLS Program failed to evaluate the program's effectiveness and subsequently provide the UVLS Program's specifications and implementation schedule to UVLS entities in accordance with Requirement R1, including the items specified in parts 1.1 and 1.2.
NERC VSL Guidelines Discussion	The proposed VSL for PRC-010-1 Requirement R1 meets NERC's VSL Guidelines in that there is a binary aspect for failure; the VSL addresses the degrees of compliance with respect to equal importance of the two parts.
FERC VSL G1 Discussion	**Guideline 1: Violation Severity Level Assignments Should Not Have the Unintended Consequence of Lowering the Current Level of Compliance** The basis for the current level of compliance in relation to PRC-010-1 Requirement R1 is EOP-003-2 Requirements R3, R4, and R7, as these requirements are being retired because they map to PRC-010-1 Requirement R1. Since the VSL for PRC-010-1 Requirement R1 is binary, the current level of compliance is met or exceeded when compared to the VSLs for EOP-003-2 Requirements R3, R4, and R7.
FERC VSL G2 Discussion	**Guideline 2: Violation Severity Level Assignments Should Ensure Uniformity and Consistency in the Determination of Penalties** **Guideline 2a: The Single Violation Severity Level Assignment Category for "Binary" Requirements Is Not Consistent** The proposed VSL for PRC-010-1 Requirement R1 is binary and is consistent with the guideline in that it is classified as a severe VSL. **Guideline 2b: Violation Severity Level Assignments that Contain Ambiguous Language** The proposed VSL for PRC-010-1 Requirement R1 uses the term "effectiveness" from the associated requirement, which could be considered ambiguous terminology; however, Requirement R1 does qualify the term "effectiveness" by indicating that the applicable entity must include what is listed in the requirement's parts in its evaluation of effectiveness. The VSL subsequently notes that the items specified in the parts must be included. This thereby supports uniformity and consistency in the determination of similar penalties for similar violations.

VRF and VSL Justifications – PRC-010-1 Requirement R1	
FERC VSL G3	**Guideline 3: Violation Severity Level Assignment Should Be Consistent with the Corresponding Requirement** The proposed VSL for PRC-010-1 Requirement R1 uses similar terminology to that used in the requirement and is therefore consistent with the requirement.
FERC VSL G4	**Guideline 4: Violation Severity Level Assignment Should Be Based on A Single Violation, Not on A Cumulative Number of Violations** The proposed VSL for PRC-010-1 Requirement R1 is based on a single violation and not cumulative violations.

VRF and VSL Justifications – PRC-010-1 Requirement R2	
Proposed VRF	High
NERC VRF Discussion	PRC-010-1 Requirement R2 meets the NERC criterion for a High VRF. Failure to implement a UVLS Program by adhering to the program specifications and implementation schedule increases the risk that the program will not perform properly. Under anticipated Emergency, abnormal, or restorative conditions, this could directly contribute to BES instability, separation, or Cascading failures.
FERC VRF G1 Discussion	**Guideline 1: Consistency w/ Blackout Report** N/A
FERC VRF G2 Discussion	**Guideline 2: Consistency within a Reliability Standard** PRC-010-1 Requirement R2 has no parts so only one VRF was assigned.
FERC VRF G3 Discussion	**Guideline 3: Consistency among Reliability Standards** PRC-010-1 Requirement R2 is similar to PRC-006-1 Requirement R9 and EOP-003-2 Requirement R5, which have approved VRFs of High.
FERC VRF G4 Discussion	**Guideline 4: Consistency with NERC Definitions of VRFs** PRC-010-1 Requirement R2 meets the NERC criterion for a High VRF. Failure to implement a UVLS Program by adhering to the program specifications and implementation schedule increases the risk that the program will not perform properly. Under anticipated Emergency, abnormal, or restorative conditions, this could directly contribute to BES instability, separation, or Cascading failures.
FERC VRF G5 Discussion	**Guideline 5: Treatment of Requirements that Co-mingle More than One Obligation** The obligations required in PRC-010-1 Requirement R2 are to adhere to the UVLS Program specifications and implementation schedule associated with program development (per Requirement R1) and corrective action (per Requirement R5). The requirement to develop a CAP in Requirement R5 is assigned a Medium VRF; therefore, execution of the corrective actions required by Requirement R2 has a commensurate VRF of Medium. However, since the obligations related to the development of a UVLS Program in Requirement R1 are assigned a High VRF, the failure to implement the program per Requirement R2 could, under anticipated Emergency, abnormal, or restorative conditions, directly contribute to BES instability, separation, or Cascading failures. Therefore, Requirement R2 is assigned a High VRF to reflect the higher risk level associated with the more critical objective.
Proposed Lower VSL	N/A

VRF and VSL Justifications – PRC-010-1 Requirement R2	
Proposed Moderate VSL	N/A
Proposed High VSL	The applicable entity failed to adhere to the UVLS Program specifications in accordance with Requirement R2. OR The applicable entity failed to adhere to the implementation schedule in accordance with Requirement R2.
Proposed Severe VSL	The applicable entity failed to adhere to the UVLS Program specifications and implementation schedule in accordance with Requirement R2.
NERC VSL Guidelines Discussion	PRC-010-1 Requirement R2 meets NERC's VSL Guidelines in that the VSLs cover aspects of the requirement that are equal in importance.
FERC VSL G1 Discussion	**Guideline 1: Violation Severity Level Assignments Should Not Have the Unintended Consequence of Lowering the Current Level of Compliance** PRC-010-1 Requirement R2 is a new requirement; therefore, there is no prior level of compliance.
FERC VSL G2 Discussion	**Guideline 2: Violation Severity Level Assignments Should Ensure Uniformity and Consistency in the Determination of Penalties** **Guideline 2a: The Single Violation Severity Level Assignment Category for "Binary" Requirements Is Not Consistent** N/A **Guideline 2b: Violation Severity Level Assignments that Contain Ambiguous Language** The proposed VSLs for PRC-010-1 Requirement R2 do not use any ambiguous terminology, thereby supporting uniformity and consistency in the determination of similar penalties for similar violations.
FERC VSL G3	**Guideline 3: Violation Severity Level Assignment Should Be Consistent with the Corresponding Requirement** The proposed VSLs for PRC-010-1 Requirement R2 use similar terminology to that used in the requirement and are therefore consistent with the requirement.
FERC VSL G4	**Guideline 4: Violation Severity Level Assignment Should Be Based on A Single Violation, Not on A Cumulative Number of Violations** The proposed VSLs for PRC-010-1 Requirement R2 are based on a single violation and not cumulative violations.

VRF and VSL Justifications – PRC-010-1 Requirement R3	
Proposed VRF	Medium
NERC VRF Discussion	PRC-010-1 Requirement R3 meets NERC's criterion for a Medium VRF. Failure to perform a comprehensive assessment to evaluate the effectiveness of a UVLS Program at least once every 60 calendar months could lead to failure to identify and address a necessary program modification, which could, under anticipated Emergency, abnormal, or restorative conditions, directly and adversely affect the electrical state or the capability of the BES, or the ability to effectively monitor and control the BES. However, while the performance that must be met when initially developing a UVLS Program is assigned a High VRF in Requirement R1 due to the likely implications of developing and subsequently implementing an ineffective or counterproductive program if the criteria is not met, it is less likely that failure to do a periodic comprehensive assessment of the program, which supplements the annual Transmission Planning (TPL) assessment required by NERC Reliability Standards, would have implications on the BES. Therefore, a violation of Requirement R3 is unlikely to lead to BES instability, separation, or Cascading failures. The applicable entities are always responsible for maintaining the reliability of the BES regardless of the situation.
FERC VRF G1 Discussion	**Guideline 1: Consistency w/ Blackout Report** N/A
FERC VRF G2 Discussion	**Guideline 2: Consistency within a Reliability Standard** PRC-010-1 Requirement R3 has parts that all support the reliability objective so only one VRF was assigned; therefore no conflict(s) exist.
FERC VRF G3 Discussion	**Guideline 3: Consistency among Reliability Standards** PRC-010-1 Requirement R3 is consistent with the current requirement it is replacing (PRC-010-0 Requirement R1), which has an approved VRF of Medium. Similar performance exists in PRC-006-1 Requirement R4, which has an approved VRF of High. This discrepancy is justified due to the differing nature of the programs these standards are addressing, as PRC-006-1 addresses mandatory UFLS programs and PRC-010-1 covers optional UVLS Programs. A UFLS program inherently has a more likely overall impact on the BES.
FERC VRF G4 Discussion	**Guideline 4: Consistency with NERC Definitions of VRFs** PRC-010-1 Requirement R3 meets NERC's criterion for a Medium VRF. Failure to perform a comprehensive assessment to evaluate the effectiveness of a UVLS Program at least once every 60 calendar months could lead to failure to identify and address a necessary program modification, which could, under anticipated Emergency, abnormal, or restorative conditions, directly and

VRF and VSL Justifications – PRC-010-1 Requirement R3	
	adversely affect the electrical state or the capability of the BES, or the ability to effectively monitor and control the BES. However, while the performance that must be met when initially developing a UVLS Program is assigned a High VRF in Requirement R1 due to the likely implications of developing and subsequently implementing an ineffective or counterproductive program if the criteria is not met, it is less likely that failure to do a periodic comprehensive assessment of the program, which supplements the annual TPL assessment required by NERC Reliability Standards, would have implications on the BES. Therefore, a violation of Requirement R3 is unlikely to lead to BES instability, separation, or Cascading failures. The applicable entities are always responsible for maintaining the reliability of the BES regardless of the situation.
FERC VRF G5 Discussion	**Guideline 5: Treatment of Requirements that Co-mingle More than One Obligation** The obligation required in PRC-010-1 Requirement R3 is to periodically evaluate the effectiveness of a UVLS Program according to the criteria specified in the two parts; the parts are equally critical elements that failure to meet could, under anticipated Emergency, abnormal, or restorative conditions, directly contribute to BES instability, separation, or Cascading failures. However, violation of these commensurate elements is unlikely to lead to BES instability, separation, or Cascading failures. Therefore, the assigned VRF of Medium is consistent throughout the requirement.
Proposed Lower VSL	N/A
Proposed Moderate VSL	N/A
Proposed High VSL	N/A
Proposed Severe VSL	The applicable entity failed to perform an assessment at least once during the 60 calendar months in accordance with Requirement R3, including the items specified in parts 3.1 and 3.2.
NERC VSL Guidelines Discussion	PRC-010-1 Requirement R3 meets NERC's VSL Guidelines in that there is a binary aspect for failure; the VSL addresses the degrees of compliance with respect to equal importance of the two parts.
FERC VSL G1 Discussion	**Guideline 1: Violation Severity Level Assignments Should Not Have the Unintended Consequence of Lowering the Current Level of Compliance** The proposed VSL for PRC-010-1 Requirement R3 is consistent in nature with the VSL for the requirement it is replacing (PRC-010-0 Requirement R1) and therefore does not lower the current level of compliance.

VRF and VSL Justifications – PRC-010-1 Requirement R3	
FERC VSL G2 Discussion	**Guideline 2: Violation Severity Level Assignments Should Ensure Uniformity and Consistency in the Determination of Penalties** **Guideline 2a: The Single Violation Severity Level Assignment Category for "Binary" Requirements Is Not Consistent** The proposed VSL for PRC-010-1 Requirement R3 for this binary requirement is consistent with the guideline in that it is classified as a severe VSL. **Guideline 2b: Violation Severity Level Assignments that Contain Ambiguous Language** The proposed VSL for PRC-010-1 Requirement R3 does not use any ambiguous terminology, thereby supporting uniformity and consistency in the determination of similar penalties for similar violations.
FERC VSL G3	**Guideline 3: Violation Severity Level Assignment Should Be Consistent with the Corresponding Requirement** The proposed VSL for PRC-010-1 Requirement R3 uses similar terminology to that used in the requirement and is therefore consistent with the requirement.
FERC VSL G4	**Guideline 4: Violation Severity Level Assignment Should Be Based on A Single Violation, Not on A Cumulative Number of Violations** The proposed VSL for PRC-010-1 Requirement R3 is based on a single violation and not cumulative violations.

VRF and VSL Justifications – PRC-010-1 Requirement R4	
Proposed VRF	Medium
NERC VRF Discussion	PRC-010-1 Requirement R4 meets NERC's criterion for a Medium VRF. Failure to perform an assessment to evaluate whether the UVLS Program resolved the undervoltage issues associated with a qualifying event in a timely manner could lead to failure to identify and address a necessary program modification. This could, under anticipated Emergency, abnormal, or restorative conditions, directly affect the electrical state or the capability of the BES, or the ability to effectively monitor and control the BES. However, while the performance that must be met when initially developing a UVLS Program is assigned a High VRF in Requirement R1 due to the likely implications of developing and subsequently implementing an ineffective or counterproductive program if the criteria is not met, it is less likely that failure to perform an assessment to evaluate whether the UVLS Program resolved the undervoltage issues associated with a qualifying event would have implications on the BES, as these are infrequent and would be done in addition to the annual TPL assessment required by NERC Reliability Standards. Therefore, a violation of Requirement R4 is unlikely to lead to BES instability, separation, or Cascading failures. The applicable entities are always responsible for maintaining the reliability of the BES regardless of the situation.
FERC VRF G1 Discussion	**Guideline 1: Consistency w/ Blackout Report** N/A
FERC VRF G2 Discussion	**Guideline 2: Consistency within a Reliability Standard** PRC-010-1 Requirement R4 has no parts so only one VRF was assigned.
FERC VRF G3 Discussion	**Guideline 3: Consistency among Reliability Standards** PRC-010-1 Requirement R4 is similar to PRC-022-1 Requirement 1 and PRC-006-1 Requirement R11, which have approved VRFs of Medium.
FERC VRF G4 Discussion	**Guideline 4: Consistency with NERC Definitions of VRFs** PRC-010-1 Requirement R4 meets NERC's criterion for a Medium VRF. Failure to perform an assessment to evaluate whether the UVLS Program resolved the undervoltage issues associated with a qualifying event in a timely manner could lead to failure to identify and address a necessary program modification. This could, under anticipated Emergency, abnormal, or restorative conditions, directly affect the electrical state or the capability of the BES, or the ability to effectively monitor and control the BES. However, while the performance that must be met when initially developing a UVLS Program is assigned a High VRF in Requirement R1 due to the likely implications of developing and subsequently implementing an ineffective or

VRF and VSL Justifications – PRC-010-1 Requirement R4	
	counterproductive program if the criteria is not met, it is less likely that failure to perform an assessment to evaluate whether the UVLS Program resolved the undervoltage issues associated with a qualifying event would have implications on the BES, as these are infrequent and would be done in addition to the annual TPL assessment required by NERC Reliability Standards. Therefore, a violation of Requirement R4 is unlikely to lead to BES instability, separation, or Cascading failures. The applicable entities are always responsible for maintaining the reliability of the BES regardless of the situation.
FERC VRF G5 Discussion	**Guideline 5: Treatment of Requirements that Co-mingle More than One Obligation** PRC-010-1 Requirement R4 does not co-mingle reliability objectives of differing risk; the assigned VRF of Medium is consistent throughout the requirement.
Proposed Lower VSL	The applicable entity performed an assessment in accordance with Requirement R4 within a time period greater than 12 calendar months but less than or equal to 13 calendar months after an applicable event.
Proposed Moderate VSL	The applicable entity performed an assessment in accordance with Requirement R4 within a time period greater than 13 calendar months but less than or equal to 14 calendar months after an applicable event.
Proposed High VSL	The applicable entity performed an assessment in accordance with Requirement R4 within a time period greater than 14 calendar months but less than or equal to 15 calendar months after an applicable event.
Proposed Severe VSL	The applicable entity performed an assessment in accordance with Requirement R4 within a time period greater than 15 months after an applicable event. OR The applicable entity failed to perform an assessment in accordance with Requirement R4.
NERC VSL Guidelines Discussion	PRC-010-1 Requirement R4 meets NERC's VSL Guidelines in that there is an incremental aspect to the VSLs for tardiness and a binary aspect for failure.
FERC VSL G1 Discussion	**Guideline 1: Violation Severity Level Assignments Should Not Have the Unintended Consequence of Lowering the Current Level of Compliance** PRC-010-1 Requirement R4 is different in construct from the requirement it is replacing (PRC-022-1 Requirement R1) and, therefore, the VSLs cannot be compared. However, both sets of VSLs have incremental aspects and a binary aspect for failure.

VRF and VSL Justifications – PRC-010-1 Requirement R4	
FERC VSL G2 Discussion	**Guideline 2: Violation Severity Level Assignments Should Ensure Uniformity and Consistency in the Determination of Penalties** **Guideline 2a: The Single Violation Severity Level Assignment Category for "Binary" Requirements Is Not Consistent** N/A **Guideline 2b: Violation Severity Level Assignments that Contain Ambiguous Language** The proposed VSLs for PRC-010-1 Requirement R4 do not use any ambiguous terminology, thereby supporting uniformity and consistency in the determination of similar penalties for similar violations.
FERC VSL G3	**Guideline 3: Violation Severity Level Assignment Should Be Consistent with the Corresponding Requirement** The proposed VSLs for PRC-010-1 Requirement R4 use similar terminology to that used in the requirement and are therefore consistent with the requirement.
FERC VSL G4	**Guideline 4: Violation Severity Level Assignment Should Be Based on A Single Violation, Not on A Cumulative Number of Violations** The proposed VSLs for PRC-010-1 Requirement R4 are based on a single violation and not cumulative violations.

VRF and VSL Justifications – PRC-010-1 Requirement R5	
Proposed VRF	Medium
NERC VRF Discussion	PRC-010-1 Requirement R5 meets NERC's criterion for a Medium VRF. Failure to develop and subsequently provide a CAP to address the deficiencies identified as a result of a UVLS Program assessment in a timely manner could lead to failure to address a necessary program modification, which could, under anticipated Emergency, abnormal, or restorative conditions, directly affect the electrical state or the capability of the BES, or the ability to effectively monitor and control the BES. However, since the development of a CAP in Requirement R5 is dependent on the outcomes of Requirement R3 or R4, the likelihood of implications on the BES is commensurate with those of Requirements R3 and R4, which are assigned Medium VRFs. Therefore, a violation of Requirement R5 is unlikely to lead to BES instability, separation, or Cascading failures. The applicable entities are always responsible for maintaining the reliability of the BES regardless of the situation.
FERC VRF G1 Discussion	**Guideline 1: Consistency w/ Blackout Report** N/A
FERC VRF G2 Discussion	**Guideline 2: Consistency within a Reliability Standard** PRC-010-1 Requirement R5 has no parts so only one VRF was assigned.
FERC VRF G3 Discussion	**Guideline 3: Consistency among Reliability Standards** PRC-010-1 Requirement R5 is similar to PRC-022-1 Requirement R1.5, which has an approved VRF of Medium.
FERC VRF G4 Discussion	**Guideline 4: Consistency with NERC Definitions of VRFs** PRC-010-1 Requirement R5 meets NERC's criterion for a Medium VRF. Failure to develop and subsequently provide a CAP to address the deficiencies identified as a result of a UVLS Program assessment in a timely manner could lead to failure to address a necessary program modification, which could, under anticipated Emergency, abnormal, or restorative conditions, directly affect the electrical state or the capability of the BES, or the ability to effectively monitor and control the BES. However, since the development of a CAP in Requirement R5 is dependent on the outcomes of Requirement R3 or R4, the likelihood of implications on the BES is commensurate with those of Requirements R3 and R4, which are assigned Medium VRFs. Therefore, a violation of Requirement R5 is unlikely to lead to BES instability, separation, or Cascading failures. The applicable entities are always responsible for maintaining the reliability of the BES regardless of the situation.

VRF and VSL Justifications – PRC-010-1 Requirement R5	
FERC VRF G5 Discussion	**Guideline 5: Treatment of Requirements that Co-mingle More than One Obligation** PRC-010-1 Requirement R5 does not co-mingle reliability objectives of differing risk; the assigned VRF of Medium is consistent throughout the requirement.
Proposed Lower VSL	The applicable entity developed a Corrective Action Plan and provided it to UVLS entities in accordance with Requirement R5 but was late by less than or equal to 15 calendar days.
Proposed Moderate VSL	The applicable entity developed a Corrective Action Plan and provided it to UVLS entities in accordance with Requirement R5 but was late by more than 15 calendar days but less than or equal to 30 calendar days.
Proposed High VSL	The applicable entity developed a Corrective Action Plan and provided it to UVLS entities in accordance with Requirement R5 but was late by more than 30 calendar days but less than or equal to 45 calendar days.
Proposed Severe VSL	The applicable entity developed a Corrective Action Plan and provided it to UVLS entities in accordance with Requirement R5 but was late by more than 45 calendar days. OR The responsible entity failed to develop a Corrective Action Plan or provide it to UVLS entities in accordance with Requirement R5.
NERC VSL Guidelines Discussion	PRC-010-1 Requirement R5 meets NERC's VSL Guidelines in that there is an incremental aspect to the VSLs for tardiness and a binary aspect for failure.
FERC VSL G1 Discussion	**Guideline 1: Violation Severity Level Assignments Should Not Have the Unintended Consequence of Lowering the Current Level of Compliance** PRC-010-1 Requirement R5 is different in construct from the requirement it is replacing (PRC-022-1 Requirement R1) and, therefore, the VSLs cannot be compared. However, both sets of VSLs have incremental aspects and a binary aspect for failure.
FERC VSL G2 Discussion	**Guideline 2: Violation Severity Level Assignments Should Ensure Uniformity and Consistency in the Determination of Penalties** **Guideline 2a: The Single Violation Severity Level Assignment Category for "Binary" Requirements Is Not Consistent** N/A **Guideline 2b: Violation Severity Level Assignments that Contain Ambiguous Language** The proposed VSLs for PRC-010-1 Requirement R5 do not use any ambiguous terminology, thereby supporting uniformity and consistency in the determination of similar penalties for similar violations.

VRF and VSL Justifications – PRC-010-1 Requirement R5	
FERC VSL G3	**Guideline 3: Violation Severity Level Assignment Should Be Consistent with the Corresponding Requirement** The proposed VSLs for PRC-010-1 Requirement R5 use similar terminology to that used in the requirement and are therefore consistent with the requirement.
FERC VSL G4	**Guideline 4: Violation Severity Level Assignment Should Be Based on A Single Violation, Not on A Cumulative Number of Violations** The proposed VSLs for PRC-010-1 Requirement R5 are based on a single violation and not cumulative violations.

VRF and VSL Justifications – PRC-010-1 Requirement R6	
Proposed VRF	Lower
NERC VRF Discussion	PRC-010-1 Requirement R6 meets NERC's criterion for a Lower VRF. Though having a current UVLS Program database is necessary to properly inform accurate undervoltage studies and event analyses, this is a planning requirement that is administrative in nature; failure to annually update a UVLS Program database would not, under the anticipated Emergency, abnormal, or restorative conditions, be expected to adversely affect the electrical state or capability of the BES, or the ability to effectively monitor, control, or restore the BES. The applicable entities are always responsible for maintaining the reliability of the BES regardless of the situation.
FERC VRF G1 Discussion	**Guideline 1: Consistency w/ Blackout Report** N/A
FERC VRF G2 Discussion	**Guideline 2: Consistency within a Reliability Standard** The requirement has no parts so only one VRF was assigned.
FERC VRF G3 Discussion	**Guideline 3: Consistency among Reliability Standards** PRC-010-1 Requirement R6 similar to PRC-006-1 Requirement R6, which has an approved VRF of Lower.
FERC VRF G4 Discussion	**Guideline 4: Consistency with NERC Definitions of VRFs** PRC-010-1 Requirement R6 meets NERC's criterion for a Lower VRF. Though having a current UVLS Program database is necessary to properly inform accurate undervoltage studies and event analyses, this is a planning requirement that is administrative in nature; failure to annually update a UVLS Program database would not, under the anticipated Emergency, abnormal, or restorative conditions, be expected to adversely affect the electrical state or capability of the BES, or the ability to effectively monitor, control, or restore the BES. The applicable entities are always responsible for maintaining the reliability of the BES regardless of the situation.
FERC VRF G5 Discussion	**Guideline 5: Treatment of Requirements that Co-mingle More than One Obligation** PRC-010-1 Requirement R6 does not co-mingle reliability objectives of differing risk; the assigned VRF of Lower is consistent throughout the requirement.
Proposed Lower VSL	The applicable entity updated the database in accordance with Requirement R6 but was late by less than or equal to 30 calendar days.
Proposed Moderate VSL	The applicable entity updated the database in accordance with Requirement R6 but was late by less than or equal to 30 calendar days.
Proposed High VSL	The applicable entity updated the database in accordance with Requirement R6 but was late by more than 60 calendar days but less than or equal to 90

VRF and VSL Justifications – PRC-010-1 Requirement R6	
	calendar days.
Proposed Severe VSL	The applicable entity updated the database in accordance with Requirement R6 but was late by more than 90 calendar days. OR The applicable entity failed to update the database in accordance with Requirement R6.
NERC VSL Guidelines Discussion	PRC-010-1 Requirement R6 meets NERC's VSL Guidelines in that there is an incremental aspect to the VSLs for tardiness and a binary aspect for failure.
FERC VSL G1 Discussion	**Guideline 1: Violation Severity Level Assignments Should Not Have the Unintended Consequence of Lowering the Current Level of Compliance** PRC-010-1 Requirement R6 is replacing PRC-020-1 Requirement R1, which is applicable to the Regional Reliability Organization and has no associated VSLs. Therefore, there is no prior level of compliance.
FERC VSL G2 Discussion	**Guideline 2: Violation Severity Level Assignments Should Ensure Uniformity and Consistency in the Determination of Penalties** **Guideline 2a: The Single Violation Severity Level Assignment Category for "Binary" Requirements Is Not Consistent** N/A **Guideline 2b: Violation Severity Level Assignments that Contain Ambiguous Language** The proposed VSLs for PRC-010-1 Requirement R6 do not use any ambiguous terminology, thereby supporting uniformity and consistency in the determination of similar penalties for similar violations.
FERC VSL G3	**Guideline 3: Violation Severity Level Assignment Should Be Consistent with the Corresponding Requirement** The proposed VSLs for PRC-010-1 Requirement R6 use similar terminology to that used in the requirement and are therefore consistent with the requirement.
FERC VSL G4	**Guideline 4: Violation Severity Level Assignment Should Be Based on A Single Violation, Not on A Cumulative Number of Violations** The proposed VSLs for PRC-010-1 Requirement R6 are based on a single violation and not cumulative violations.

VRF and VSL Justifications – PRC-010-1 Requirement R7	
Proposed VRF	Lower
NERC VRF Discussion	PRC-010-1 Requirement R7 meets NERC's criterion for a Lower VRF. Though providing current and formatted data is necessary to properly support a UVLS Program database, which subsequently informs accurate undervoltage studies and event analyses, this is a planning requirement that is administrative in nature; failure to provide the data according to the format and schedule specified would not, under the anticipated Emergency, abnormal, or restorative conditions, be expected to adversely affect the electrical state or capability of the BES, or the ability to effectively monitor, control, or restore the BES. The applicable entities are always responsible for maintaining the reliability of the BES regardless of the situation.
FERC VRF G1 Discussion	**Guideline 1: Consistency w/ Blackout Report** N/A
FERC VRF G2 Discussion	**Guideline 2: Consistency within a Reliability Standard** PRC-010-1 Requirement R7 has no parts so only one VRF was assigned.
FERC VRF G3 Discussion	**Guideline 3 Consistency among Reliability Standards:** PRC-010-1 Requirement R7 is similar to PRC-006-1 Requirement R8, which has an approved VRF of Lower.
FERC VRF G4 Discussion	**Guideline 4: Consistency with NERC Definitions of VRFs** PRC-010-1 Requirement R7 meets NERC's criterion for a Lower VRF. Though providing current and formatted data is necessary to properly support a UVLS Program database, which subsequently informs accurate undervoltage studies and event analyses, this is a planning requirement that is administrative in nature; failure to provide the data according to the format and schedule specified would not, under the anticipated Emergency, abnormal, or restorative conditions, be expected to adversely affect the electrical state or capability of the BES, or the ability to effectively monitor, control, or restore the BES. The applicable entities are always responsible for maintaining the reliability of the BES regardless of the situation.
FERC VRF G5 Discussion	**Guideline 5: Treatment of Requirements that Co-mingle More than One Obligation** PRC-010-1 Requirement R7 does not co-mingle reliability objectives of differing risk; the assigned VRF of Lower is consistent throughout the requirement.
Proposed Lower VSL	The applicable entity provided data in accordance with Requirement R7 but was late by less than or equal to 30 calendar days per the specified schedule. OR

VRF and VSL Justifications – PRC-010-1 Requirement R7	
	The applicable entity provided data in accordance with Requirement R7 but the data was not provided according to the specified format.
Proposed Moderate VSL	The applicable entity provided data in accordance with Requirement R7 but was late by more than 30 calendar days but less than or equal to 60 calendar days per the specified schedule.
Proposed High VSL	The applicable entity provided data in accordance with Requirement R7 but was late by more than 60 calendar days but less than or equal to 90 calendar days per the specified schedule.
Proposed Severe VSL	The applicable entity provided data in accordance with Requirement R7 but was late by more than 90 calendar days per the specified schedule. OR The applicable entity failed to provide data in accordance with Requirement R7.
NERC VSL Guidelines Discussion	PRC-010-1 Requirement R7 meets NERC's VSL Guidelines in that the VSLs cover aspects of the requirement that are not equal in importance; there is an incremental aspect to the VSLs for tardiness and a binary aspect for failure.
FERC VSL G1 Discussion	**Guideline 1: Violation Severity Level Assignments Should Not Have the Unintended Consequence of Lowering the Current Level of Compliance** PRC-010-1 Requirement R7 is different in construct from the requirement it is replacing (PRC-021-1 Requirement R1) and, therefore, the VSLs cannot be compared. However, both sets of VSLs have incremental aspects and a binary aspect for failure.
FERC VSL G2 Discussion	**Guideline 2: Violation Severity Level Assignments Should Ensure Uniformity and Consistency in the Determination of Penalties** **Guideline 2a: The Single Violation Severity Level Assignment Category for "Binary" Requirements Is Not Consistent** N/A **Guideline 2b: Violation Severity Level Assignments that Contain Ambiguous Language** The proposed VSLs for PRC-010-1 Requirement R7 do not use any ambiguous terminology, thereby supporting uniformity and consistency in the determination of similar penalties for similar violations.
FERC VSL G3	**Guideline 3: Violation Severity Level Assignment Should Be Consistent with the Corresponding Requirement** The proposed VSLs for PRC-010-1 Requirement R7 use similar terminology to that used in the requirement and are therefore consistent with the requirement.

VRF and VSL Justifications – PRC-010-1 Requirement R7	
FERC VSL G4	**Guideline 4: Violation Severity Level Assignment Should Be Based on A Single Violation, Not on A Cumulative Number of Violations** The proposed VSLs for PRC-010-1 Requirement R7 are based on a single violation and not cumulative violations.

VRF and VSL Justifications – PRC-010-1 Requirement R8	
Proposed VRF	Lower
NERC VRF Discussion	PRC-010-1 Requirement R8 meets NERC's criterion for a Lower VRF. Though sharing a UVLS Program database with applicable entities in a timely manner supports an integrated and coordinated approach to UVLS programs, this is a planning requirement that is administrative in nature; failure to share the database within 30 calendar days of a request would not, under the anticipated Emergency, abnormal, or restorative conditions, be expected to adversely affect the electrical state or capability of the BES, or the ability to effectively monitor, control, or restore the BES. The applicable entities are always responsible for maintaining the reliability of the BES regardless of the situation.
FERC VRF G1 Discussion	**Guideline 1: Consistency w/ Blackout Report** N/A
FERC VRF G2 Discussion	**Guideline 2: Consistency within a Reliability Standard** The requirement has no parts so only one VRF was assigned.
FERC VRF G3 Discussion	**Guideline 3: Consistency among Reliability Standards** PRC-010-1 Requirement R8 is similar to PRC-006-1 Requirement R7, which has an approved VRF of Lower.
FERC VRF G4 Discussion	**Guideline 4: Consistency with NERC Definitions of VRFs** PRC-010-1 Requirement R8 meets NERC's criterion for a Lower VRF. Though sharing a UVLS Program database with applicable entities in a timely manner supports an integrated and coordinated approach to UVLS programs, this is a planning requirement that is administrative in nature; failure to share the database within 30 calendar days of a request would not, under the anticipated Emergency, abnormal, or restorative conditions, be expected to adversely affect the electrical state or capability of the BES, or the ability to effectively monitor, control, or restore the BES. The applicable entities are always responsible for maintaining the reliability of the BES regardless of the situation.
FERC VRF G5 Discussion	**Guideline 5: Treatment of Requirements that Co-mingle More than One Obligation** PRC-010-1 Requirement R8 does not co-mingle reliability objectives of differing risk; the assigned VRF of Lower is consistent throughout the requirement.
Proposed Lower VSL	The applicable entity provided its UVLS Program database in accordance with Requirement R8 but was late by less than or equal to 15 calendar days.
Proposed Moderate VSL	The applicable entity provided its UVLS Program database in accordance with Requirement R8 but was late by more than 15 calendar days but less than or equal to 30 calendar days.

VRF and VSL Justifications – PRC-010-1 Requirement R8	
Proposed High VSL	The applicable entity provided its UVLS Program database in accordance with Requirement R8 but was late by more than 30 calendar days but less than or equal to 45 calendar days.
Proposed Severe VSL	The applicable entity provided its UVLS Program database in accordance with Requirement R8 but was late by more than 45 calendar days. OR The applicable entity failed to provide its UVLS Program database in accordance with Requirement R8.
NERC VSL Guidelines Discussion	PRC-010-1 Requirement R8 meets NERC's VSL Guidelines in that there is an incremental aspect to the VSLs for tardiness and a binary aspect for failure.
FERC VSL G1 Discussion	**Guideline 1: Violation Severity Level Assignments Should Not Have the Unintended Consequence of Lowering the Current Level of Compliance** PRC-010-1 Requirement R8 is replacing PRC-020-1 Requirement R2, which is applicable to the Regional Reliability Organization and has no associated VSLs. Therefore, there is no prior level of compliance.
FERC VSL G2 Discussion	**Guideline 2: Violation Severity Level Assignments Should Ensure Uniformity and Consistency in the Determination of Penalties** **Guideline 2a: The Single Violation Severity Level Assignment Category for "Binary" Requirements Is Not Consistent** N/A **Guideline 2b: Violation Severity Level Assignments that Contain Ambiguous Language** The proposed VSLs for PRC-010-1 Requirement R8 do not use any ambiguous terminology, thereby supporting uniformity and consistency in the determination of similar penalties for similar violations.
FERC VSL G3	**Guideline 3: Violation Severity Level Assignment Should Be Consistent with the Corresponding Requirement** The proposed VSLs for PRC-010-1 Requirement R8 use similar terminology to that used in the requirement and are therefore consistent with the requirement.
FERC VSL G4	**Guideline 4: Violation Severity Level Assignment Should Be Based on A Single Violation, Not on A Cumulative Number of Violations** The proposed VSLs for PRC-010-1 Requirement R8 are based on a single violation and not cumulative violations.

NERC
NORTH AMERICAN ELECTRIC RELIABILITY CORPORATION

Standards Announcement

Project 2008-02.2 Phase 2 of Undervoltage Load Shedding (UVLS): Misoperations
PRC-004-5 and PRC-010-2

Final Ballot Open through April 27, 2015

Now Available

A final ballot for **PRC-004-5 – Protection System Misoperation Identification and Correction and PRC-010-2 – Under Voltage Load Shedding** is open through **8 p.m. Eastern, Monday, April 27, 2015**.

Balloting

In the final ballot, votes are counted by exception. Only members of the ballot pool may cast a vote. All ballot pool members may change their previously cast votes. A ballot pool member who failed to vote during the previous ballot period may vote in the final ballot period. If a ballot pool member does not participate in the final ballot, the member's vote from the previous ballot will be carried over as their vote in the final ballot.

Members of the ballot pool associated with this project may log in and submit their vote for the standard here. If you experience any difficulties in using the Standards Commenting & Balloting System, contact Arielle Cunningham.

Next Steps

The voting results for the standard will be posted and announced after the ballot closes. If approved, it will be submitted to the Board of Trustees for adoption and then filed with the appropriate regulatory authorities.

For information on the **Standards Development Process**, refer to the Standard Processes Manual.

For more information or assistance, contact Standards Developer, Scott Barfield-McGinnis (via email) or at (404) 446-9689.

North American Electric Reliability Corporation
3353 Peachtree Rd, NE
Suite 600, North Tower
Atlanta, GA 30326
404-446-2560 | www.nerc.com

NERC
NORTH AMERICAN ELECTRIC RELIABILITY CORPORATION

Standards Announcement

Project 2008-02.2 Phase 2 of Undervoltage Load Shedding (UVLS): Misoperations
PRC-004-5 and PRC-010-2

Final Ballot Results

Now Available

A final ballot for **PRC-004-5 – Protection System Misoperation Identification and Correction** and **PRC-010-2 – Under Voltage Load Shedding** concluded at **8 p.m. Eastern, Monday, April 27, 2015.**

The standard achieved a quorum and received sufficient affirmative votes for approval. Voting statistics are listed below, and the Ballot Results page provides a link to the detailed results for the ballot.

Quorum /Approval
84.86% / 89.63%

Next Steps
The standard will be submitted to the NERC Board of Trustees for adoption and then filed with the appropriate regulatory authorities.

For more information on the **Standards Development Process**, refer to the Standard Processes Manual.

For more information or assistance, contact Standards Developer, Scott Barfield-McGinnis (via email) or at (404) 446-9689.

North American Electric Reliability Corporation
3353 Peachtree Rd, NE
Suite 600, North Tower
Atlanta, GA 30326
404-446-2560 | www.nerc.com

BALLOT RESULTS

Ballot Name: 2008-02.2 Phase 2 UVLS PRC-004-5 & PRC-010-2 FN 2 ST
Voting Start Date: 4/17/2015 8:20:05 AM
Voting End Date: 4/27/2015 8:00:00 PM
Ballot Type: ST
Ballot Activity: FN
Ballot Series: 2
Total # Votes: 241
Total Ballot Pool: 284
Quorum: 84.86
Weighted Segment Value: 89.63

Segment	Ballot Pool	Segment Weight	Affirmative Votes	Affirmative Fraction	Negative Votes w/ Comment	Negative Fraction w/ Comment	Negative Votes w/o Comment	Abstain	No Vote
Segment: 1	76	1	38	0.884	5	0.116	0	22	11
Segment: 2	9	0.5	3	0.3	2	0.2	0	1	3
Segment: 3	67	1	35	0.946	2	0.054	0	18	12
Segment: 4	20	1	15	0.938	1	0.062	0	2	2
Segment: 5	60	1	34	0.895	4	0.105	0	13	9
Segment: 6	40	1	26	0.963	1	0.037	0	9	4
Segment: 7	1	0	0	0	0	0	0	0	1

© 2015 - NERC Ver 1.3.5.9 Machine Name: ERODVSBSWB02

Segment: 9	2	0.1	1	0.1	0	0	0	0	1
Segment: 10	7	0.7	6	0.6	1	0.1	0	0	0
Totals:	284	6.5	160	5.826	16	0.674	0	65	43

BALLOT POOL MEMBERS

Show All entries

Search: Search

Segment	Organization	Voter	Designated Proxy	Ballot	NERC Memo
1	AEP - AEP Service Corporation	paul johnson		Negative	N/A
1	Ameren - Ameren Services	Eric Scott		Affirmative	N/A
1	Associated Electric Cooperative, Inc.	Phil Hart		Affirmative	N/A
1	ATCO Electric	David Downey	Dan Bamber	Abstain	N/A
1	Austin Energy	Thomas Standifur		Affirmative	N/A
1	Balancing Authority of Northern California	Kevin Smith	Joe Tarantino	Affirmative	N/A
1	Basin Electric Power Cooperative	David Rudolph		None	N/A
1	BC Hydro and Power Authority	Patricia Robertson		Abstain	N/A
1	Beaches Energy Services	Don Cuevas		Affirmative	N/A

1	Berkshire Hathaway Energy - MidAmerican Energy Co.	Terry Harbour		Affirmative	N/A
1	Bonneville Power Administration	Donald Watkins		Affirmative	N/A
1	Brazos Electric Power Cooperative, Inc.	Tony Kroskey		None	N/A
1	Bryan Texas Utilities	John Fontenot		Affirmative	N/A
1	CenterPoint Energy Houston Electric, LLC	John Brockhan		Abstain	N/A
1	Central Electric Power Cooperative (Missouri)	Michael Bax		Abstain	N/A
1	Cleco Corporation	John Lindsey	Louis Guidry	None	N/A
1	Colorado Springs Utilities	Shawna Speer		Affirmative	N/A
1	Con Ed - Consolidated Edison Co. of New York	Chris de Graffenried		Affirmative	N/A
1	CPS Energy	Glenn Pressler		Affirmative	N/A
1	Dairyland Power Cooperative	Robert Roddy		Affirmative	N/A
1	Dominion - Dominion Virginia Power	Larry Nash		Abstain	N/A
1	Duke Energy	Doug Hils		Affirmative	N/A
1	Edison International - Southern California Edison Company	Steven Mavis		Affirmative	N/A
1	Empire District Electric Co.	Ralph Meyer		None	N/A
1	Entergy - Entergy Services, Inc.	Oliver Burke		Negative	N/A
1	Exelon	Chris Scanlon		Affirmative	N/A
1	FirstEnergy - FirstEnergy Corporation	William Smith		Affirmative	N/A
1	Georgia Transmission	Jason Snodgrass	Greg Davis	Affirmative	N/A

	Corporation				
1	Great Plains Energy - Kansas City Power and Light Co.	Daniel Gibson		Affirmative	N/A
1	Great River Energy	Gordon Pietsch		Affirmative	N/A
1	Hydro One Networks, Inc.	Payam Farahbakhsh		Affirmative	N/A
1	Hydro-Qu?bec TransEnergie	Martin Boisvert		Affirmative	N/A
1	IDACORP - Idaho Power Company	Molly Devine		Affirmative	N/A
1	International Transmission Company Holdings Corporation	Michael Moltane		Abstain	N/A
1	KAMO Electric Cooperative	Walter Kenyon		Abstain	N/A
1	Long Island Power Authority	Robert Ganley		None	N/A
1	Los Angeles Department of Water and Power	faranak sarbaz		None	N/A
1	M and A Electric Power Cooperative	William Price		Abstain	N/A
1	Manitoba Hydro	Mike Smith		Affirmative	N/A
1	Minnkota Power Cooperative Inc.	Theresa Allard		Abstain	N/A
1	Muscatine Power and Water	Andy Kurriger		Affirmative	N/A
1	N.W. Electric Power Cooperative, Inc.	Mark Ramsey		Abstain	N/A
1	National Grid USA	Michael Jones		Negative	N/A
1	NB Power Corporation	Alan MacNaughton		Abstain	N/A
1	Nebraska Public Power District	Jamison Cawley		Affirmative	N/A

1	NextEra Energy - Florida Power and Light Co.	Mike ONeil		Affirmative	N/A
1	NiSource - Northern Indiana Public Service Co.	Julaine Dyke		Abstain	N/A
1	Northeast Missouri Electric Power Cooperative	Kevin White		Abstain	N/A
1	OGE Energy - Oklahoma Gas and Electric Co.	Terri Pyle		Affirmative	N/A
1	Oncor Electric Delivery	Rod Kinard	Gul Khan	Affirmative	N/A
1	PHI - Potomac Electric Power Co.	David Thorne		Affirmative	N/A
1	Platte River Power Authority	John Collins		Affirmative	N/A
1	PNM Resources - Public Service Company of New Mexico	Laurie Williams		Abstain	N/A
1	Portland General Electric Co.	John Walker		Abstain	N/A
1	PPL Electric Utilities Corporation	Brenda Truhe		Abstain	N/A
1	PSEG - Public Service Electric and Gas Co.	Joseph Smith		Affirmative	N/A
1	Public Utility District No. 1 of Snohomish County	Long Duong		Affirmative	N/A
1	Public Utility District No. 2 of Grant County, Washington	Michiko Sell		None	N/A
1	Puget Sound Energy, Inc.	Denise Lietz		Negative	N/A
1	Sacramento Municipal Utility District	Tim Kelley	Joe Tarantino	Affirmative	N/A
1	Santee Cooper	Shawn Abrams		Abstain	N/A

1	SaskPower	Wayne Guttormson		None	N/A
1	SCANA - South Carolina Electric and Gas Co.	Tom Hanzlik		Abstain	N/A
1	Seattle City Light	Pawel Krupa		Affirmative	N/A
1	Seminole Electric Cooperative, Inc.	Mark Churilla	Bret Galbraith	Abstain	N/A
1	Sho-Me Power Electric Cooperative	Denise Stevens		None	N/A
1	Southern Company - Southern Company Services, Inc.	Robert A. Schaffeld		Affirmative	N/A
1	Southwest Transmission Cooperative, Inc.	John Shaver		Negative	N/A
1	Tacoma Public Utilities (Tacoma, WA)	John Merrell		Abstain	N/A
1	Tallahassee Electric (City of Tallahassee, FL)	Scott Langston		Abstain	N/A
1	Tennessee Valley Authority	Howell Scott		Affirmative	N/A
1	Tri-State G and T Association, Inc.	Tracy Sliman		Affirmative	N/A
1	U.S. Bureau of Reclamation	Richard Jackson		None	N/A
1	Westar Energy	Kevin Giles		Abstain	N/A
1	Western Area Power Administration	Steve Johnson		None	N/A
1	Xcel Energy, Inc.	Greg Pieper		Affirmative	N/A
2	BC Hydro and Power Authority	Venkataramakrishnan Vinnakota		Abstain	N/A
2	California ISO	Richard Vine		Negative	N/A
2	Electric Reliability Council of Texas, Inc.	christina bigelow		Affirmative	N/A
2	Herb Schrayshuen	Herb Schrayshuen		Affirmative	N/A

2	Independent Electricity System Operator	Leonard Kula	Mark Wilson	Negative	N/A
2	ISO New England, Inc.	Matthew Goldberg		None	N/A
2	Midcontinent ISO, Inc.	Terry BIlke		None	N/A
2	New York Independent System Operator	Gregory Campoli		None	N/A
2	PJM Interconnection, L.L.C.	Mark Holman		Affirmative	N/A
3	AEP	Michael DeLoach		None	N/A
3	Ameren - Ameren Services	David Jendras		Affirmative	N/A
3	APS - Arizona Public Service Co.	Sarah Kist		Affirmative	N/A
3	Associated Electric Cooperative, Inc.	Todd Bennett		Abstain	N/A
3	Austin Energy	Lisa Martin		Affirmative	N/A
3	Avista - Avista Corporation	Scott Kinney		Abstain	N/A
3	Basin Electric Power Cooperative	Jeremy Voll		Affirmative	N/A
3	BC Hydro and Power Authority	Pat Harrington		Abstain	N/A
3	Beaches Energy Services	Steven Lancaster		Affirmative	N/A
3	Berkshire Hathaway Energy - MidAmerican Energy Co.	Thomas Mielnik	Darnez Gresham	Affirmative	N/A
3	Bonneville Power Administration	Rebecca Berdahl		Affirmative	N/A
3	Central Electric Power Cooperative (Missouri)	Adam Weber		Abstain	N/A
3	City of Green Cove Springs	Mark Schultz		Affirmative	N/A

3	City of Leesburg	Chris Adkins		Affirmative	N/A
3	City of Redding	Bill Hughes	Mary Downey	Affirmative	N/A
3	City Utilities of Springfield, Missouri	Scott Williams		Abstain	N/A
3	Cleco Corporation	Michelle Corley	Louis Guidry	None	N/A
3	Con Ed - Consolidated Edison Co. of New York	Peter Yost		Affirmative	N/A
3	CPS Energy	Brian Bartos		Affirmative	N/A
3	Dominion - Dominion Resources, Inc.	Connie Lowe		Abstain	N/A
3	Duke Energy	Lee Schuster		Affirmative	N/A
3	Exelon	John Bee		Affirmative	N/A
3	Fayetteville Public Works Commission	Allen Wallace		None	N/A
3	FirstEnergy - FirstEnergy Corporation	Cindy Stewart	Richard Hoag	Affirmative	N/A
3	Florida Municipal Power Agency	Joe McKinney		Affirmative	N/A
3	Georgia System Operations Corporation	Scott McGough		Affirmative	N/A
3	Great Plains Energy - Kansas City Power and Light Co.	Joshua Bach		Affirmative	N/A
3	Great River Energy	Brian Glover		Negative	N/A
3	Hydro One Networks, Inc.	Paul Malozewski		Affirmative	N/A
3	Integrys Energy Group, Inc. - Wisconsin Public Service Corporation	Greg LeGrave		None	N/A
3	KAMO Electric Cooperative	Ted Hilmes		Abstain	N/A
3	Lincoln Electric System	Jason Fortik		Abstain	N/A
3	Los Angeles	Mike Anctil		None	N/A

	Department of Water and Power				
3	M and A Electric Power Cooperative	Stephen Pogue		Abstain	N/A
3	Manitoba Hydro	Karim Abdel-Hadi		Affirmative	N/A
3	Modesto Irrigation District	Jack Savage	Nick Braden	Affirmative	N/A
3	Muscatine Power and Water	Seth Shoemaker		Affirmative	N/A
3	National Grid USA	Brian Shanahan		Negative	N/A
3	Nebraska Public Power District	Tony Eddleman		Affirmative	N/A
3	NiSource - Northern Indiana Public Service Co.	Ramon Barany		Abstain	N/A
3	Northeast Missouri Electric Power Cooperative	Skyler Wiegmann		Abstain	N/A
3	Northeast Utilities	Mark Kenny		None	N/A
3	NW Electric Power Cooperative, Inc.	John Stickley		Abstain	N/A
3	Ocala Utility Services	Randy Hahn		None	N/A
3	OGE Energy - Oklahoma Gas and Electric Co.	Donald Hargrove		Affirmative	N/A
3	Pacific Gas and Electric Company	John Hagen		Affirmative	N/A
3	PHI - Potomac Electric Power Co.	Mark Yerger		Affirmative	N/A
3	Platte River Power Authority	Terry Baker		Affirmative	N/A
3	PPL - Louisville Gas and Electric Co.	Charles Freibert		Abstain	N/A
3	PSEG - Public Service Electric and Gas Co.	Jeffrey Mueller		Affirmative	N/A

3	Rutherford EMC	Tom Haire		None	N/A
3	Sacramento Municipal Utility District	Rachel Moore	Joe Tarantino	Affirmative	N/A
3	Salt River Project	John Coggins		None	N/A
3	Santee Cooper	James Poston		Abstain	N/A
3	SCANA - South Carolina Electric and Gas Co.	Clay Young		None	N/A
3	Seattle City Light	Dana Wheelock		Affirmative	N/A
3	Seminole Electric Cooperative, Inc.	James Frauen		Abstain	N/A
3	Sho-Me Power Electric Cooperative	Jeff Neas		None	N/A
3	Snohomish County PUD No. 1	Mark Oens		Affirmative	N/A
3	Southern Company - Alabama Power Company	R. Scott Moore		Affirmative	N/A
3	Tacoma Public Utilities (Tacoma, WA)	Marc Donaldson		Abstain	N/A
3	Tallahassee Electric (City of Tallahassee, FL)	John Williams		Abstain	N/A
3	TECO - Tampa Electric Co.	Ronald Donahey		None	N/A
3	Tennessee Valley Authority	Ian Grant		Affirmative	N/A
3	Tri-State G and T Association, Inc.	Janelle Marriott Gill		Affirmative	N/A
3	Westar Energy	Bo Jones		Abstain	N/A
3	Xcel Energy, Inc.	Michael Ibold		Affirmative	N/A
4	Alliant Energy Corporation Services, Inc.	Kenneth Goldsmith		Affirmative	N/A

4	Austin Energy	Tina Garvey		Affirmative	N/A
4	City of Clewiston	Lynne Mila		Affirmative	N/A
4	City of New Smyrna Beach Utilities Commission	Tim Beyrle		Affirmative	N/A
4	City of Redding	Nick Zettel	Mary Downey	Affirmative	N/A
4	City of Winter Park	Mark Brown		Affirmative	N/A
4	FirstEnergy - Ohio Edison Company	Doug Hohlbaugh		Affirmative	N/A
4	Florida Municipal Power Agency	Carol Chinn		Affirmative	N/A
4	Fort Pierce Utilities Authority	Thomas Parker		None	N/A
4	Georgia System Operations Corporation	Guy Andrews		Affirmative	N/A
4	Illinois Municipal Electric Agency	Bob Thomas		Affirmative	N/A
4	Integrys Energy Group, Inc. - Wisconsin Public Service Corporation	Christopher Plante		Abstain	N/A
4	Keys Energy Services	Stanley Rzad		Affirmative	N/A
4	MGE Energy - Madison Gas and Electric Co.	Joseph DePoorter		Affirmative	N/A
4	Modesto Irrigation District	Spencer Tacke		None	N/A
4	Public Utility District No. 1 of Snohomish County	John Martinsen		Affirmative	N/A
4	Sacramento Municipal Utility District	Michael Ramirez	Joe Tarantino	Affirmative	N/A
4	Seattle City Light	Hao Li		Affirmative	N/A
4	Tacoma Public Utilities (Tacoma, WA)	Keith Morisette		Abstain	N/A
4	Utility Services, Inc.	Brian Evans-Mongeon		Negative	N/A

5	AEP	Thomas Foltz		Negative	N/A
5	Ameren - Ameren Missouri	Sam Dwyer		Affirmative	N/A
5	APS - Arizona Public Service Co.	Scott Takinen		Affirmative	N/A
5	Associated Electric Cooperative, Inc.	Matthew Pacobit		Abstain	N/A
5	Austin Energy	Jeanie Doty		Affirmative	N/A
5	Basin Electric Power Cooperative	Mike Kraft		Affirmative	N/A
5	Black Hills Corporation	George Tatar		Abstain	N/A
5	Boise-Kuna Irrigation District - Lucky Peak Power Plant Project	Mike Kukla		Affirmative	N/A
5	Bonneville Power Administration	Francis Halpin		Affirmative	N/A
5	Brazos Electric Power Cooperative, Inc.	Shari Heino		Negative	N/A
5	Choctaw Generation Limited Partnership, LLLP	Rob Watson		None	N/A
5	City of Independence, Power and Light Department	Jim Nail		Affirmative	N/A
5	Cleco Corporation	Stephanie Huffman	Louis Guidry	None	N/A
5	CMS Energy - Consumers Energy Company	David Greyerbiehl		Affirmative	N/A
5	Colorado Springs Utilities	Kaleb Brimhall		Affirmative	N/A
5	Con Ed - Consolidated Edison Co. of New York	Brian O'Boyle		Affirmative	N/A
5	Dairyland Power Cooperative	Tommy Drea		Affirmative	N/A
5	Dominion - Dominion	Randi Heise		Abstain	N/A

	Resources, Inc.				
5	DTE Energy - Detroit Edison Company	Jeffrey DePriest		Affirmative	N/A
5	Duke Energy	Dale Goodwine		Affirmative	N/A
5	Dynegy Inc.	Dan Roethemeyer		Abstain	N/A
5	Exelon	Vince Catania		Affirmative	N/A
5	FirstEnergy - FirstEnergy Solutions	Robert Loy		Affirmative	N/A
5	Florida Municipal Power Agency	David Schumann		Affirmative	N/A
5	Golden Spread Electric Cooperative, Inc.	Chip Koloini		None	N/A
5	Great Plains Energy - Kansas City Power and Light Co.	Brett Holland		Affirmative	N/A
5	Great River Energy	Preston Walsh		Affirmative	N/A
5	Hydro-Qu?bec Production	Roger Dufresne		Abstain	N/A
5	Integrys Energy Group, Inc. - Wisconsin Public Service Corporation	Scott Johnson		Abstain	N/A
5	JEA	John Babik		Abstain	N/A
5	Kissimmee Utility Authority	Mike Blough		Affirmative	N/A
5	Lakeland Electric	Jim Howard		Affirmative	N/A
5	Liberty Electric Power LLC	Daniel Duff		None	N/A
5	Lincoln Electric System	Kayleigh Wilkerson		Abstain	N/A
5	Lower Colorado River Authority	Dixie Wells		Affirmative	N/A
5	Luminant - Luminant Generation Company LLC	Rick Terrill		None	N/A

5	Manitoba Hydro	Yuguang Xiao		Affirmative	N/A
5	Massachusetts Municipal Wholesale Electric Company	David Gordon		Abstain	N/A
5	Muscatine Power and Water	Mike Avesing		Affirmative	N/A
5	Nebraska Public Power District	Don Schmit		Affirmative	N/A
5	NiSource - Northern Indiana Public Service Co.	Michael Melvin		Abstain	N/A
5	OGE Energy - Oklahoma Gas and Electric Co.	Leo Staples		Affirmative	N/A
5	Oglethorpe Power Corporation	Bernard Johnson		Negative	N/A
5	Omaha Public Power District	Mahmood Safi		Affirmative	N/A
5	Pacific Gas and Electric Company	Alex Chua		Affirmative	N/A
5	Platte River Power Authority	Tyson Archie		Affirmative	N/A
5	Public Utility District No. 1 of Snohomish County	Sam Nietfeld		Affirmative	N/A
5	Puget Sound Energy, Inc.	Lynda Kupfer		Negative	N/A
5	Sacramento Municipal Utility District	Susan Gill-Zobitz	Joe Tarantino	Affirmative	N/A
5	Salt River Project	Kevin Nielsen		None	N/A
5	SCANA - South Carolina Electric and Gas Co.	Edward Magic		None	N/A
5	Seattle City Light	Mike Haynes		Affirmative	N/A
5	Southern Company - Southern Company Generation	William D. Shultz		Affirmative	N/A

5	Tacoma Public Utilities (Tacoma, WA)	Chris Mattson		Abstain	N/A
5	Tallahassee Electric (City of Tallahassee, FL)	Karen Webb		Abstain	N/A
5	TECO - Tampa Electric Co.	R James Rocha		None	N/A
5	Tennessee Valley Authority	Brandy Spraker		Affirmative	N/A
5	U.S. Bureau of Reclamation	Erika Doot		None	N/A
5	Westar Energy	stephanie johnson		Abstain	N/A
5	Xcel Energy, Inc.	Mark Castagneri		Affirmative	N/A
6	AEP - AEP Marketing	Edward P Cox		Negative	N/A
6	Ameren - Ameren Services	Robert Quinlivan		Affirmative	N/A
6	APS - Arizona Public Service Co.	Randy Young		Affirmative	N/A
6	Associated Electric Cooperative, Inc.	Brian Ackermann		Abstain	N/A
6	Austin Energy	Andrew Gallo		Affirmative	N/A
6	Berkshire Hathaway - PacifiCorp	Sandra Shaffer		Affirmative	N/A
6	Bonneville Power Administration	Brenda Anderson		Affirmative	N/A
6	City of Redding	Marvin Briggs	Mary Downey	Affirmative	N/A
6	Cleco Corporation	Robert Hirchak	Louis Guidry	None	N/A
6	Colorado Springs Utilities	Shannon Fair		Affirmative	N/A
6	Con Ed - Consolidated Edison Co. of New York	Robert Winston		Affirmative	N/A
6	Dominion - Dominion Resources, Inc.	Louis Slade		Abstain	N/A

6	Duke Energy	Greg Cecil		Affirmative	N/A
6	Exelon	Dave Carlson		Affirmative	N/A
6	FirstEnergy - FirstEnergy Solutions	Ann Ivanc		Affirmative	N/A
6	Florida Municipal Power Agency	Richard Montgomery		Affirmative	N/A
6	Florida Municipal Power Pool	Tom Reedy		None	N/A
6	Great River Energy	Donna Stephenson	Michael Brytowski	Affirmative	N/A
6	Lincoln Electric System	Eric Ruskamp		Abstain	N/A
6	Lower Colorado River Authority	Michael Shaw		Affirmative	N/A
6	Luminant - Luminant Energy	Brenda Hampton		Abstain	N/A
6	Manitoba Hydro	Blair Mukanik		Affirmative	N/A
6	Modesto Irrigation District	James McFall	Nick Braden	Affirmative	N/A
6	NextEra Energy - Florida Power and Light Co.	Silvia Mitchell		Affirmative	N/A
6	NiSource - Northern Indiana Public Service Co.	Joe O'Brien		Abstain	N/A
6	OGE Energy - Oklahoma Gas and Electric Co.	Jerry Nottnagel		None	N/A
6	Oglethorpe Power Corporation	Donna Johnson		None	N/A
6	Platte River Power Authority	Carol Ballantine		Affirmative	N/A
6	Portland General Electric Co.	Shawn Davis		Abstain	N/A
6	PSEG - PSEG Energy Resources and Trade	Stephen York		Affirmative	N/A

	LLC				
6	Sacramento Municipal Utility District	Diane Clark	Joe Tarantino	Affirmative	N/A
6	Salt River Project	William Abraham		Affirmative	N/A
6	Seattle City Light	Dennis Sismaet		Affirmative	N/A
6	Seminole Electric Cooperative, Inc.	Trudy Novak		Abstain	N/A
6	Snohomish County PUD No. 1	Kenn Backholm		Affirmative	N/A
6	Southern Company - Southern Company Generation and Energy Marketing	John J. Ciza		Affirmative	N/A
6	Tacoma Public Utilities (Tacoma, WA)	Rick Applegate		Abstain	N/A
6	Tennessee Valley Authority	Marjorie Parsons		Affirmative	N/A
6	Westar Energy	Tiffany Lake		Abstain	N/A
6	Xcel Energy, Inc.	Peter Colussy		Affirmative	N/A
7	Siemens - Siemens PTI	Frank McElvain		None	N/A
8	David Kiguel	David Kiguel		Affirmative	N/A
8	Massachusetts Attorney General	Frederick Plett		Affirmative	N/A
9	City of Vero Beach	Ginny Beigel		Affirmative	N/A
9	National Association of Regulatory Utility Commissioners	Jerry Maio		None	N/A
10	Florida Reliability Coordinating Council	Peter Heidrich		Affirmative	N/A
10	Midwest Reliability Organization	Russel Mountjoy		Affirmative	N/A
10	Northeast Power Coordinating Council	Guy V. Zito		Affirmative	N/A

10	ReliabilityFirst	Anthony Jablonski		Affirmative	N/A
10	Southwest Power Pool Regional Entity	Bob Reynolds		Affirmative	N/A
10	Texas Reliability Entity, Inc.	Rachel Coyne		Negative	N/A
10	Western Electricity Coordinating Council	Steven Rueckert		Affirmative	N/A

Previous 1 Next

Showing 1 to 284 of 284 entries

Exhibit G

Standard Drafting Team Roster

NERC
NORTH AMERICAN ELECTRIC RELIABILITY CORPORATION

Team Roster

Project 2008-02.2 Phase 2 of Undervoltage Load Shedding (UVLS): Misoperations Standard Drafting Team

	Participant	Entity
Chair	Greg Vassallo	Bonneville Power Administration (BPA)
Member	José Conto	Electric Reliability Council of Texas (ERCOT)
Member	Bill Harm	PJM Interconnection, LLC
Member	Sharma Kolluri	Entergy
Member	Charles-Eric Langlois	Hydro-Québec TransÉnergie
Member	Manish Patel	Southern Company
Member	Fabio Rodriguez, P.E.	Duke Energy – Florida
Member	Hari Singh	Xcel Energy
Member	Matthew H. Tackett, P.E.	Midcontinent Independent System Operator (MISO)
NERC staff	Scott Barfield-McGinnis, P.E. (Standards Developer)[1]	North American Electric Reliability Corporation (NERC)
NERC staff	Erika Chanzes (Standards Developer)[2]	North American Electric Reliability Corporation (NERC)
NERC staff	Shamai Elstein (Senior Counsel)	North American Electric Reliability Corporation (NERC)
NERC staff	Lacey Ourso(Standards Developer)[3]	North American Electric Reliability Corporation (NERC)
NERC staff	Kathrine Street (Standards Developer)[4]	North American Electric Reliability Corporation (NERC)

[1] Led 2008-02.2 Phase 2 to align PRC-010-1 with PRC-004-3.

[2] Initiated 2008-02 to revise PRC-010-0 and retire PRC-020-1, PRC-021-1, and PRC-022-1.

[3] Led 2008-02 work to revise PRC-006-1.

[4] Finished 2008-02 to revise PRC-010-0 and retire PRC-020-1, PRC-021-1, and PRC-022-1 due to E. Chanzes reassignment.

Version	Date	Description
1.0	05/21/13	Initial posting
2.0	06/07/13	Corrected F. Rodriguez's entity name
3.0	08/26/13	Removed B. Joffs from roster due to resignation from SDT
4.0	10/01/13	Removed A. Sleva from roster due to resignation from SDT
5.0	01/15/2015	Removed P. Tatro from roster due to resignation from NERC Added footnotes and W. Edwards
6.0	03/18/2015	Removed W. Edwards from roster due to resignation from NERC