NERC
NORTH AMERICAN ELECTRIC RELIABILITY CORPORATION

ERSWG and DERTF

NERC Update

Pooja Shah
ERSWG & DERTF
June 8, 2016

RELIABILITY | ACCOUNTABILITY




PC & OC Update

- PC would appreciate more information on Measure 6
  - Recommend an information only webinar when the group has a solid methodology on paper – similar to what has been done in the past
- OC Comment – common mode failure for Inverter Software

ERS & DER Timeline

- ERSWG Sufficiency Guideline Whitepaper
  - No NERC Board approval needed
  - Send to NERC Board for Information
  - Still due by EOY 2016
- DERTF Final Report – **Board approval needed**
  - Seek Acceptance of Report from OC/PC in December 2016
  - Present to NERC Board of Trustees - TBD
- Next Steps
  - Revise schedules and provide an update to OC and PC right away

DER Workshop

- Save-the-Date was sent out on Friday June 3
- Workshop Dates - August 2-3, 2016 half day each
- More details on logistics to follow

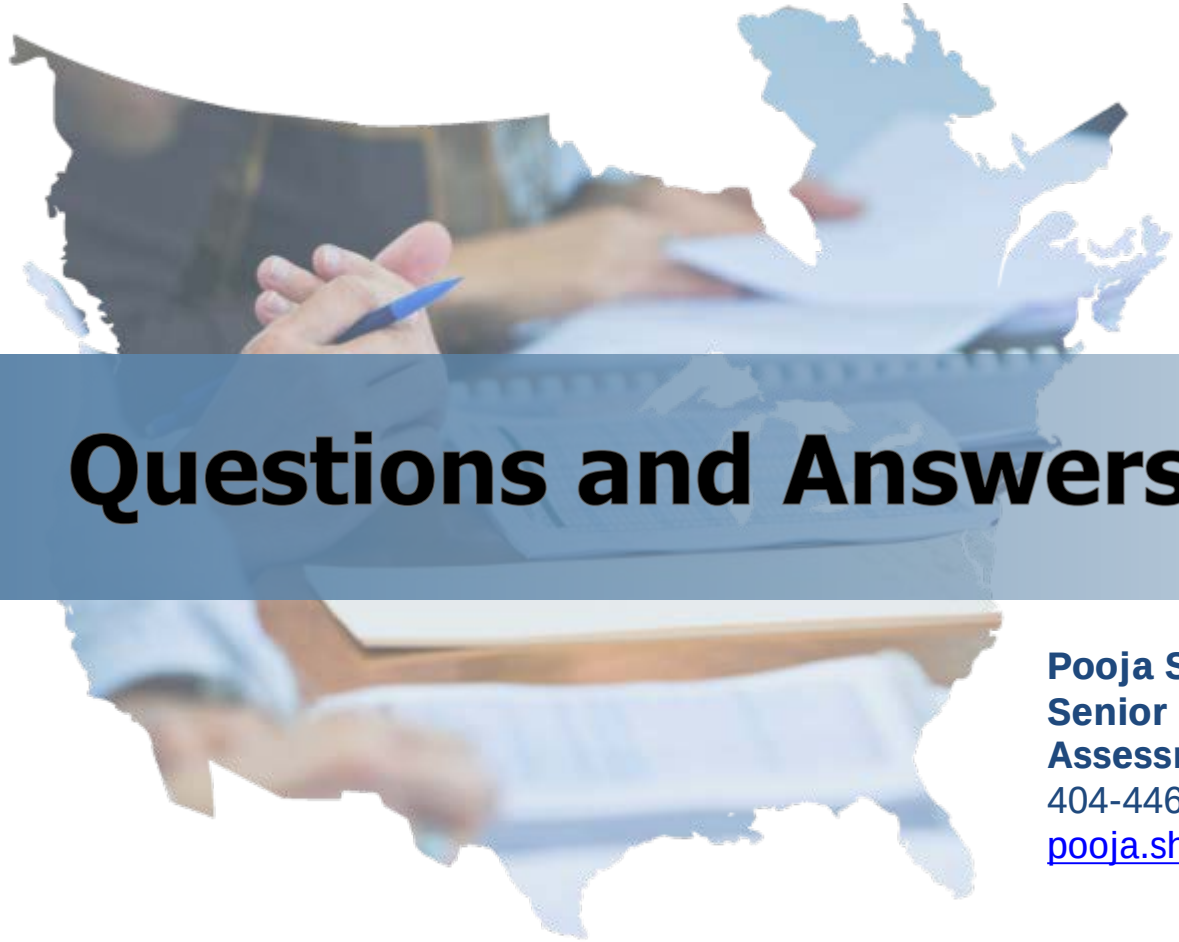

Questions and Answers

Pooja Shah
Senior Engineer, Reliability Assessment
404-446-9621 office | 404-710-0502 cell
pooja.shah@nerc.net

NERC
NORTH AMERICAN ELECTRIC RELIABILITY CORPORATION

Distributed Energy Resources

Connection, Modeling and Reliability Considerations

November 2016

RELIABILITY | ACCOUNTABILITY




3353 Peachtree Road NE
Suite 600, North Tower
Atlanta, GA 30326
404-446-2560 | www.nerc.com

Table of Contents

Preface

The North American Electric Reliability Corporation (NERC) is a not-for-profit international regulatory authority whose mission is to assure the reliability of the bulk power system (BPS) in North America. NERC develops and enforces Reliability Standards; annually assesses seasonal and long-term reliability; monitors the BPS through system awareness; and educates, trains, and certifies industry personnel. NERC's area of responsibility spans the continental United States, Canada, and the northern portion of Baja California, Mexico. NERC is the electric reliability organization (ERO) for North America, subject to oversight by the Federal Energy Regulatory Commission (FERC) and governmental authorities in Canada. NERC's jurisdiction includes users, owners, and operators of the BPS, which serves more than 334 million people.

The North American BPS is divided into eight Regional Entity (RE) boundaries as shown in the map and corresponding table below.

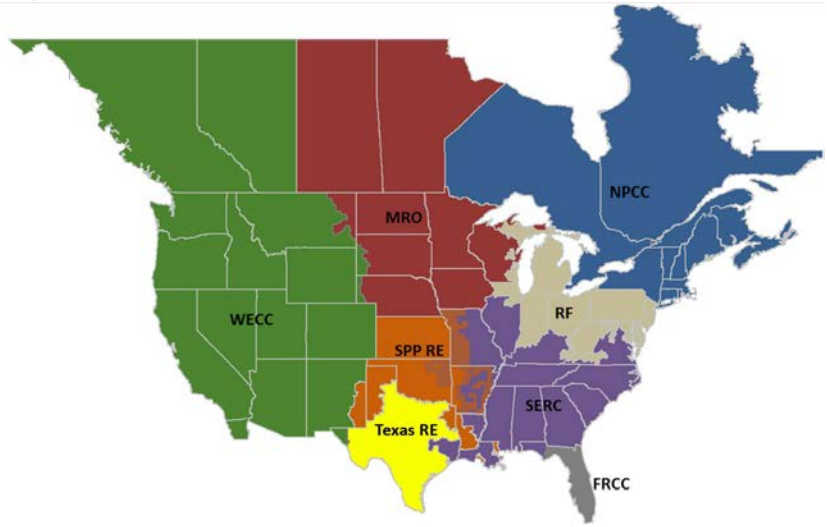

The North American BPS is divided into eight Regional Entity (RE) boundaries. The highlighted areas denote overlap as some load-serving entities participate in one Region while associated transmission owners/operators participate in another.

FRCC	Florida Reliability Coordinating Council
MRO	Midwest Reliability Organization
NPCC	Northeast Power Coordinating Council
RF	ReliabilityFirst
SERC	SERC Reliability Corporation
SPP RE	Southwest Power Pool Regional Entity
Texas RE	Texas Reliability Entity
WECC	Western Electricity Coordinating Council

Executive Summary

*(**DELETE RED TEXT PRIOR TO PUBLISHING**) The Executive Summary should be the last part of the report written. The tone is that of a high-level narrator; the Exec Sum should not be as detailed as the body of the report. **DO NOT COPY AND PASTE** anything from the report into the Exec Sum, including graphs, charts, figures, or tables. Write new content that briefs the executive on the main point of the report. Allow the rest of the report to go into the details. Those visuals should be used in the body of the report—and only once—to support data findings.*

The Executive Summary should include:

1. *The purpose statement*
2. *Summary of conclusions and findings*
3. *Summary of recommendations*

Introduction

*(**DELETE RED TEXT PRIOR TO PUBLISHING**) Think of the Introduction and the Conclusion as the bookends that hold the report together. The purpose of the Introduction is to brief the reader on what the report will cover. It is not a summary of the report, and it should not include conclusions or recommendations.*

The Introduction should include:

4. *The purpose statement*
5. *The objectives*
6. *Background information on subject matter (Note: Background is not its own chapter; it is part of the Introduction and can be a subheading listed here)*
7. *Limitations in research performance*
8. *Significance of research*

Background

Example text, delete before publishing. Example text, delete before publishing. Example text, delete before publishing. Example text, delete before publishing. Example text, delete before publishing. Example text, delete before publishing. Example text, delete before publishing. Example text, delete before publishing. Example text, delete before publishing. Example text, delete before publishing. Example text, delete before publishing. Example text, delete before publishing. Example text, delete before publishing. Example text, delete before publishing. Example text, delete before publishing. Example text, delete before publishing. Example text, delete before publishing. Example text, delete before publishing. Example text, delete before publishing.

Example text, delete before publishing. Example text, delete before publishing. Example text, delete before publishing. Example text, delete before publishing. Example text, delete before publishing. Example text, delete before publishing. Example text, delete before publishing. Example text, delete before publishing. Example text, delete before publishing. Example text, delete before publishing. Example text, delete before publishing. Example text, delete before publishing. Example text, delete before publishing.

(DELETE RED TEXT PRIOR TO PUBLISHING) *You must use the "next page" section break at the end of each chapter. If you use a regular page break when you intend to start a new section, the header will appear with the title and this is something you want to avoid.*

There is an important section break that starts on the next page. The front matter, which includes the Preface, Executive Summary, and Introduction, ends after this page (as do the roman numerals for page numbers). If you want to include more pages in the front matter, make sure that you add them before this break. To view the break, click the Paragraph symbol from the Home tab on the Word ribbon. If you are finished adding pages to the front matter, begin the body of the report with text beneath the Chapter 1 heading.

Chapter 1 - What are Distributed Energy Resources?

What are Distributed Energy Resources? – *Brian Evans-Mongeon, Layne Brown, Sylvester Toe, Tony Jankowski, Gary Keenan*

a. Definitions
   i. Functional Model - NERC
b. Behind the Meter Generation (BTMG)
   i. Size/scale
   ii. Net metering arrangements
   iii. Customer owned
c. Distributed Generation (DG)
   i. Directly connected to utility distribution facilities
   ii. Interconnected generator resource
d. Demand Response
e. Typical resources? Solar, small hydro, wind, what?

Distributed Energy Resource (DER): Any non-BES real or reactive resource (generating unit, multiple generating units at a single location, distributive generator, etc.) located solely within the boundary of any distribution utility, Distribution Provider, or Distribution Provider-UFLS Only, including:

- Distribution Generation (DG): Any non-BES generating unit or multiple generating units at a single location owned ~~and~~ and/or operated by 1) the distribution utility, or 2) a merchant entity.
- ~~Distribution Independent Power resource (DIP): Any non-BES IPP generating unit or multiple generating units at a single location owned and or operated by a merchant entity.~~
- Behind The Meter Generation (BTMG): A generating unit or multiple generating units at a single location (regardless of ownership), of any nameplate size, on the customer's side of the retail meter that serve all or part of the customer's retail Load with electric energy. All electrical equipment from and including the generation set up to the metering point is considered to be behind-the-meter. This definition includes any generation identified under E2 of the NERC BES Definition.
- Demand-Side Management (DSM) (see NERC definition: All activities or programs undertaken by any applicable entity to achieve a reduction in Demand)
- Cogeneration (see NERC definition: Production of electricity from steam, heat, or other forms of energy produced as a by-product of another process)
- Emergency, Stand-by, or Back up generation (BUG): A generating unit, regardless of size, that serves in times of emergency at locations providing basis or elemental needs of the customer or distribution system. This definition only applies to resources on the utility side of the customer retail meter.
- ~~Load Management Resource (LMR): Any load reduction effort (non-generation) that reduces Demand up to the Demand of feeder or individual End-user.~~

Formatted: Strikethrough

Formatted: Strikethrough

Chapter 2 - How are Distributed Energy Resources Connected?

How are Distributed Energy Resources connected? – *Sylvester Toe*

a. Low voltage BTMG – NEC code and utility requirements
b. Distributed Generation – NESC and utility requirements
c. Metering – what data goes back to BA or utility? Real-time, hourly, monthly read?

DERs as defined within this document are generally interconnected to a Distribution Provider's electric system at primary voltage (≤ 100 kV but > 1 kV) and/or secondary voltage (≤ 1 kV). Interconnection design and installation typically meet requirements of the National Electric Code, the National Electrical Safety Code and any other local code pertaining to electrical facility design, construction, or safety. Sample interconnection one-line diagrams of different types of DERs that are currently operating in parallel with a Distribution Provider's electric system in the southeastern part of the United States are shown in the following figures. Shown in each figure are a point of change of equipment ownership, bi-directional meter and a visible air-gap switch.

The point of change of equipment ownership ("POCEO") defines the point where equipment owned and operated by the DER Owner connects to equipment owned and operated by the Distribution Provider. Design and installation of equipment on either side of the POCEO is the responsibility of the owner of the equipment.

The bi-directional meter has two registers. One register captures energy flow from the Distribution Provider's electric system to the DER generation facility ("Facility") (i.e., delivered energy). The other register measures energy flow from the Facility to the utility (received energy). If the power purchase agreement ("PPA") executed between the DER Owner and the Distribution Provider stipulates that the Distribution Provider will purchase the received energy at an hourly avoided energy rate, then the Distribution Provider will install an advanced meter with capability of capturing 30-minute interval real power (kW), reactive power (kVA) and real energy (kWh). The 30-minute interval readings recorded by the meter for the previous day are captured by the Distribution Provider's Meter Data Management System (MDMS) daily. The MDMS validates the data and transmits the validated data to various departments that need this data for billing and balancing generation and load. For Facilities whose PPA only requires that the received energy be purchased at a fixed rate, a simple energy meter is installed. Accumulated energy readings are typically transmitted several times daily over the Distribution Provider's advanced metering infrastructure (AMI) network for billing purpose only.

The visible air-gap switch is required for isolating the Facility from the Distribution Provider Electric System when work on a line section or equipment is performed by the Distribution Provider line crews. The switch is generally required to provide a visibly, verifiable break (or air gap) between the Facility and the Distribution Provider electric system.

The bi-directional-meter and visible air-gap switch are minimum interconnection requirements of the Distribution Provider. Other requirements include intertie protection that is designed to quickly isolate the DER generation facility ("Facility") for faults within the Distribution Provider electric system. The intertie protection may include a communication link between the Facility and the Distribution Provider electric system to prevent unintentional islanding.

For inverter-based Facilities that are UL listed, meet the utility compatibility requirements of UL Standard 1741 and protection requirements of IEEE Standard 1547-2003 (Reaffirmed 2008), and are determined to be capable of detecting Distribution Provider faults on the Distribution Provider side of the Facility intertie (or step-up) transformer ("GSU"), a separate intertie protection is generally not required. However, the Distribution Provider generally performs commissioning testing of the Facility to ensure that the IEEE 1547 protection that comes

integral with the inverter is properly set and configured for parallel operation with the Distribution Provider electric system. The commissioning testing is performed after the Facility Owner provides proof (typically in the form of an electrical inspection certificate) that the Facility has been inspected by the Authority Having Jurisdiction or by a licensed electrician or registered professional engineer, if there is no inspecting authority for the Facility location.

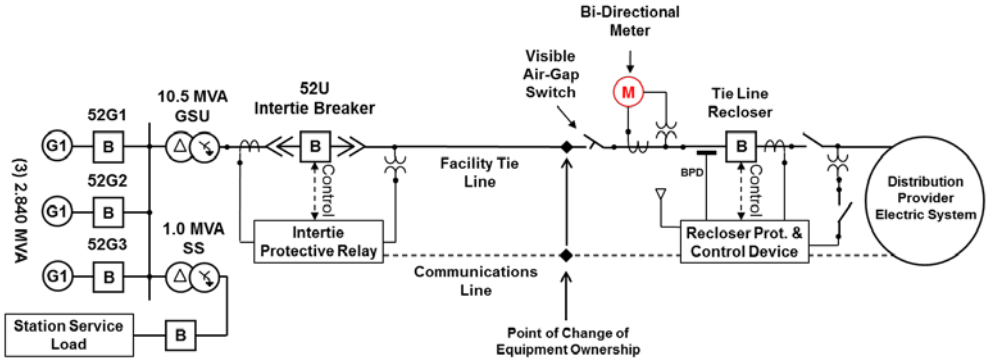

Figure xxx - Interconnection of a large **Landfill Gas Generation Facility**. System impact studies performed by the Distribution Provider identified the need for a communications line for direct transfer trip of the Facility. Due to length of the Facility Tie Line, a tie line recloser is required to maintain reliability of service to existing end-use customers served by the Distribution Provider Electric System.

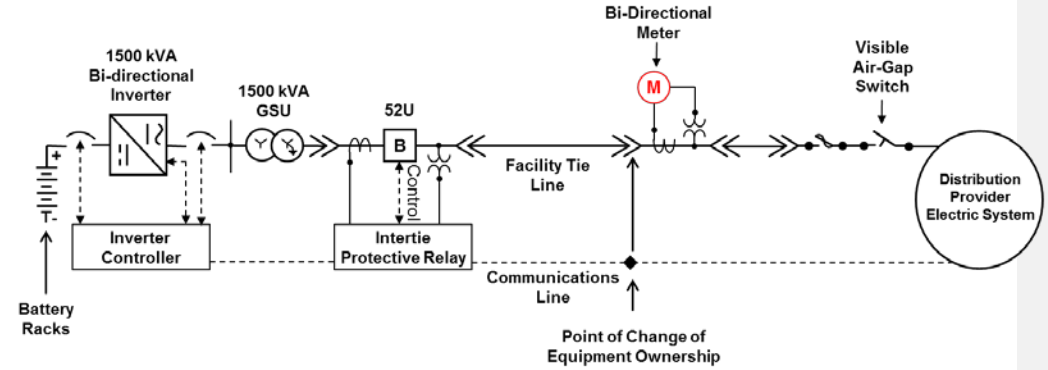

Figure xxx - Interconnection of a **large battery energy storage** Facility. The inverter is not UL listed. Therefore, a separate intertie breaker with relays is required. System impact studies performed by the Distribution Provider identified the need for a communications line for direct transfer trip of the Facility.

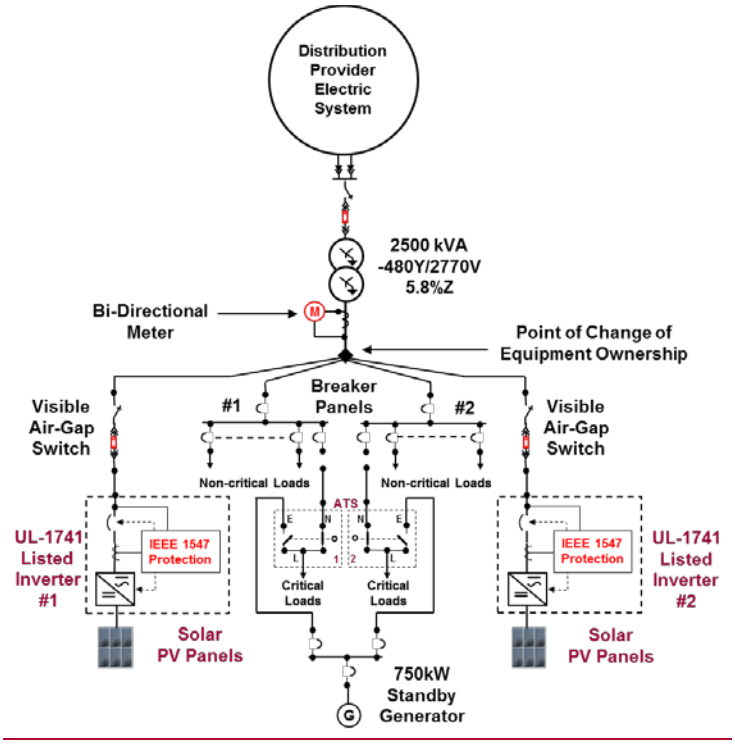

Figure xxx - Interconnection of a **behind-the-meter solar PV** Facility at a large commercial customer site with an existing standby generator.

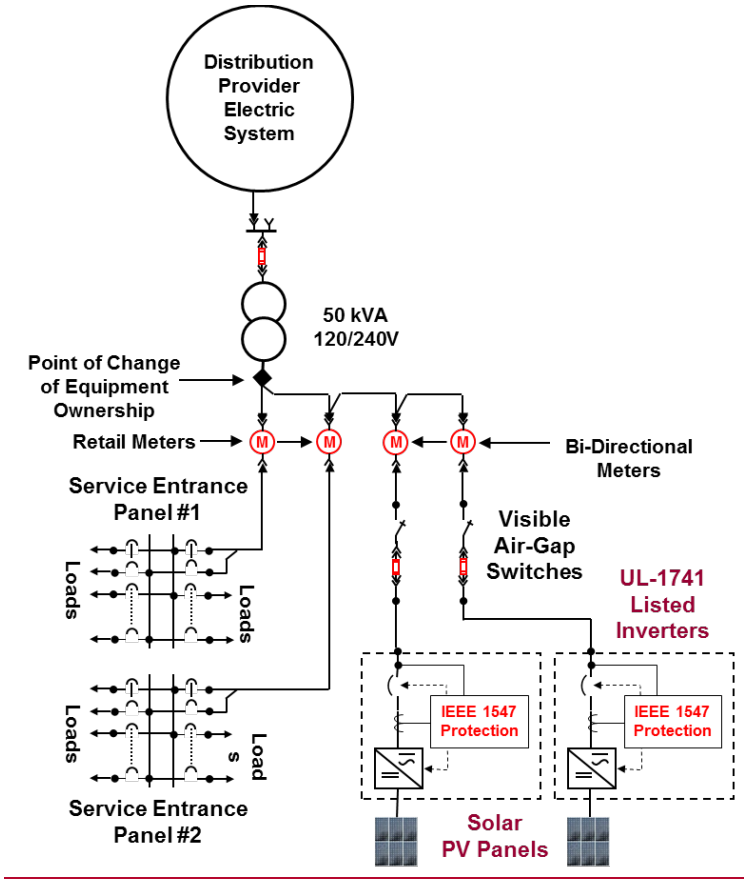

Figure xxx - Interconnection of a **solar PV merchant** Facility at a residential customer site. Facility output is sold to the Distribution Provider through the bi-directional meter. Distribution Provider provides electric service to the customer's residence through two retail revenue meters and two service entrance breaker panel boards.

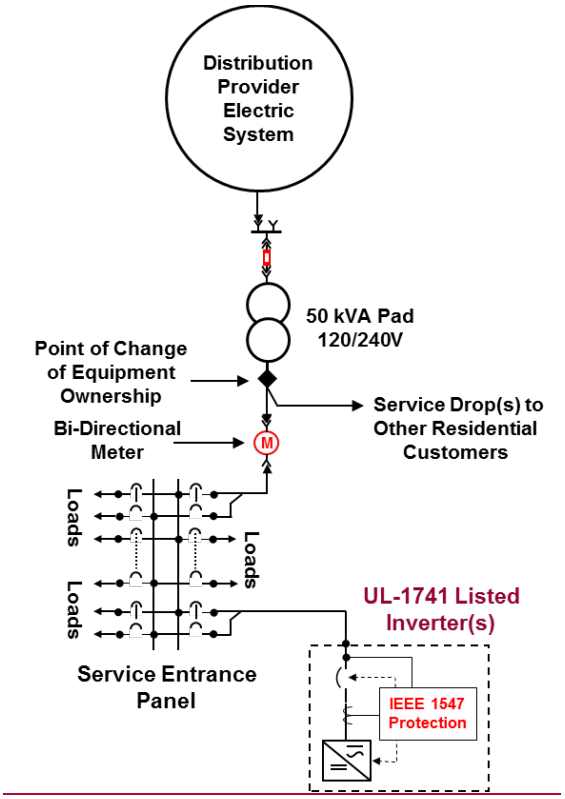

Figure xxx - Interconnection of a **behind-the-meter solar PV merchant** Facility at a residential customer site.

~~Typical DER Interconnections Distribution Feeders~~

~~Landfill Gas QF Interconnection~~

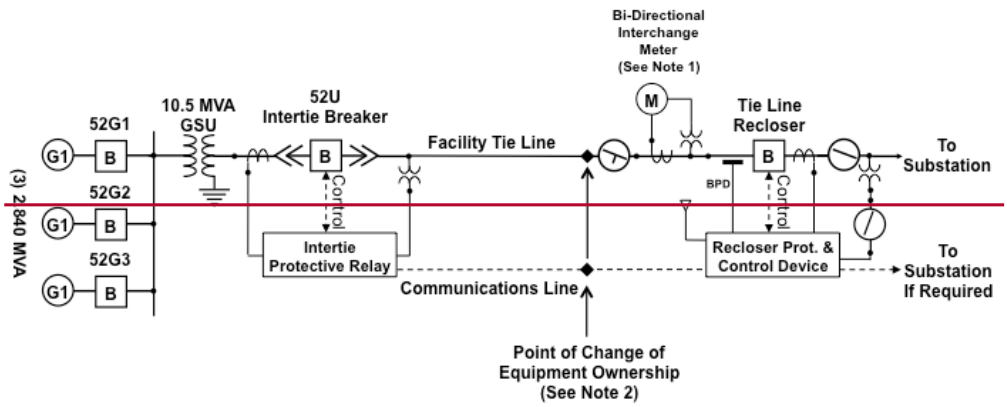

~~Note:~~

1. ~~The bi-directional interchange meter has two registers. One register captures energy flow from utility to the Facility (i.e. delivered). The other register measures energy flow from the Facility to the utility (i.e. received). If the power purchase agreement for the Facility stipulates the Facility will be compensated at an hourly avoided energy rate for the received energy, then an advanced meter with capability of capturing 30-minute interval kW, kVAr, kWh data is installed. The 30-minute interval readings recorded by the meter for the previous day are captured by the utility Meter Data Management System (MDMS) daily. The MDMS validates the data and transmits the validated data to the Billing Group and other users of the data including the Balancing Authority at the Power Coordination Center. For Facilities whose PPA only requires that they be compensated for their received energy at a fixed rate, a simple kWh meter is installed. kWh readings recorded by the meter are transmitted over the AMI network to the Billing Group only.~~
2. ~~The Customer is responsible for designing and installing equipment of the Customer side of the point of change of equipment ownership in accordance with the National Electrical Code, the National Electrical Safety Code, other national codes, and any local code pertaining to electrical facility design, construction, or safety. The Utility will energize the tie line after the Customer has provided proof (typically in the form of an electrical inspection certificate) that its interconnection facilities have been inspected either by the Authority Having Jurisdiction or by a licensed electrician or registered professional engineer, if there is no inspecting authority, and after the Utility verifies adherence of the Facility installation to the Interconnection Agreement and verifies proper configuration of the Facility interconnection protection and control devices and schemes.~~

Formatted: Numbered + Level: 1 + Numbering Style: 1, 2, 3, … + Start at: 1 + Alignment: Left + Aligned at: 0.25" + Tab after: 0.5" + Indent at: 0.5"

~~Large Battery Energy Storage Interconnection~~

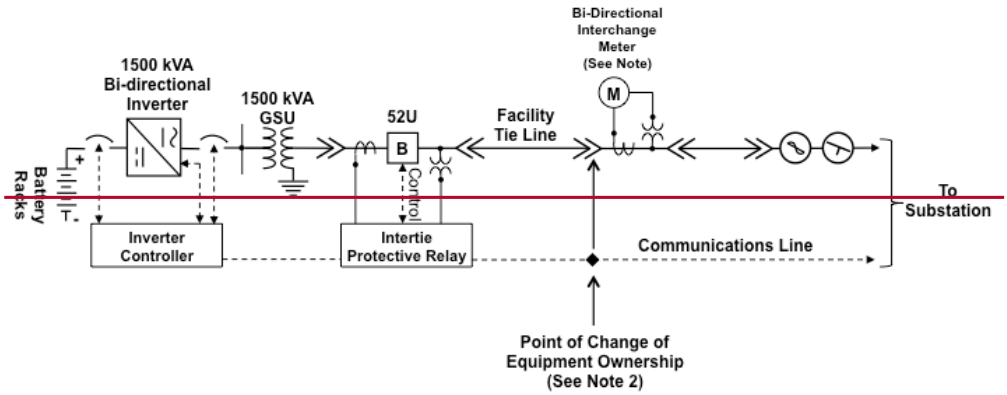

~~Note:~~

1. ~~The bi-directional interchange meter has two registers. One register captures energy flow from utility to the Facility (i.e. delivered). The other register measures energy flow from the Facility to the utility (i.e. received). If the power purchase agreement for the Facility stipulates the Facility will be compensated at an hourly avoided energy rate for the received energy, then an advanced meter with capability of capturing 30-minute interval kW, kVAr, kWh data is installed. The 30-minute interval readings recorded by the meter for the previous day are captured by the utility Meter Data Management System (MDMS) daily. The MDMS validates the data and transmits the validated data to the Billing Group and other users of the data including the Balancing Authority at the Power Coordination Center. For Facilities whose PPA only requires that they be compensated for their received energy at a fixed rate, a simple kWh meter is installed. kWh readings recorded by the meter are transmitted over the AMI network to the Billing Group only.~~
2. ~~The Customer is responsible for designing and installing equipment of the Customer side of the point of change of equipment ownership in accordance with the National Electrical Code, the National Electrical Safety Code, other national codes, and any local code pertaining to electrical facility design, construction, or safety. The Utility will energize the tie line after the Customer has provided proof (typically in the form of an electrical inspection certificate) that its interconnection facilities have been inspected either by the Authority Having Jurisdiction or by a licensed electrician or registered professional engineer, if there is no inspecting authority, and after the Utility verifies adherence of the Facility installation to the Interconnection Agreement and verifies proper configuration of the Facility interconnection protection and control devices and schemes.~~

Formatted: Numbered + Level: 1 + Numbering Style: 1, 2, 3, … + Start at: 1 + Alignment: Left + Aligned at: 0.25" + Tab after: 0.5" + Indent at: 0.5"

~~Commercial Behind-the-Meter Solar PV Interconnection~~

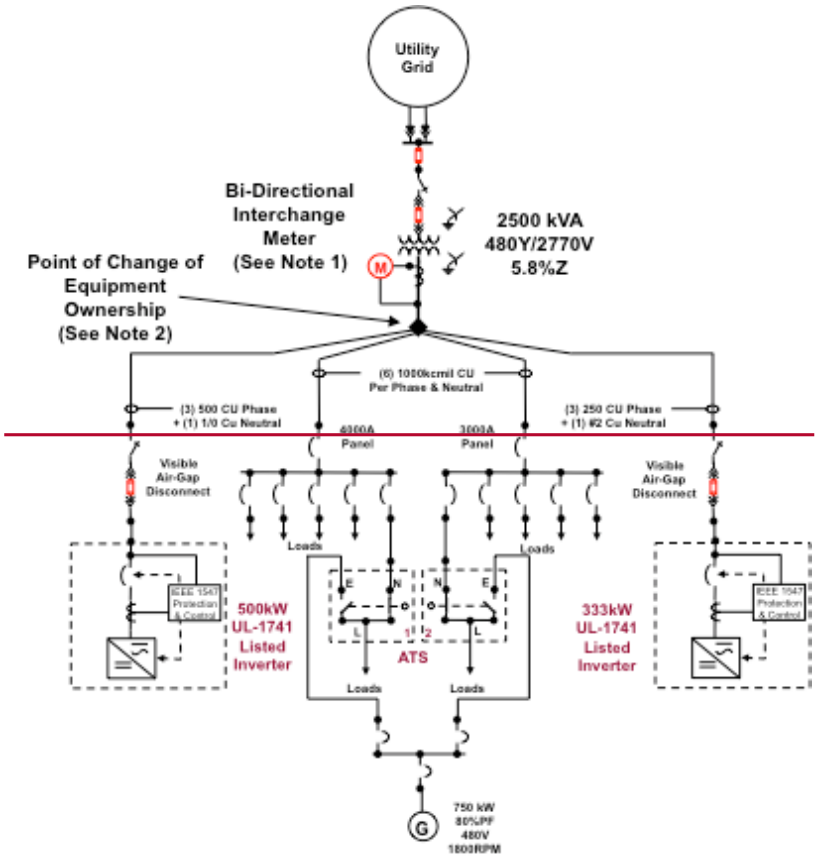

~~Note:~~

1. ~~The bi-directional interchange meter has two registers. One register captures energy flow from utility to the Facility (i.e. delivered). The other register measures energy flow from the Facility to the utility (i.e. received). If the power purchase agreement for the Facility stipulates the Facility will be compensated at an hourly avoided energy rate for the received energy, then an advanced meter with capability of capturing 30-minute interval kW, kVAr, kWh data is installed. The 30-minute interval readings recorded by the meter for the previous day are captured by the utility Meter Data Management System (MDMS) daily. The MDMS validates the data and transmits the validated data to the Billing Group and other users of the data including the Balancing Authority at the Power Coordination Center. For Facilities whose PPA only requires that they be compensated for their received energy at a fixed rate, a simple kWh meter is installed. kWh readings recorded by the meter are transmitted over the AMI network to the Billing Group only.~~
2. ~~The Customer is responsible for designing and installing equipment of the Customer side of the point of change of equipment ownership in accordance with the National Electrical Code, the National Electrical Safety Code, other national codes, and any local code pertaining to electrical facility design,~~

Formatted: Numbered + Level: 1 + Numbering Style: 1, 2, 3, … + Start at: 1 + Alignment: Left + Aligned at: 0.25" + Tab after: 0.5" + Indent at: 0.5"

~~construction, or safety. The Utility will energize the Facility after the Customer has provided proof (typically in the form of an electrical inspection certificate) that its Facility has been inspected either by the Authority Having Jurisdiction or by a licensed electrician or registered professional engineer, if there is no inspecting authority, and after the Utility verifies adherence of the Facility installation to the Interconnection Agreement. For Facilities with inverter based generation, the Utility will also verify proper configuration of the inverter-based generator self-contained protection and control schemes.~~

~~Residential Solar PV QF Interconnection~~

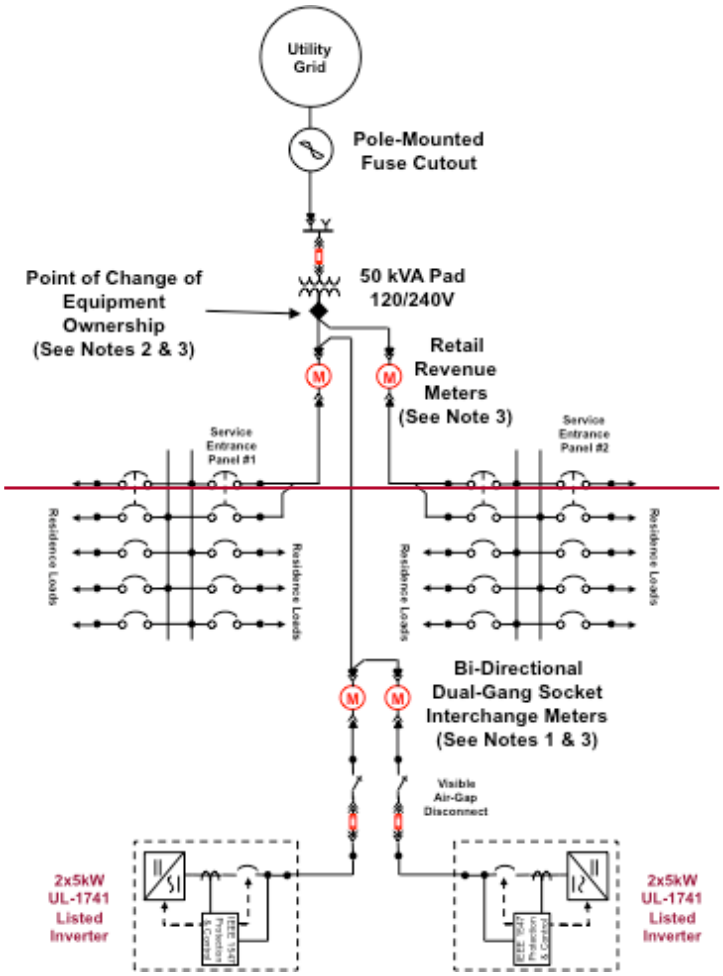

~~Note~~:

1. ~~The bi-directional interchange meter has two registers. One register captures energy flow from Utility to the Facility (i.e. delivered). The other register measures energy flow from the Facility to the utility (i.e.~~

Formatted: Numbered + Level: 1 + Numbering Style: 1, 2, 3, … + Start at: 1 + Alignment: Left + Aligned at: 0.25" + Tab after: 0.5" + Indent at: 0.5"

~~received). If the power purchase agreement for the Facility stipulates the Facility will be compensated at an hourly avoided energy rate for the received energy, then an advanced meter with capability of capturing 30-minute interval kW, kVAr, kWh data is installed. The 30-minute interval readings recorded by the meter for the previous day are captured by the utility Meter Data Management System (MDMS) daily. The MDMS validates the data and transmits the validated data to the Billing Group and other users of the data including the Balancing Authority at the Power Coordination Center. For Facilities whose PPA only requires that they be compensated for their received energy at a fixed rate, a simple kWh meter is installed. kWh readings recorded by the meter are transmitted over the AMI network to the Billing Group only.~~

~~2. The Customer is responsible for designing and installing equipment of the Customer side of the point of change of equipment ownership in accordance with the National Electrical Code, the National Electrical Safety Code, other national codes, and any local code pertaining to electrical facility design, construction, or safety. The Utility will energize the Facility after the Customer has provided proof (typically in the form of an electrical inspection certificate) that its Facility has been inspected either by the Authority Having Jurisdiction or by a licensed electrician or registered professional engineer, if there is no inspecting authority, and after the Utility verifies adherence of the Facility installation to the Interconnection Agreement. For Facilities with inverter-based generation, the Utility will also verify proper configuration of the inverter-based generator self-contained protection and control schemes.~~

~~3. The Customer owns the meter socket and the conductors between the meter socket(s) and the service transformers. The Utility owns the meter.~~

~~Residential BTM Solar PV QF Interconnection~~

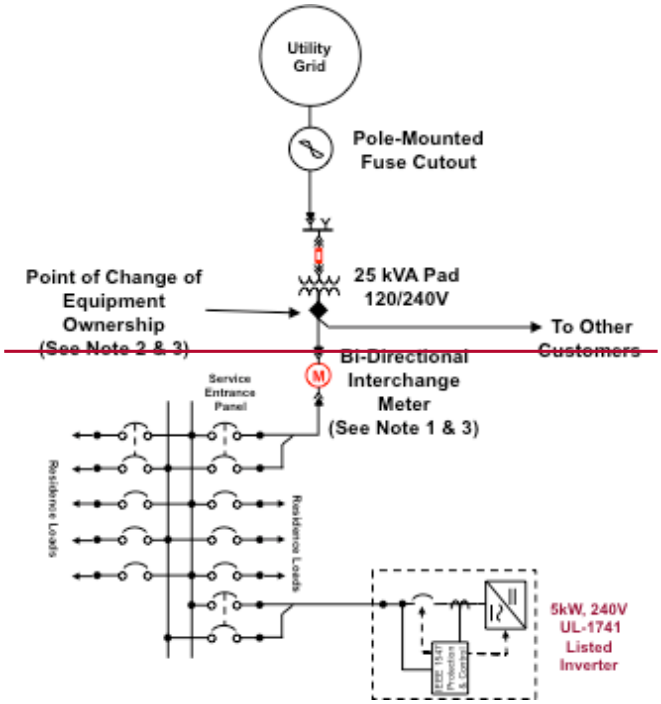

~~Note:~~

1. ~~The bi-directional interchange meter has two registers. One register captures energy flow from Utility to the Facility (i.e. delivered). The other register measures energy flow from the Facility to the utility (i.e. received). If the power purchase agreement for the Facility stipulates the Facility will be compensated at an hourly avoided energy rate for the received energy, then an advanced meter with capability of capturing 30-minute interval kW, kVAr, kWh data is installed. The 30-minute interval readings recorded by the meter for the previous day are captured by the utility Meter Data Management System (MDMS) daily. The MDMS validates the data and transmits the validated data to the Billing Group and other users of the data including the Balancing Authority at the Power Coordination Center. For Facilities whose PPA only requires that they be compensated for their received energy at a fixed rate, a simple kWh meter is installed. kWh readings recorded by the meter are transmitted over the AMI network to the Billing Group only.~~

1. ~~The Customer is responsible for designing and installing equipment of the Customer side of the point of change of equipment ownership in accordance with the National Electrical Code, the National Electrical Safety Code, other national codes, and any local code pertaining to electrical facility design, construction, or safety. The Utility will energize the Facility after the Customer has provided proof (typically in the form of an electrical inspection certificate) that its Facility has been inspected either by the Authority Having Jurisdiction or by a licensed electrician or registered professional engineer, if there is no inspecting authority, and after the Utility verifies adherence of the Facility installation to the Interconnection Agreement. For Facilities with inverter-based generation, the Utility will also verify proper configuration of the inverter-based generator self-contained protection and control schemes.~~

2. ~~The Customer owns the meter socket and the conductors between the meter socket(s) and the service transformers. The Utility owns the meter.~~

Formatted: Numbered + Level: 1 + Numbering Style: 1, 2, 3, … + Start at: 1 + Alignment: Left + Aligned at: 0.25" + Tab after: 0.5" + Indent at: 0.5"

IEEE P1547 Pending Changes

Additional information copied & pasted from IEEE P1547/Draft 3 with changes approved by the P1547 Working Group members at a meeting on March 8-9, 2016, in Juno Beach, FL [1]:

4.2.3.1 Applicable Voltages

The voltages applicable to the requirements of this clause shall be the voltages at the Point of Common Coupling (PCC) for all Local EPS

~~1.~~a) having an aggregate DER rating of 500 kW or greater, and

~~2.~~b) having an average load demand of equal or less than 10% of the DER rating.

In all other situations, the applicable point for meeting performance requirements shall be the Point of DER connection.

For DER with a PCC located at the medium-voltage level, the Applicable Voltages shall be determined by the nature of the Area EPS at the PCC. For DER with a PCC located at the low-voltage level, the Applicable Voltages shall be determined by the nature of the low-voltage winding configuration of the Area EPS transformer(s) between the medium-voltage system and the low-voltage system. The

Formatted: Indent: Left: 0.75", Numbered + Level: 1 + Numbering Style: a, b, c, … + Start at: 1 + Alignment: Left + Aligned at: 0.25" + Indent at: 0.5"

Applicable Voltages which shall be detected are shown in Tables 1.1 and 1.2. For multi-phase systems, all phases shall be included.

Table 1.1 – Applicable Voltages when PCC is located at medium voltage.

Area EPS at PCC	***Applicable Voltages***
Three-Phase, Four-Wire	*Phase to phase and phase to neutral*
Three-Phase, Three-Wire, Grounded	*Phase to phase and phase to ground*
Three-Phase, Three-Wire, Ungrounded	*Phase to phase*
Single-Phase, Two-Wire	*Phase to 2nd wire (the 2nd wire may be either a neutral or a 2nd phase)*

Table 1.2 – Applicable Voltages when PCC is located at low voltage.

Low-Voltage Winding Configuration of Area EPS Transformer(s) [1]	***Applicable Voltages***
Grounded Wye, Tee or Zig-Zag	*Phase to phase and phase to neutral*
Ungrounded Wye, Tee or Zig-Zag	*Phase to phase or phase to neutral*
Delta[2]	*Phase to phase*
Single-Phase 120/240 V (split-phase or Edison connection)	*Line to neutral – for 120 V DER units* *Line to line – for 240 V DER units*

[1] A three-phase transformer or a bank of single-phase transformers may be used for three-phase systems.
[2] Including delta with mid tap connection (grounded or ungrounded).

[…]

References

[1] *Draft Standard for Interconnection and Interoperability of Distributed Energy Resources with Associated Electric Power Systems*, IEEE P1547/D3. IEEE Standards Coordinating Committee 21, 2016.

Chapter 3 - How are Distributed Energy Resources Modeled?

How are Distributed Energy Resources modeled? – *Jens Boemer, Gary Keenan, Barry Mather, Quoc Le, Dariush Shirmohammadi*

a. Distribution load is netted at source bus on present models
b. Is it being modeled discretely anywhere?
c. When does it become significant?
d. NERC Load Modeling Task Force
e. EPRI and WECC Guideline (PVD1 model)
f. Recommendations for minimum data requirements of DER

DER modeling

The increasing amount of Distributed Energy Resources (DER) connected to the distribution system requires consideration of these resources in bulk power system planning studies. The scope of this chapter on DER modeling covers (a) steady-state power flow and short-circuit studies and (b) dynamic disturbance ride-through and transient stability studies for bulk system planning. Distribution system aspects, bulk system small-signal stability, and bulk system operational aspects such as flexibility and ramping are out of the scope.

While it may be desirable to model DER in all planning studies and in full detail, the additional effort of doing so may only be justified if DER are expected to have significant impact on the modeling results. An assessment of the expected impact will have to be scenario-based and the time horizon of interest may vary between study types. For long-term planning studies, expected DER deployment levels looking 5-10 years ahead may reasonably be considered. Whether DER is modeled in bulk system studies or not, it is strongly recommended that minimum data collection of DER interconnections be established in order to adequately assess future DER deployments.

Modeling modern bulk systems with a detailed representation of a large number of DERs and distribution feeders can increase the complexity, dimension and handling of the system models beyond practical limits in terms of computational time, operability, and data availability. Therefore, a certain degree of simplification may be needed, either by model aggregation (i.e., clustering of models with similar performance), by derivation of equivalent models (i.e., reduced-order representation), or by a combination of the two. Netting of DERs with loads at substation level is not recommended for high DER penetration scenarios because it can misrepresent the models needed to determine potential aggregate impacts of DER on bulk system power flows and dynamic performance.

A *modular approach* to represent DERs in bulk system studies as illustrated in Figure 1 is recommended to ensure accurate representation of the resources for the specific bulk system study type. The hierarchy of the clustering of DER for model aggregation could consider:

- Differentiation of DERs per resource type in order to derive meaningful dispatch scenarios rather than worst-case dispatches for bulk system planning studies.
- Differentiation of DERs per interconnection requirements performance in order to represent the fundamentally different steady-state and dynamic behavior among the legacy DERs.
- Differentiation of DERs per technology-type, e.g., inverter-coupled versus directly-coupled synchronous generator DER, in order to accurately represent the technology-specific dynamic behavior.

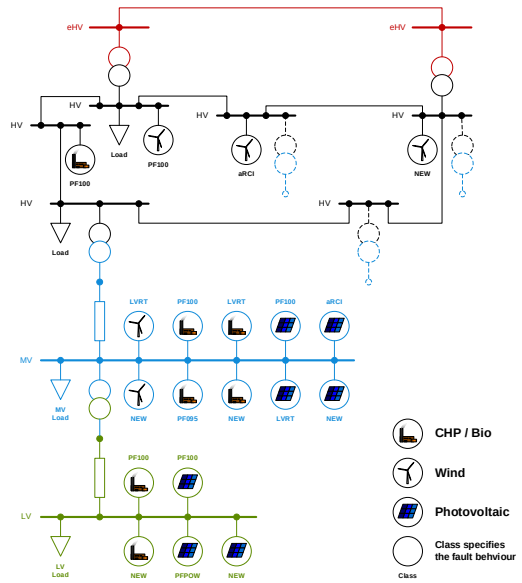

Figure 1: Modular representation of Distributed Energy Resources in bulk system steady-state and dynamic studies. [1; 2]

Defining the appropriate balance between model accuracy and simplicity of steady-state and dynamic equivalent models for DER is a major objective of ongoing research efforts.

Certain guidelines for DER modeling have been published. The following includes a synopsis of the industry guidelines issued by the Western Electricity Coordinating Council (WECC). Aggregated and/or equivalent modeling of DER is discussed for four types of bulk power system planning studies:

1. Steady-state power flow studies
2. Steady-state short-circuit studies
3. Dynamic disturbance ride-through studies
4. Dynamic transient stability studies

Data requirements that result from the modeling approaches and recommendations on sharing of information across the Transmission & Distribution (T&D) interface are summarized at the end of the chapter.

The limited existing knowledge and experience on modeling DERs in bulk system planning studies require future collaborative research, knowledge exchange, and learning.

Steady-state studies

Steady-state studies aim at:

~~1.~~a. power flow calculation to determine bulk system real and reactive power flows for network expansion planning, voltage stability studies and coordination of voltage controls at the Transmission & Distribution (T&D) interface, and

Formatted: Numbered + Level: 1 + Numbering Style: 1, 2, 3, … + Start at: 1 + Alignment: Left + Aligned at: 0.25" + Indent at: 0.5", Tab stops: Not at 0.5"

Formatted: Numbered + Level: 1 + Numbering Style: a, b, c, … + Start at: 1 + Alignment: Left + Aligned at: 0.25" + Indent at: 0.5", Tab stops: Not at 0.5"

~~2.~~b. short-circuit calculation to determine short-circuit power levels for equipment rating and voltage sag propagation analysis.

Modeling of DERs in these studies would consider the real power injection at distribution system level and the reactive power that may be supported or required by DERs. A power flow case is also needed to initialize the state variables of a dynamic bulk system model for a dynamic stability study.

Steady-state DER models

Appropriate DER models are required and may differ between the steady-state study types. Steady-state power flow calculations may only require a standard generator or simplistic Norton or Thevenin equivalent with voltage control loops appropriate for steady-state analysis under normal conditions of voltage and frequency.

Steady-state short-circuit studies require appropriate DER models that would adequately represent the short-circuit contribution from DERs. Inverter-based DERs are current and power limited sources. A current-limited Norton equivalent with control loops that adequately model the response under abnormal conditions of voltage is required. The short-circuit contribution of DERs depends significantly on the performance specified by interconnection requirements, such as trip and ride-through requirements. Traditional steady-state short-circuit analysis algorithms are not suitable for inverter-based DERs. New algorithms that iteratively calculate the current-limited short-circuit contributions from inverter-based DERs may be needed.

Aggregated Modeling and Netting of DERs with Load

In bulk system planning studies the distribution system load is typically aggregated at the transmission buses and netted with load (load is reduced by DER generation at a specific substation). In those study cases and grid regions where DER levels are expected to significantly impact power flows between the bulk and distribution system that they may conflict with NERC system performance criteria, e.g., NERC TPL-001-4 [3], DER should not be netted with load but modeled in an aggregated and/or equivalent way. Exceptions for permissive netting of DER (not explicitly modeling DER but reducing load by DER generation based on explicitly available DER data) may be acceptable in steady-state studies for those DER that inject real power at unity power factor.

Depending on the study region, the aggregate DER penetration at substation level, regional level, or interconnection-wide level may give indication towards the expected impact of DER on the system performance; the decision to aggregate DERs, however, must always be system-dependent. This assessment should be irrespective of whether it is behind-the-meter DER or before-the-meter (utility-scale) DER.

While netting of DERs with loads at substation level should be discontinued in future, existing guidelines do not require modeling of all DERs in order to limit the complexity of the system model and data requirements. For example, the WECC manual and data [4; 5] only require

~~1.~~a. modeling of any single DER with a capacity of greater than or equal to 10 MVA explicitly, and

~~2.~~b. modeling of multiple DERs at any load bus where their aggregated capacity at the 66/69 kV substation level is greater than or equal to 20 MVA with a single-unit behind a single equivalent (distribution) impedance model as shown in Figure 2 based on WECC's "PV Power Plant Dynamic Modeling Guide" [6].

Formatted: Numbered + Level: 1 + Numbering Style: a, b, c, … + Start at: 1 + Alignment: Left + Aligned at: 0.25" + Indent at: 0.5", Tab stops: Not at 0.5"

The threshold above which DERs are not netted with loads is system-specific and may depend on the study type, DER penetration level, and load composition. In the regional case of WECC, a maximum amount of 5 % netted generation of area total generation is recommended [4]. In the future, netting of DERs with loads should be avoided.

Minimum data collection for DER modeling should be established to enable adequate assessment of future DER deployments. Related data requirements are outlined in WECC's "Steady State and Dynamic Data Requirements MOD-(11 and 13)-WECC-CRT-1 Regional Criterion" [5].

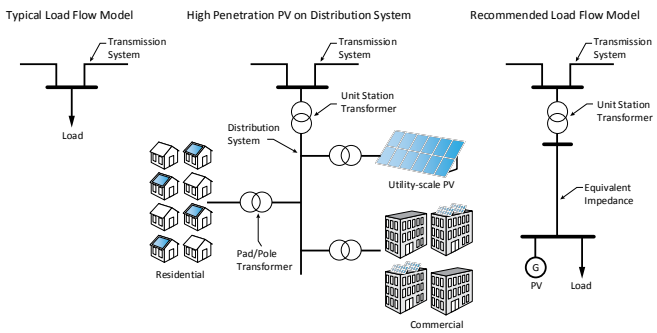

Figure 2
WECC recommended power flow representation for study of high-penetration PV scenarios. Source: EPRI figure based on [6].

More Detailed Representation in Special Cases

As stated earlier, the objective of modeling of DERs for power flow studies is to capture the effect of reactive power support as well as the voltage tolerance characteristics of DERs in steady-state and dynamic simulations, particularly voltage stability. Aggregation of various DERs behind a *single* equivalent distribution impedance may be insufficient for steady-state studies in special cases. The following special conditions may require detailed representation of the distribution system, either through considering the *multiple* equivalent impedances of High Voltage to sub-transmission lines as well as Medium Voltage to primary and Low Voltage to secondary feeders separately [2] or through equivalent voltage control blocks in the equivalent DER generator model:

1. High penetrations of modern DER that inject real power at power factors substantially different from unity.
2. High DER penetration levels (e.g. above approximately 50%) of instantaneous interconnection-wide load, i.e. kW or MW or GW loads).
3. A significant amount of reverse power flows from distribution to bulk system level.
4. Substantial amounts of DER connected at different voltage levels in a region.

Formatted: Numbered + Level: 1 + Numbering Style: 1, 2, 3, … + Start at: 1 + Alignment: Left + Aligned at: 0.25" + Indent at: 0.5", Tab stops: Not at 0.5"

Depending on the particular characteristics of the distribution systems and their level of uniformity in the study case, regionally-specific equivalent impedances and equivalent voltage control blocks in the equivalent DER generator model may be used (e.g., for urban, sub-urban and rural feeders) to accurately model the voltage at the equivalent DER model terminals.

In grid regions where DER performance requirements are *changing*, i.e., have been changed or are expected to change substantially in the future, *multiple* equivalent generators may be used for each DER generation in order to appropriately reflect the DER performance. Existing DER units (i.e. legacy DERs) are typically not upgraded to meet the latest performance requirements.

Dynamic studies

Dynamic simulation studies aim at:

~~1.~~a. disturbance ride-through analysis to determine bulk system frequency and voltage stability following normally-cleared or delayed-cleared transmission faults with considering the amount of DER power that may be tripped off-line during the disturbance due to under-voltage, over-voltage, under-frequency, and/or over-frequency protection, and

~~2.~~b. transient stability analysis to determine bulk system transient stability during and following normally-cleared or delayed-cleared transmission faults with considering a fast reactive support from DER that may improve transient stability of directly-connected synchronous generation.

Formatted: Numbered + Level: 1 + Numbering Style: a, b, c, … + Start at: 1 + Alignment: Left + Aligned at: 0.25" + Indent at: 0.5"

Modeling of DERs in dynamic bulk system studies requires a solid understanding of DER performance mandated in interconnection requirements (see chapter 4) as well as technology-specific DER performance and control systems.

Interconnection Requirements

Interconnection requirements (also known as performance requirements) are differentiated by individual DER's rated capacity in North America and by DER's connection voltage level in Europe. Interconnection requirements are evolving with increasing DERs penetration and as a consequence of this, a number of DER classes with very different dynamic behavior exist in the power system. For power system stability studies, interconnection requirements determine a *performance framework* for the network fault response of individual DERs depending on their commissioning period, connection level or size, and sometimes technology type.

With regard to disturbance ride-through requirements, the 'get-out-of-the-way' principle as it has been mandated in IEEE Std. 1547-2003 [7], FERC's SGIP/SGIA [8; 9], and the former CA Rule 21 [10] for North America and California in particular, have been or are currently being revised for voltage and frequency ride-through [11–13]. Additional dynamic performance requirements for DER, such as 'dynamic voltage support' during and/or following network faults, may evolve in the future similar to the requirements for an additional reactive current injection during faults as in [14] for Germany.

Dynamic DER models

With respect to bulk system connected wind and PV generation (i.e. wind and PV power plants of typically 10 MW or larger) the following state-of-the-art generic dynamic models exist:

- Wind: The WECC generic wind turbine generator model (primarily for use with bulk power system connected WTG, and could be used for DER where detailed distribution models are developed) are documented in [15]. The IEC models are documented in IEC Standard 61400-27-1 [16]. It is noteworthy that differences do to exist between the generic wind turbine generator models specified in the IEC standard and the modeling WECC guidelines. The IEC models include a more detailed representation of the dynamic performance of wind turbine generators during the fault period than the WECC models [17–19] and, therefore, seem to be more suitable for transient stability studies.
- Photovoltaic (PV): The first generation of generic models for PV plants, developed by the WECC Renewable Energy Modeling Task Force (REMTF), has been approved under the WECC Modeling and Validation Working Group [6; 20; 21]. These models can potentially be used for modeling DERs, where explicit detailed modeling of DER is warranted. For the purposes of bulk system studies, much of the distribution system and the DERs are represented as aggregated models. WECC has initiated and

developed some aggregated, and simplified, DER models for representing devices such as distributed PV [6]; however, discussions continue within the WECC REMTF to improve these models. Currently, there is no IEC standard on PV modeling.

- Synchronous generator DER: Modeling of large-scale directly-coupled synchronous generator (SG) and their excitation systems in power system stability studies is well established and widely accepted recommendations exist [22; 23]. Modeling of medium to small-scale, low-inertia, distributed combined heat and power (CHP) plants is a less investigated field, although some older publications exist [24–26]. A relevant publication from recent years, [27], models the network fault response of a medium-scale diesel-driven synchronous generator.

Aggregated Modeling and Dynamic Equivalencing

Modeling of Distributed Energy Resources in dynamic bulk system planning studies may require a certain degree of simplification in order to limit the data and computational requirements as well as the general handling of the bulk system model. Model reduction could either be achieved by model aggregation (i.e., clustering of models with similar performance), by derivation of equivalent models (i.e., reduced-order representation), or by a combination of the two. However, equivalent models for DERs should have sufficient fidelity to accurately consider the two main challenges of

~~1.~~a. spreading model parameters of the controllers of the various DERs in a distribution feeder, and

~~2.~~b. variance of the terminal voltages of DERs connected at different locations of a distribution feeder.

Formatted: Numbered + Level: 1 + Numbering Style: a, b, c, … + Start at: 1 + Alignment: Left + Aligned at: 0.25" + Indent at: 0.5", Tab stops: Not at 0.5"

With regard to consideration of spreading model parameters, it is recommended that modeling distinguishes at least the DER performance mandated by interconnection requirements. This could either be achieved by using separate classes of DER models with each representing the amount of DERs that went into operation when a certain requirements were in place, or by equivalent modeling of a mixed population of 'legacy' and 'modern' DERs with a 'partial tripping' design parameter as it has been considered in WECC's distributed PV (*PVD1)* model [6]. Consideration should also be given to regional underfrequency load-shedding (UFLS) and undervoltage load shedding (UVLS) programs that may trip distribution feeders at substation level and thereby supersede DER ride-through or trip settings.

Consideration for the variance of the terminal voltages of DERs connected at different locations of a distribution feeder will be important to accurately model the dynamic response of DER in the periphery region (annulus) of a voltage sag as illustrated in **Error! Reference source not found.**3 [28]. This is the area where the modeling accuracy of DERs may have a large impact on the modeling results in very high DER penetration studies, because [28]:

- The annulus of the voltage sag can have a very large geographic extension.
- The number of DER units in this part of the system can become a significant part of the total number of DER units that will obviously trip because they may be located near the fault.
- Depending on the real and reactive power injection of DERs during fault ride-through operation based on the interconnection requirements, DERs can significantly influence the distribution system voltage and therefore the tripping behavior of 'legacy' DERs.

As illustrated in **Error! Reference source not found.**3, the post-fault real power imbalance due to undervoltage tripping of DERs will be larger in the case shown in diagram (a) than in the case shown in diagram (b). Hence, the accurate modelling of the voltage contour that delineates all system nodes in the annulus of a voltage sag at

transmission system level where the retained voltage is smaller than the DER's undervoltage protection threshold is important to accurately determine how much DER generation may trip during a disturbance.

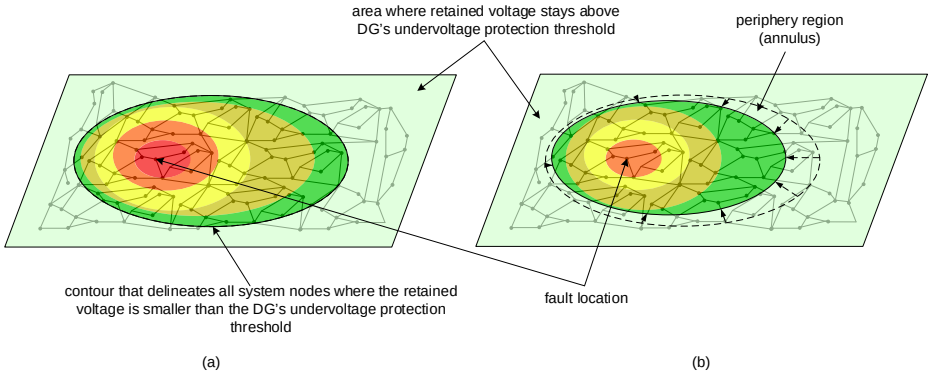

Figure 3: Illustration of the area where modeling accuracy of Distributed Energy Resources is critical. [2]

Additional model complexity that is unlikely to increase system-wide modeling accuracy should be avoided.

Until a few years ago, very little research has been published on dynamic equivalencing of stability models of active distribution systems (ADSs) that comprise significant amounts of DERs [29]. Publication [30] summarizes the state of the art for the application of dynamic equivalencing methods to derive aggregated models of ADSs. Recently, a consensus is evolving that *grey box modeling* is recommended for equivalent modeling of ADSs when sufficient physical knowledge is available. The computational challenges are reduced and these composite models can be easily integrated in dynamic simulation tools.

Notable former publications include NREL's *analytical method* of equivalencing the collector system of large wind power plants for steady-state studies [31], a generic dynamic model of an active distribution system for bulk system stability studies [32; 33], and WECC's dynamic *reduced-order stability model* of DERs in distribution systems considering partial loss of DER in-feed described below [6; 34].

NREL's analytical method for steady-state studies, however, does not seem to be able to accurately consider influence of distribution grid loads, the general voltage diversity present on a distribution grid and the active dynamic behavior of modern DERs with low-voltage ride-through (LVRT) and fast dynamic reactive support (DRS). WECC's simplified distributed PV model (*PVD1* [6; 35]) is currently not widely applied and may require further refinement. That said, WECC's proposed simplified equivalent model for distributed PV systems (*PVD1*) behind a single equivalent distribution feeder impedance (Figure 24) can currently be regarded as the "best-in-class" reduced-order modeling approach for *practical* power system studies. This model is described in WECC's "PV Power Plant Dynamic Modeling Guide" [6] and is similar to the model described in [34] for the first time.

WECC's Simplified Equivalent Model for Distributed PV (PVD1)

WECC's simplified equivalent model for distributed PV systems (*PVD1*) is a highly reduced, almost algebraic model to represent distributed PV systems in bulk system stability studies. It includes active power control, reactive power control, and protective functions [35] and can account for partial tripping of distribution connected PV systems without the need to represent the distribution feeders explicitly; it can also consider the evolving mix of distributed energy resources with and without ride-through capabilities, hence beyond default settings in IEEE Std. 1547-2003 [7]. The model structure of *PVD1* is shown in the Figure 24.

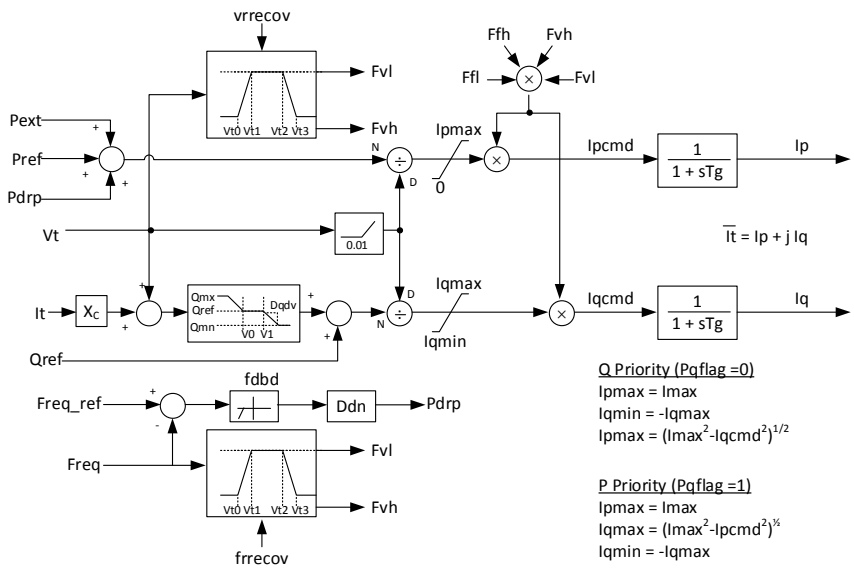

Figure 2
WECC Distributed PV Model Block Diagram. Source: EPRI figure based on [36].

An indicative verification and analysis of the accuracy of the *PVD1* model has been conducted by EPRI in [37], including a comparison of modeling results with a more detailed DER aggregation technique as proposed in [2]. It was shown that the *PVD1* model accurately represents the amount of tripped DER power in the post-fault period as long as 'dynamic voltage support' from new-to-be connected DER is neglected. The *PVD1* model simplifies the DER dynamics that occur *during* the fault period significantly by assuming 'momentary cessation' of DER that ride through faults; this could potentially overestimate the amount of partial DER tripping. Neither does the *PVD1* model represent the delay of the protection functions. Overall, the *PVD1* model tends to produce conservative results because it tends to suggest a greater loss of DER generation than it would likely be seen in the real system being simulated.

With the current limitations of WECC's *PVD1* model to represent dynamics during the fault period, the *PVD1* model may not be suitable for this type of study. The use of detailed generic DER models used for utility-scale DER (larger than 10 MVA) is recommended.

WECC's Composite Load Model with Distributed PV (CMPLDWG)

Besides modeling of DER, proper representation of load, especially in terms of voltage dependency is important [38]. Figure 3 illustrates WECC's Composite Load Model [39] with distributed PV (*CMPLDWG*). The *PVD1* model is currently integrated into this model in a fixed way which limits the flexible use of the model. That said, it is expected that a modular approach will become available in the near future.

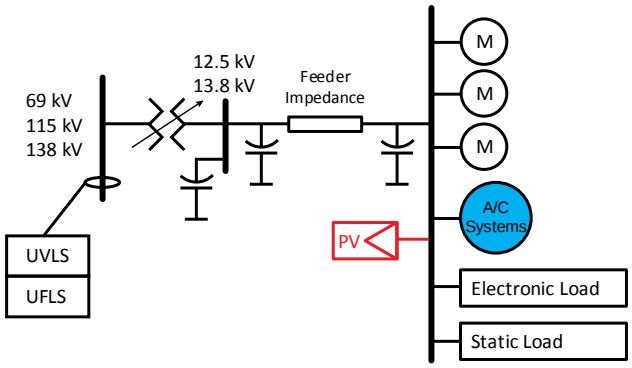

Figure 3
Distributed PV Model Block Diagram. Source: EPRI figure based on [39].

Data requirements and information sharing across the T&D interface

With Distributed Energy Resources being connected at the distribution level but having potential impact at the bulk system level, the following recommendations can be given with regard to data requirements and the sharing of information across the Transmission & Distribution (T&D) interface in order to allow for adequate assessment of future DER deployments:

1. DER data in an aggregated way for each substation, including data to represent a mix of DERs that trip and have ride-through ("legacy").
    1. DER type.
    2. DER rated MVA.
    3. DER rated power factor.
    4. DER PCC voltage.
    5. DER location: behind-the-meter / in-front-of-the-meter.
    6. Date that DER went into operation.
2. High-level clustering of distribution grids / a set of default equivalent impedances for various distribution grid types that can be used to choose adequate parameters for, e.g., WECC's PVD1 model for distributed PV systems.
3. Relevant interconnection performance requirements based on national or regional standards.
4. Distributed energy resources stability models and their parameters. In particular the regionally-specific parameters Vt0, Vt1, Vt2, and Vt3 of WECC's distributed PV model (*PVD1*).

Formatted: Bulleted + Level: 1 + Aligned at: 0.25" + Indent at: 0.5"

Formatted: Bulleted + Level: 2 + Aligned at: 0.75" + Indent at: 1"

Formatted: Bulleted + Level: 1 + Aligned at: 0.25" + Indent at: 0.5"

The recommended data requirements should be considered by the Regional Committees and specified in Regional Criterion such as WECC's "Steady State and Dynamic Data Requirements MOD-(11 and 13)-WECC-CRT-1 Regional Criterion" [5] and others.

Additional data requirements may include real-time generation profiles of DERs in order to derive meaningful dispatch scenarios rather than worst-case dispatches for bulk system planning studies. Although such data may be desirable, it is deemed outside NERC's mandate to require the collection of such data from DERs.

Conclusions and Recommendations

The increasing amount of Distributed Energy Resources (DERs) connected to the distribution system requires consideration of these resources in bulk power system planning studies. DERs should not be netted with load in

the future but be explicitly modeled in (a) steady-state power flow and short-circuit studies and (b) dynamic disturbance ride-through studies and transient stability studies for bulk system planning with a level of detail that is appropriate to represent the aggregate impact of DERs on the modeling results over a 5-10 year planning horizon.

Dynamic models for different DERs technologies are available and can presently be used to model the evolving interconnection requirements related performance requirements. WECC's simplified distributed PV model (*PVD1*) [6] currently seems to be the most promising concept to reach a reasonable balance between modeling accuracy, computational requirements, and handling of the system model, but some further improvement may be needed.

Minimum data requirements and the sharing of information across the Transmission & Distribution (T&D) interface will be required in order to allow for adequate assessment of future DER deployments.

Further research is needed to enhance grey box model structures and parameter identification techniques recently proposed and validated in [6] by explicitly considering the active distribution system's composition with regard to the interconnection requirements-related performance framework and either the explicit modeling of the low-voltage (LV) and medium-voltage (MV) equivalent impedances. Alternately, the aggregate DER response due to these impedances could be modeled by the use of equivalent voltage-dependent control blocks in the equivalent DER generator model. The consideration may not need to be extremely system-specific but rather based on generalized system characteristics that may account for regional differences of distribution system topologies and feeder impedances (e.g., for urban, sub-urban and rural feeders).

A *modular approach* to represent DERs in bulk system studies as illustrated in Figure 1 is recommended to ensure accurate representation of the resources for the specific bulk system study type.

Finally, the limited existing knowledge and experience of modeling DERs in bulk system planning studies require future collaborative research, knowledge exchange, and learning. The industry should collaborate with vendors of simulation software in order to continuously enhance equivalent models for DER representation in bulk system planning studies.

References

[1] E. van Ruitenbeek et al., "A Proposal for New Requirements for the Fault Behaviour of Distributed Generation Connected to Low Voltage Networks," presented at the 4th International Workshop on Integration of Solar Power into Power Systems, Berlin, Germany (10-11 November, 2014). Edited by Uta Betancourt and Thomas Ackermann. Langen: Energynautics GmbH, 2014.

[2] J.C. Boemer et al., "Methodology to Create Dynamic Equivalents of Active Distribution Systems for Use in Stability Studies of Sustainable Power Systems in Transition*: Paper under review," IET Renewable Power Generation*, 2016.

[3] *Transmission System Planning Performance Requirements*, NERC TPL-001-4. NERC, 2014.

[4] WECC System Review Work Group. *WECC Data Preparation Manual for Steady-State and Dynamic Base Case Data.* Western Electricity Coordinating Council: October 2014.

[5] WECC. *Steady State and Dynamic Data Requirements MOD-(11 and 13)-WECC-CRT-1 Regional Criterion.* Western Electricity Coordinating Council: June 26, 2013.

[6] WECC Renewable Energy Modeling Task Force. *WECC Solar Power Plant Dynamic Modeling Guidelines.* Western Electricity Coordinating Council: April 2014.

[7] *Standard for Interconnecting Distributed Resources with Electric Power Systems*, IEEE Std. 1547-2003. IEEE Standards Coordinating Committee 21, 2003.

[8] FERC. *Small Generator Interconnection Procedures (SGIP). For Generating Facilities No Larger Than 20 MW.* RM13-2-000. September 19, 2009.

[9] ———. *Small Generator Interconnection Agreement (SGIA). For Generating Facilities No Larger Than 20 MW.* RM13-2-000. September 19, 2009.

[10] California Public Utility Commission, "ELECTRIC RULE NO. 21*: GENERATING FACILITY INTERCONNECTIONS,"*. Accessed April 24, 2012, http://www.pge.com/tariffs/tm2/pdf/ELEC_RULES_21.pdf.

[11] *Draft Standard for Interconnection and Interoperability of Distributed Energy Resources with Associated Electric Power Systems*, IEEE P1547/D3. IEEE Standards Coordinating Committee 21, 2016.

[12] FERC. *Requirements for Frequency and Voltage Ride Through Capability of Small Generating Facilities. Notice of proposed rulemaking (NOPR).* Docket No. RM16-8-000. March 17, 2016.

[13] California Public Utilities Commission. *Interim Decision Adopting Revisions to Electric Tariff Rule 21 For Pacific Gas and Electric Company, Southern California Edison Company, and San Diego Gas & Electric Company to Require "Smart" Inverters.* COM/MP6/lil. December 18, 2014.

[14] German Government, "Verordnung zu Systemdienstleistungen durch Windenergieanlagen (Systemdienstleistungsverordnung – SDLWindV) (Ordinance for Ancillary Services of Wind Power Plants (Ancillary Services Ordinance - SDLWindV)," *Federal Law Gazette* Vol. I, No. 39, pp. 1734-1746 (2009).

[15] WECC Modeling and Validation Work Group. *WECC Wind Power Plant Dynamic Modeling Guide.* Western Electricity Coordinating Council: April 2014.

[16] *Wind turbines - Part 27-1: Electrical simulation models – Wind turbines*, IEC 61400-27-1. IEC Vol. ICS 27.180:2015, 2015.

[17] P. Pourbeik. *Proposed Changes to the WECC WT3 Generic Model for Type 3 Wind Turbine Generators:* Issued: 03/26/12 (revised 6/11/12, 7/3/12, 8/16/12, 8/17/12, 8/29/12, 1/15/13, 1/23/13, 9/27/13). Prepared under Subcontract No. NFT-1-11342-01 with NREL.

[18] ———. *Proposed Changes to the WECC WT4 Generic Model for Type 4 Wind Turbine Generators:* Issued: 12/16/11 (revised 3/21/12, 4/13/12, 6/19/12, 7/3/12, 8/16/12, 8/17/12, 8/29/12, 1/15/13, 1/23/13). Prepared under Subcontract No. NFT-1-11342-01 with NREL.

[19] J. Fortmann et al., "Wind Plant Models in IEC 61400-27-2 and WECC -Lastest Developments in International Standards on Wind Turbine and Wind Plant Modelling," presented at the 14th International Workshop on Large-Scale Integration of Wind Power into Power Systems as well as on Transmission Networks for Offshore Wind Power Farms, Brussels, Belgium (22-23 October, 2015). Edited by T. Ackermann and U. Betancourt., 2015.

[20] WECC Modeling and Validation Work Group. *WECC Guide for Representation of Photovoltaic Systems In Large-Scale Load Flow Simulations.* Western Electricity Coordinating Council: January 2011.

[21] FGW. *Technical Guidelines for Power Generating Units: Part 4 -Demands on Modelling and Validating Simulation Models of the Electrical Characteristics of Power Generating Units and Systems.* FGW e.V. Fördergesellschaft Windenergie und andere Erneuerbare Energien, Kiel. 7th ed.: April 07, 2014.

[22] Kundur, P. *Power system stability and control*. New York: McGraw-Hill, Inc., 1994.

[23] *IEEE Recommended Practice for Excitation System Models for Power System Stability Studies*, IEEE Std 421.5-2005. IEEE, 2006.

[24] F. Edwards et al., "Dynamics of distribution networks with distributed generation," presented at the 2000 IEEE Power Engineering Society Summer Meeting, Seattle, Washington, USA (16 - 20 July, 2000). Vol. 2, 1032-1037 vol. 2. Piscataway, NJ: IEEE Service Center, 2000.

[25] R. Guttromson, "Modeling distributed energy resource dynamics on the transmission system," *Power Systems, IEEE Transactions on* Vol. 17, No. 4, pp. 1148-1153 (2002). doi:10.1109/TPWRS.2002.804957.

[26] T. Tran-Quoc et al., "Stability Analysis for the Distribution Networks with Distributed Generation," presented at the 2005/2006 IEEE PES Transmission and Distribution Conference and Exhibition, Dallas, TX (21 - 24 May, 2006). 1-3, 289–94. Piscataway, NJ: IEEE, 2006.

[27] J. Klimstra, "Fault ride-through capability of engine-driven power plants," presented at the 2009 POWER-GEN Europe, Koelnmesse, Cologne, Germany (26 - 28 May 2009, 2009). Edited by PennWell. PennWell, 2009.

[28] J.C. Boemer, "On Stability of Sustainable Power Systems*: Network Fault Response of Transmission Systems with Very High Penetration of Distributed Generation,"*. Dissertation, Intelligent Electrical Power Grids, Delft University of Technology, June 2016.

[29] J.C. Boemer, M. Gibescu, and W.L. Kling, "Dynamic Models for Transient Stability Analysis of Transmission and Distribution Systems with Distributed Generation: an overview," presented at the IEEE PowerTech, Bucharest, Romania (June 28 – July 2, 2009). Edited by IEEE., 2009.

[30] F.O. Resende, J. Matevosyan, and J.V. Milanovic, "Application of dynamic equivalence techniques to derive aggregated models of active distribution network cells and microgrids," presented at the 2013 IEEE Grenoble PowerTech, Grenoble, France (16-20 June, 2013), 1–6., 2013.

[31] E. Muljadi et al., "Equivalencing the collector system of a large wind power plant," presented at the 2006 IEEE Power Engineering Society General Meeting, Montreal, Quebec., Canada (2006), 9 pp., 2006.

[32] S. Mat Zali, and J.V. Milanovic, "Generic Model of Active Distribution Network for Large Power System Stability Studies," *IEEE Transactions on Power Systems*, 2013. doi:10.1109/TPWRS.2012.2233223.

[33] J.V. Milanovic, and S. Mat Zali, "Validation of Equivalent Dynamic Model of Active Distribution Network Cell," *IEEE Transactions on Power Systems* Vol. 28, No. 3, pp. 2101–10 (2013). doi:10.1109/TPWRS.2012.2227844.

[34] S. Sugita et al., "Study of modeling method of distributed generators considering partial dropout for trunk transmission system," presented at the 2010 International Power Electronics Conference-ECCE Asia, Sapporo, Japan (June 21-24, 2010), 975–80. [Piscataway, N.J.]: IEEE, 2010.

[35] R.T. Elliott et al., "Generic photovoltaic system models for WECC - A status report," presented at the 2015 IEEE PES General Meeting, Boston, MA (26-30 July, 2015), 1–5., 2015.

[36] WECC Renewable Energy Modeling Task Force. *Generic Solar Photovoltaic System Dynamic Simulation Model Specification.* Western Electricity Coordinating Council: September 2012.

[37] EPRI. *Analysis of Voltage and Frequency Performance of the Bulk System with High Levels of Variable Generation and Distributed Energy Resources: Case Studies and Lessons Learned.* Electric Power Research Institute (EPRI), Palo Alto, CA: February 2016. 3002007496.

[38] CIGRÉ Working Group C4.605. *Modelling and Aggregation of Loads in Flexible Power Networks: Final Report*. 2014. TB 566.

[39] WECC Modeling and Validation Work Group. *Composite Load Model for Dynamic Simulations.* Western Electricity Coordinating Council. Report 1.0: June 12, 2012.

Chapter 4 - DER Operating Characteristics

What are Distributed Energy Resources' operating characteristics? *Jason MacDowell, Rich Hydzik, Dariush Shirmohammadi*

a. IEEE 1547 Requirements
    i. Now
    ii. Future
b. Frequency and voltage ride through (pending NERC PRC-024-2)
c. Active fault source?
d. Can it run independently of utility connection?
e. "Smart" or passive?
f. Governor action
g. FERC Notice of Inquiry on Primary Frequency Response
h. FERC Notice of Proposed Rulemaking – Voltage Support and Control

Chapter 5 - Effects of DER on the Bulk Electric System

What effects to Distributed Energy Resources have on the Bulk Electric System (BES)? – *Tony Jankowski, Gary Keenan, Charlie Smith, Dariush Shirmohammadi*

a. Planning – What is the net load? What is the peak load to serve?
b. Operations – MSSC how big is it?
c. Negative distribution load? Flow up the transformer? Fault source?
d. Balancing Authority Load
    a. DER nets with load from BA perspective
    b. Steady or variable?
    c. Predictable in BA load forecast?
    d. How does it affect operating reserve requirements?
e. X

Background: NERC has taken a detailed look at the potential impacts of DER on the BES in the form of distribution connected PV. This work has been reviewed and documented in the Task 1-7 report of the IVGTF, **Performance of Distributed Energy Resources During and After System Disturbance: *Voltage and Frequency Ride-Through Requirements,*** issued in December of 2013. This section is based on the findings of the Task 1-7 report. [Rich, this is a lightly edited summary of that work with original figure references. It can be further edited and summarized depending on level of detail desired.]

A large amount of distribution-connected generation may have significant effect on the reliability of the bulk power system. Existing interconnection requirements for DERs do not specifically take into account potential effects on bulk system reliability. Of particular concern to BPS reliability is the lack of disturbance tolerance, which entails voltage ride through (VRT) and frequency ride through (FRT) capability. Under high penetration scenarios, it is possible for a large amount of DERs to trip on voltage or frequency due to a transmission contingency, which could potentially affect bulk power system stability. These resources are required to comply with IEEE Standard 1547, which at present does not contain any VRT or FRT stipulations. Instead, IEEE Standard 1547 requires DERs to disconnect from the grid within a short period of time after voltage or frequency fall outside a certain range. The results of the IEEE Standard P1547a ballot were announced in September of 2013, and the outcome was that VRT and FRT are now permitted, but not required. The current revision underway is intended to address both of these issues.

The IVGTF made the following general recommendations in its report:

1. *In the short-term, NERC should engage in current efforts to revise DER interconnection standards by providing information, raising awareness and encouraging the adoption of VRT and FRT for DERs. The initial focus should be on identifying the need for adopting minimum tolerance thresholds for VRT and FRT in the IEEE Standard 1547 and, then, establishing those minimums.*

Formatted: Numbered + Level: 1 + Numbering Style: 1, 2, 3, … + Start at: 1 + Alignment: Left + Aligned at: 0.25" + Indent at: 0.5"

2. *In the longer-term, NERC should establish a coordination mechanism with IEEE Standard 1547 to ensure that BPS reliability needs are factored into future DER interconnection standards revision efforts. To date, BPS stakeholders have participated only sporadically in the IEEE Standard 1547 process. As a result, VRT and FRT concepts receive limited consideration and may have been outweighed by distribution system protection concerns. This liaison process would be too late for the P1547a amendment, but it would be timely for the full revision to begin in December 2013.*

Formatted: Numbered + Level: 1 + Numbering Style: 1, 2, 3, … + Start at: 1 + Alignment: Left + Aligned at: 0.25" + Indent at: 0.5"

Introduction: Distribution-connected PV generation is expected to grow very fast in some regions over the next decade. A large amount of distribution-connected generation or distributed energy resources (DERs) can have significant effect on the reliability of the bulk power system. However, present interconnection standards applicable to DER do not address or take into account this potential impact. Of particular concern to bulk system reliability in North America is the lack of disturbance tolerance requirements for DERs, specifically voltage ride-through (VRT) and frequency ride-through (FRT).

In North America, VRT and FRT standards for both BPS-connected and distribution-connected generators are in a state of evolution. NERC Reliability Standard PRC-024-1 was recently approved as a relay setting requirement. The standard requires that generator voltage and frequency relays not be set to trip within the specified frequency and voltage performance envelopes, unless it is necessary to do so to protect equipment or meet one of several other exceptions. With respect to disturbance tolerance, DER interconnection standards are inconsistent with the direction in which bulk system standards are evolving.

IEEE Standard 1547 is the *de-facto* interconnection standard applicable to DERs in North America. Interconnection requirements applicable in Canada are harmonized to a large extent with IEEE Standard 1547. IEEE standards are, by definition, voluntary; however, they may be made mandatory by regulatory authorities or by utilities to which interconnection is made. So, in practice, IEEE Standard 1547 is a requirement in most places but not universally in the NERC interconnections. Rather than VRT and FRT provisions, the existing IEEE Standard 1547 contains "must-trip" provisions for off-nominal voltage and frequency that raise the possibility of compounding transmission contingencies with sympathetic loss of significant amounts of distributed generation. These requirements were originally driven by safety and protection/control coordination of distribution systems, and did not consider the possibility of high penetration of DERs in the system. As DER capacity continues to increase, sympathetic DER tripping due to a BPS contingency could become significant enough to negatively impact bulk system reliability.

Need for Disturbance Tolerance: In order to ensure a high degree of reliability of the interconnected power system, it is imperative that bulk generation and transmission elements have a degree of disturbance tolerance. A principle of system protection is that elements should not be intentionally tripped unless it is necessary to clear a fault, to prevent equipment damage, or to preserve system stability. All other elements should remain connected to the grid and contribute to frequency and voltage recovery following the disturbance. Disturbance tolerance is a required element to prevent cascading outages following voltage or frequency excursions that happen during normal system operation. This philosophy is reflected explicitly or indirectly in bulk-level grid codes or interconnection standards, including the recently approved NERC Reliability Standard PRC-024-1.

In contrast, with the expectation of disturbance tolerance for BPS-connected generators, IEEE Standard 1547 contains only must-trip requirements whereby DERs must disconnect within a short period of time when voltage or frequency fall outside a certain range. For example, a DER that experiences a voltage drop to 0.5 p.u. or lower would be required to trip within 10 cycles. This kind of voltage sag could occur over a fairly large area of the system during transmission system faults. While distribution facilities often have voltage regulation capability to offset voltage drops on the system, if the voltage drop is not countered this could exacerbate transmission contingencies and, in worst cases, contribute to a cascading outage if these contingencies are not studied and the effects properly mitigated per the TPL standards. Thus, under high penetration of DERs the existing provisions of the IEEE Standard 1547 could adversely affect bulk electric system reliability.

IEEE Standard 1547 must-trip requirements were in response to safety and protection/control coordination at the distribution systems level. When IEEE Standard 1547 was first developed, there were not large penetrations of DERs and BPS reliability was not a factor. It was not anticipated that distributed generation would be playing a significant role in power supply. In the near future, DER (especially PV) is expected to grow to the point that the

must-trip requirements contained in IEEE Standard 1547 may play an important role in the transient behavior of the bulk power system following system disturbances.

Potential System Reliability Impacts: When DER levels in a given region can be significantly high, the concern is that BPS disturbances that would otherwise have negligible impact may challenge the IEEE Standard 1547 trip thresholds and, thus, become compounded by sympathetic tripping of a significant amount of DERs. In worst cases, this could lead to an increased exposure to system instability, under-frequency load shedding or cascading outages over large areas of the interconnected system. As noted in IEEE Standard 1547, the frequency and voltage trip settings were designed to protect distribution circuits and potential BPS system impacts were not the primary consideration. In most North American power systems, and especially in the Eastern Interconnection, DER penetration is low in most jurisdictions. However, DER penetration on some systems is increasing and has the potential to grow rapidly in the future. With this in mind, potential reliability issues need to be addressed proactively by updating and enhancing standards when gaps are identified. Revising standards and other interconnection requirements on the front-end is generally preferable to implementing costly retrofits to legacy equipment in the future. Certain entities in Europe--particularly Germany where penetration levels on the distribution system are very high compared to the North American systems--have recognized this reliability exposure and have taken steps in the form of revised interconnection standards for DERs.

Voltage Tolerance: As of January 2012, approximately 4,800 MW of wind and 205 MW of solar generation were interconnected on the PJM transmission (primarily) system. PJM has approximately 22,680 MW of wind projects and 1,650 MW of solar projects in the interconnection queue. A PJM Renewable Integration Study15 illustrates that for the 2026 time frame, various scenarios estimate distributed solar PV to be about 4,100 MW in the base case and 34,710 MW in a high-solar penetration scenario case. The range in the scenarios is dependent on a number of factors, but is primarily attributed to the range of uncertainty in the timing and aggressiveness of respective state renewable portfolio standards. Figure 5 below shows expected locations of central and distributed solar resources in a high penetration scenario.

Figure 5: High Solar Generation Scenarios used in PJM Renewable Integration Study

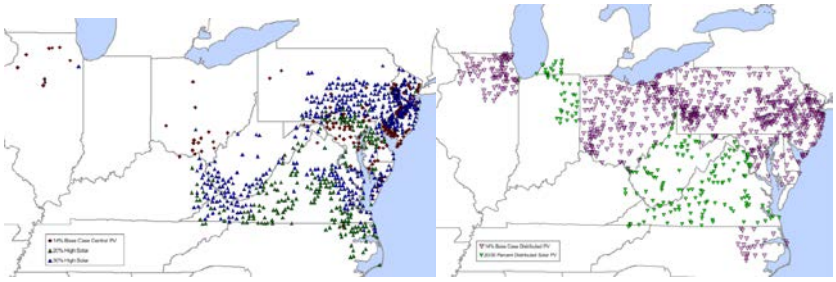

According to the existing IEEE Standard 1547, DERs that experience voltage drop to 0.5 pu or lower at their interconnection point are required to trip within ten cycles (0.16 seconds). This kind of voltage sag would not be uncommon over a fairly large area of the system during transmission system faults. In addition, since the DER trip requirement in IEEE Standard 1547 is a maximum trip and clear time, trip must be initiated before the clearing time. Figure 6 below shows the extent of voltage depression below 50% of nominal for BPS faults at various EHV locations. In the shaded areas, DERs connected to distribution circuits served from that portion of the transmission system are likely to trip on under voltage within ten cycles. It should be noted that, in this case, the fault is not on the distribution system, the distribution protective system is not required to clear the fault, and the possibility of a localized islanding situation does not exist. Yet, if the penetration of DERs in this region is

high enough, a transmission contingency would be compounded which can potentially increase the probability of a cascading disturbance if not studied and properly mitigated. The Hawaiian Electric companies (Hawaiian Electric, Maui Electric, and Hawaii Electric Light) all have DER penetration levels that already affect the local bulk power system reliability. For this reason the DER frequency trip settings have been adjusted to the maximum duration/lowest frequency settings available. Voltage setting requirements are under evaluation.

Figure 6: Voltage Contours of Voltages during Faults on Two Different Transmission Buses

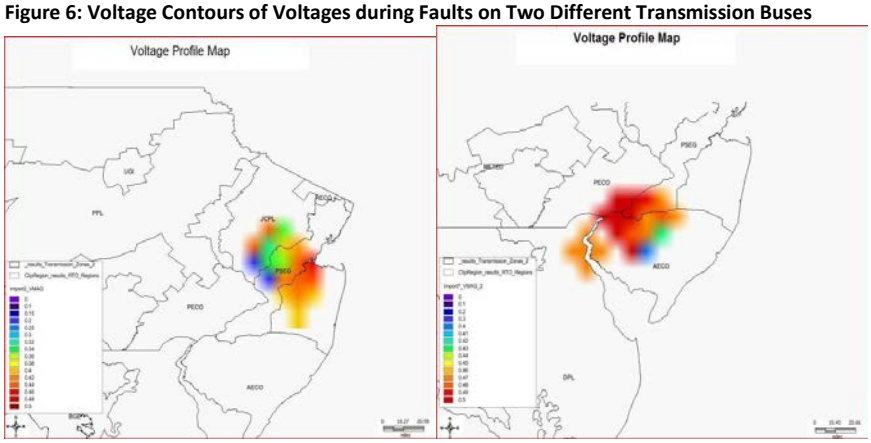

The bulk system reliability issue described above has been recognized and is being addressed by reliability organizations in Europe. A German association of energy industries (BDEW) issued a recommendation for generator interconnection at medium voltage (i.e., distribution-level voltages) that is more in line with grid codes for interconnection with the BPS. Figure 7, taken from Technical Guideline of BDEW for Generating Plants Connected to Medium-Voltage Network (published June 2008), shows the existing requirement for DER connected at Medium Voltage (10 kV to 60 kV) to remain connected without instability for voltage drops to zero at the interconnection point for 150 milliseconds.

Figure 7: Borderlines of the Voltage Profile of a Type-2 Generating Plant at the Network Connection Point

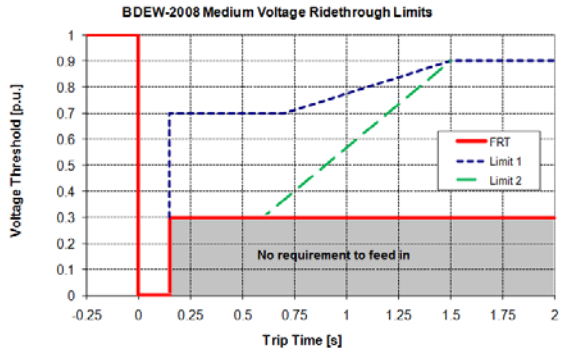

Adoption of this guideline was justified by reliability exposure similar to the scenario described above. Since the standard was adopted in April 2011, PV capacity in Germany has increased by more than 50% to 35 GW. Other jurisdictions have followed suit.

Fault induced voltage recovery (FIDVR) could also be exacerbated by under-voltage DER tripping. By definition, a FIDVR event lasts beyond fault clearing, possibly 10 to 20 seconds, and can be followed by high voltage due to switching of shunt devices as well as load tripping. With high penetration of DER in a load area, shunt capacitors and reactors configuration may be such that FIDVR could happen more frequently or more severely. DER tripping during the fault as well as during the FIDVR event would cause net load in the load area to increase, which can further delay voltage recovery and cause additional loss of load. For this reason, it would be advisable to consider longer voltage ride-through tolerance at a higher voltage (e.g., 70%).

Frequency Tolerance: Sudden changes in generation or load (such as that resulting from a large generating unit trip) result in system frequencies deviating from their normal ranges. Over a short control period, system frequency regulation controls like generator governors and Automatic Generation Control (AGC) would restore system frequency to within its normal range. However, if additional generation or load trips due to this frequency disturbance, it has a potential to amplify the disturbance and adversely affect system reliability. Therefore, to preserve system reliability, it is desirable for generators connected to the electric system to ride through such frequency disturbances, remain interconnected and stable, and continue operating close to their pre-disturbance levels. Overly sensitive frequency DER sensitivity could result in a frequency disturbance becoming compounded due to DER tripping, which delays frequency recovery and possibly leads to further under-frequency load shedding.

IEEE Standard 1547 requires DER to disconnect within 160 ms when frequency is above 60.5 Hz, or below 59.8 Hz (upper range of adjustability for DER >30 kW). In the Western Interconnection, a generation contingency of 2,000 MW could cause frequency to decrease to near or below 59.8 Hz for several seconds (Figure 9). A survey of the Western Interconnection generation contingencies for the time period of 1994 to 2004 shows that this level of generation loss happens roughly once a year. For the same generation loss, the frequency dip would be greater in a smaller interconnection and during light load periods. In a high penetration DER scenario, the possibility of significant DER tripping on under-frequency would impact the level of reserves required to ensure adequate frequency recovery.

As DER grows, tripping at frequencies not coordinated with system protection, and which are reached by contingencies, essentially increases the size of potential contingencies. To further complicate matters, the actual amount of MW from variable DER is difficult to determine in real time as it is not generally monitored, and therefore challenging to include as a consideration in operating reserves. Loss of DER during low-voltage transmission events will result in a net load increase, which will exacerbate low-voltage conditions and potentially result in collapse.

Figure 9: Western Interconnection Frequency for Various levels of Generation Loss21

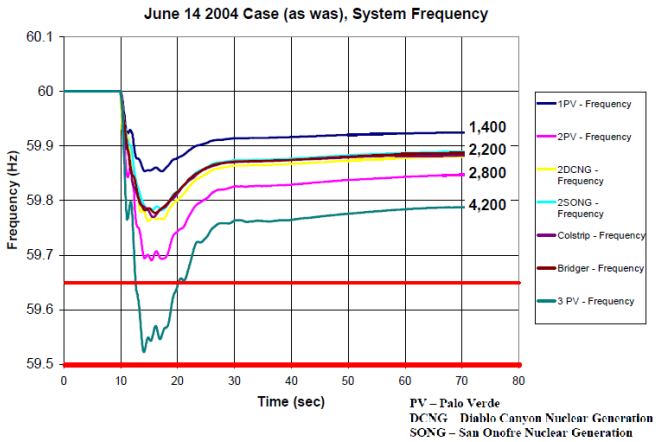

Under certain conditions, high frequency could also pose a reliability risk, and this has been recognized in Europe. In Germany, the applicable standard DIN V VDE V 0126-1-1:2006-02 requires that DER disconnect within 0.2 seconds when frequency reaches 50.2 Hz. Several other European countries use this standard as well. During the 2006 UCTE event, frequency in the Eastern portion of the system rose above 50.2 Hz. With the amount of DERs in the system today, the generation loss could have threatened the stability of the grid.

Recent efforts to address this reliability exposure, known as the 50.2 Hz problem, led to the adoption of requirements such as the BDEW high frequency droop, depicted in Figure 11. The concept is that DER output power will, in aggregate, be reduced in proportion to frequency and then return as frequency is restored rather than drop to zero. Concurrent with adoption of this requirement, a DER retrofitting campaign was undertaken to address the reliability exposure of the existing DER capacity. A similar retrofitting program was required in Spain to address wind generation low voltage ride-through.

Figure 11: Germany's (BDEW) Solution to Address Challenges—NERC is Proposing the Same

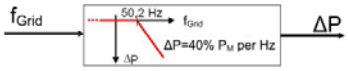

$$\Delta P = 20\, P_M \frac{50{,}2\ Hz - f_{Grid}}{50\ Hz} \quad \text{at } 50.2\ Hz <= f_{Grid} <= 51.5\ Hz$$

P_M = Generated Power

ΔP = Power Reduction

f_{Grid} = System Frequency

at 47.5 Hz <= f_{Grid} <= 50.2 Hz → No restrictions

at f_{Grid} <= 47.5 Hz or f_{Grid} >= 51.5 Hz → Disconnection

The need to address high frequency DER tripping was raised as part of FERC's Small Generator Interconnection Procedure (SGIP) Notice of Proposed Rulemaking Docket No. RM13-2-000. This issue was also discussed in the

context of IEEE Standard P1547a proceedings. A high frequency droop characteristic similar to the BDEW requirement described above has been proposed as an option, but not yet mandated.

Summary of VRT and FRT Requirements Applicable to BES-Connected Generators: The reliability of the bulk power system depends on most generators remaining connected in the event of a system fault. At the bulk system level, the expectation is that generators will remain connected during a disturbance and contribute to restoration of voltage and frequency as soon as possible. If even a few large generators fail to ride through a disturbance, the power system risks a cascading failure and blackout. Historically, this disturbance tolerance capability for conventional generators was considered inherent, rather than required by standards.

During the initial phase of large-scale VER deployment, there were no specific requirements for any generators to ride through faults. VERs were significantly smaller than conventional generators and could be distribution-connected. DER also added a complication to distribution circuit protection schemes. The dynamic response of inverter-based VERs was poorly understood or, in the case of induction-based wind generators, was known to be detrimental to voltage recovery. For these and other reasons, VERs were designed to quickly disconnect from the grid after a voltage or frequency disturbance. As the potential for large-scale integration of VERs became apparent, VER (wind) specific VRT/FRT requirements were incorporated into grid codes. Today, disturbance tolerance standards are still evolving. There are efforts to harmonize requirements so that they can be applied to all generators, not just VERs. In North America, there are several regional standards that address disturbance tolerance of transmission-connected generators. These are discussed below.

FERC Order 661A contains a low voltage ride-through (LVRT) requirement that applies only to FERC-jurisdictional (US only) wind generators larger than 20 MVA. FERC Order 661-A states:

> *"Wind generating plants are required to remain in service during three-phase faults with normal clearing (which is a time period of approximately 4–9 cycles) and single line to ground faults with delayed clearing, and subsequent post-fault voltage recovery to pre-fault voltage unless clearing the fault effectively disconnects the generator from the system. The clearing time requirement for a three-phase fault will be specific to the wind generating plant substation location, as determined by and documented by the transmission provider. The maximum clearing time the wind generating plant shall be required to withstand for a three-phase fault shall be 9 cycles after which, if the fault remains following the location-specific normal clearing time for three-phase faults, the wind generating plant may disconnect from the transmission system. A wind generating plant shall remain interconnected during such a fault on the transmission system for a voltage level as low as zero volts, as measured at the high voltage side of the wind GSU."*

ERCOT, WECC, the Quebec Interconnection, and other Canadian provinces have also established disturbance tolerance standards that apply within their own jurisdiction. In the case of WECC, the disturbance tolerance standard only addresses low voltage ride-through. In regions where there are no explicit FRT requirements (Eastern Interconnection and WECC, for example), new generators are expected to remain connected within the envelope defined by the off-nominal frequency programs applicable within the interconnection. BPS Reliability Standards apply to transmission-connected plants and generating units above a certain size.

NERC initiated a project to include FRT and VRT as part of NERC Reliability Standard PRC-024. The final version of the Standard approved by the NERC Board of Trustees in March 2013 addresses frequency and voltage relay settings, but does not establish an explicit disturbance tolerance requirement for generators. According to the standard, generators are allowed to trip for reasons other than voltage or frequency relay action, including impending or actual loss of stability, as needed for fault clearing or as part of a special protection scheme, and

documented regulatory or equipment limitations. While the standard is a relay setting standard, generator performance enhancements are expected as a result.

Figures 12 and 13 describe the "no-trip zone" for voltage and frequency contained in the NERC Reliability Standard PRC-024-1. The no-trip zone described in the NERC Reliability Standard PRC-024 applies to generator voltage and frequency protection relays. The time dimension is the cumulative time that the value (voltage or frequency) is more severe than that given value (e.g., voltage less than value for LVRT, greater value for HVRT). That is, the requirement does not establish continuous generator must-run ranges. For example, if voltage dips no lower than 0.8 pu, the corresponding relay must have an intentional delay no shorter than three seconds. Note that the frequency no-trip zone is defined differently among NERC interconnections, but the voltage no-trip zone is the same across the NERC footprint.

Figure 12: NERC Standard PRC-024-1 Generator Voltage Relay Setting Requirement

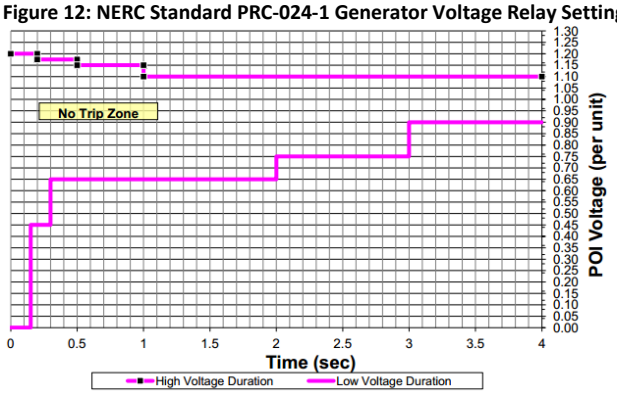

Figure 13: NERC Standard PRC-024 – Generator Frequency Relay Setting Requirement

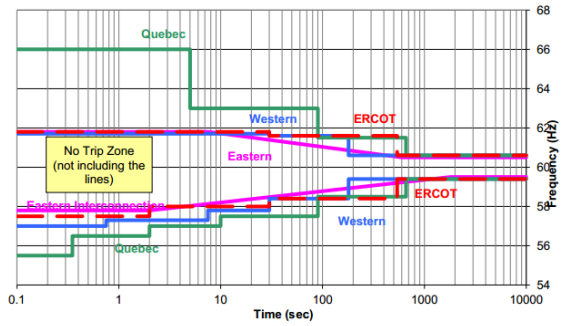

NERC Reliability Standard PRC-024-1 contains several clarifications that are useful to properly interpret the standard. It states, "Voltages in the curve assume minimum fundamental frequency phase-to-ground or phase-to-phase voltage for the low voltage duration curve and the greater of maximum RMS or crest phase-to-phase voltage for the high voltage duration curve." It clarifies that the curves apply to voltage excursions regardless of the type of initiating event, and lists several baseline assumptions to be used when evaluating protective relay settings. NERC Standard PRC-024 voltage relay standard applies at the point of interconnection.

Guidelines and Recommendations: The task force offered the following general guidelines on VRT and FRT specifications for distributed VERs and other DERs, for consideration in the IEEE Standard 1547 revision. It is assumed that VRT and FRT requirements would have to co-exist with revised "must trip" provisions needed to address safety and protection/coordination issues in distribution systems.

1. The revised IEEE Standard 1547 should allow for different methods of meeting the functional requirements of fault detection (clause 4.2.1), reclosing coordination (clause 4.2.2) and unintended islanding detection (clause 4.4.1). At present, DERs meeting those functional requirements would still have to trip on voltage (clause 4.2.3) and frequency (clause 4.2.4) excursions. Removing those linkages would help pave the way for VRT and FRT requirements. The IVGTF recognizes that these alternative methods are more expensive, require more engineering effort, and in some cases require further technical development. However, the increasing level of DER and the potential impact on the BPS justifies the effort.

~~2.~~1. The revised IEEE Standard 1547 should include explicit low and high VRT requirements. Likewise, the revised IEEE Standard 1547 should include explicit low and high FRT requirements. These requirements should be expressed as voltage versus cumulative time and frequency versus cumulative time requirements.

~~3.~~1. Must-trip voltage thresholds in the existing IEEE Standard 1547 should be extended to accommodate an effective VRT envelope without overlap (Figure 16).

   a. As an example, Figure 16 shows a possible approach to implement low voltage ride-through down to 50 percent voltage for 10 cycles (160 ms), within the existing IEEE Standard 1547 framework.

   b. Zero voltage ride-through is not required for BPS reliability. A ride-through level down to approximately 50 percent voltage would provide adequate tolerance during transmission faults.

   c. A ride through period longer than shown in Figure 16--possibly greater than 10 seconds--at higher voltage level (e.g., down to 70% voltage) may be needed to avoid compounding fault-induced delayed voltage recovery (FIDVR).

Formatted: Numbered + Level: 1 + Numbering Style: 1, 2, 3, … + Start at: 1 + Alignment: Left + Aligned at: 0.25" + Indent at: 0.5"

Figure 16: IVGTF 1-7 Recommended Ride-Through and Must-Trip Requirements for DER

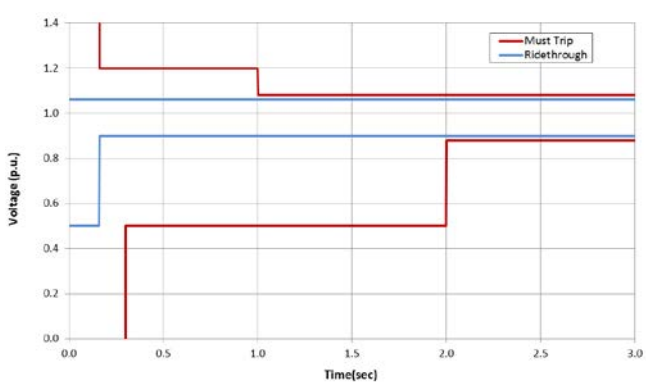

Must-trip frequency thresholds in the existing IEEE Standard 1547 should be extended to accommodate an effective FRT envelope without overlap.

The time dimension of the VRT/FRT curves discussed previously is meant to represent cumulative time elapsed since the onset of a disturbance event that result in temporary excursions of voltage and/or frequency. The VRT/FRT envelopes should not establish must-run ranges for generators (i.e., they should not prevent intentional shutdown of a DER for reasons other than grid voltage and frequency disturbances, such as normal shutdown of PV at night or by operator action.)

The prospective disturbance tolerance standard should provide a default VRT and FRT envelope, but should allow for the time and frequency/voltage magnitudes to be adjustable, within certain limits, for coordination with local protection, in coordination with the distribution system operator.

FRT and VRT requirements should cover all DERs that are normally grid connected, regardless of size or technology. However, a range of thresholds could be considered based on technology differences (e.g., inverter versus rotating machines), as some European grid codes do. In general, focusing requirements on the truly functional needs of the grid tends to eliminate the need to have technology-specific requirements.

The restarting of DERs during system restoration should be considered during the development of DER interconnection requirements. While the restoration situation in North America is somewhat mitigated at present by the sequential nature in which distribution feeders will likely be reenergized after a major blackout, reliability impacts of DERs should consider the automatic restarting of DERs. Failure to consider and mitigate these impacts could lead to further instability during a disturbance.

Chapter 6 - Applicable NERC Reliability Standards

Applicable NERC Reliability Standards – *Jason MacDowell, Gary Keenan*

a. MOD-010-0 Steady State Data for Modeling and Simulation of Interconnected Transmission System
b. MOD-012-0 Dynamics Data for Modeling and Simulation of the Interconnected Transmission System
c. MOD-016-1.1 Documentation of Data Reporting Requirements for Actual and Forecast Demands, Net Energy for Load, and Controllable Demand-Side Management
d. MOD-017-0.1 Aggregated Actual and Forecast Demands and Net Energy for Load
e. MOD-019-0.1 Reporting of Interruptible Demands and Direct Control Load Management
f. MOD-020-0 Providing Interruptible Demands and Direct Load Control Management Data to System Operators and Reliability Coordinators
g. MOD-021-1 Documentation of the Accounting Methodology for the Effects of Demand-Side Management in Demand and Energy Forecasts
h. MOD-031 is pending
i. MOD-032 replaces MOD-010
j. MOD-033 replaces MOD-012
k. PRC-006 UFLS
l. PRC-0?? UVLS schemes
m. PRC-019
n. PRC-024-2 (pending) Generator Voltage and Frequency Coordination

Chapter 7 - Recommendations

Recommendations

a. Connection requirements
b. Modeling
c. Performance requirements?
d. Accounting Load/Gen?
e. Modifications to any NERC Standards?

Task Force Membership

Miscellaneous (Appendices?)

~~1.~~a. IVGTF Task 1-7
~~2.~~b. DERSG
~~3.~~c. NERC Load Modeling TF

Formatted: Numbered + Level: 2 + Numbering Style: a, b, c, … + Start at: 1 + Alignment: Left + Aligned at: 0.75" + Indent at: 1"

TEMP: Examples of Tables, Figures and Highlight Boxes

TEMPORARY – TO BE DELETED LATER

*(**DELETE RED TEXT PRIOR TO PUBLISHING**) The Results section is where the author points out and explains significant data in text, tables, charts, and figures. It should include key trends or relationships and highlight unexpected as well as expected findings. This section should not include an analysis of the data—just the facts.*

Table Example

All tables must be numbered and named. Note the table title is part of the actual table. Report text should introduce the table by number ("Table 1") before it appears. Do not use the terms "above" or "below" when describing the table's location in case during formatting the table moves.

It may be prudent to do a page break (ctrl+enter) before a page with a table or figure on it. This will prevent the table from moving if text is changed on prior pages. If possible, try to keep the text that describes the table on the same page as the table.

Table 1: Report Template Formatting

	Font	Size	Typeface	Space Before	Space After	Color
Cover Page						
Title	Tahoma	48	Bold	0	0	white
Subtitle	Tahoma	24	Roman	0	0	white
Internal Pages						
Chapter Title	Tahoma	16	Bold	0	0	dark blue
Section Heading	Tahoma	14	Bold	0	0	black
Sub-Heading 1	Tahoma	11	Bold	0	0	black
Sub-Heading 2	Tahoma	11	Bold, Italic	0	0	black
Body Text	Calibri	11	Roman, Justified	0	0	black
Header/Footer	Calibri	9	Bold, Centered	0	0	dark blue
Footnotes	Calibri	9	Roman	0	0	black

Figure Example

All figures must be numbered and named. Note that the figure title goes below the figure and is centered. Report text should introduce the figure by number ("Figure 1") before it appears. Do not use the terms "above" or "below" when describing the figure's location in case during formatting the figure moves. Figures will be different sizes; their placement depends on author and proofer discretion. Do not stretch or shrink a figure, and do not use figures that are blurry or have illegible text. If a figure is blurry, it is the wrong size.

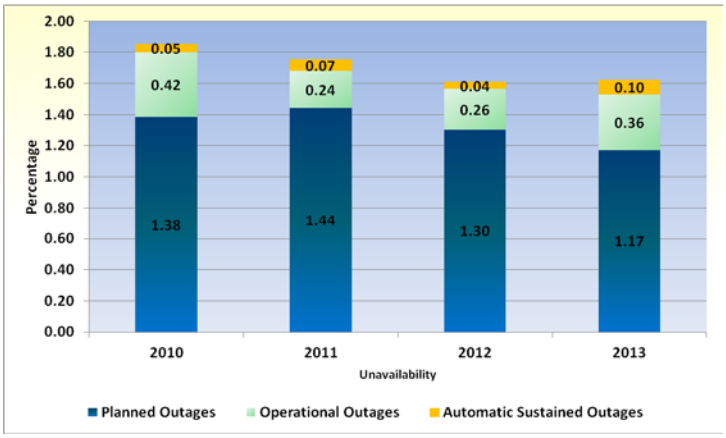

Figure 1: Unavailability of NERC Transmission Transformers by Outage Type (2010–2013)

Highlight Box Example

A highlight box is used to emphasize key terms, facts, figures, etc. Always use NERC Light Blue as the fill color. Refer to the NERC Style Guide (Chapter 6 – Formatting) for guidance on other NERC corporate colors.

California ISO

Overview of the California ISO operation on May 15, 2016

Clyde Loutan, Sr Advisor - Renewable Energy Integration, Market Analysis and Development

Expected solar generation growth between now and 2020

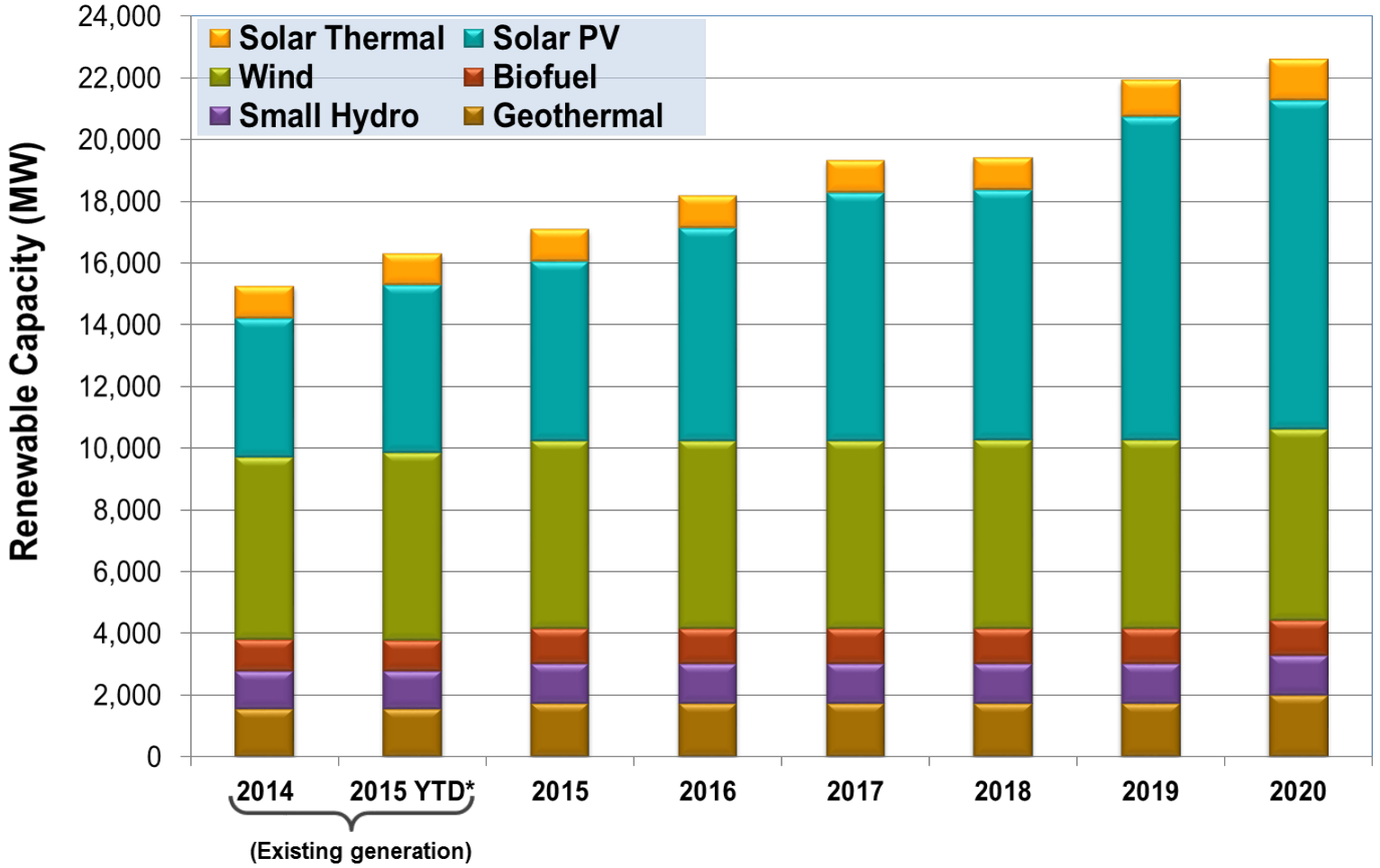

*All online resources are included in the 2015 YTD amounts, including those yet to achieve full commercial operation.

(IOU data through 2017 and RPS Calculator data 2018 – 2020)

Behind the meter solar PV build-out through 2021

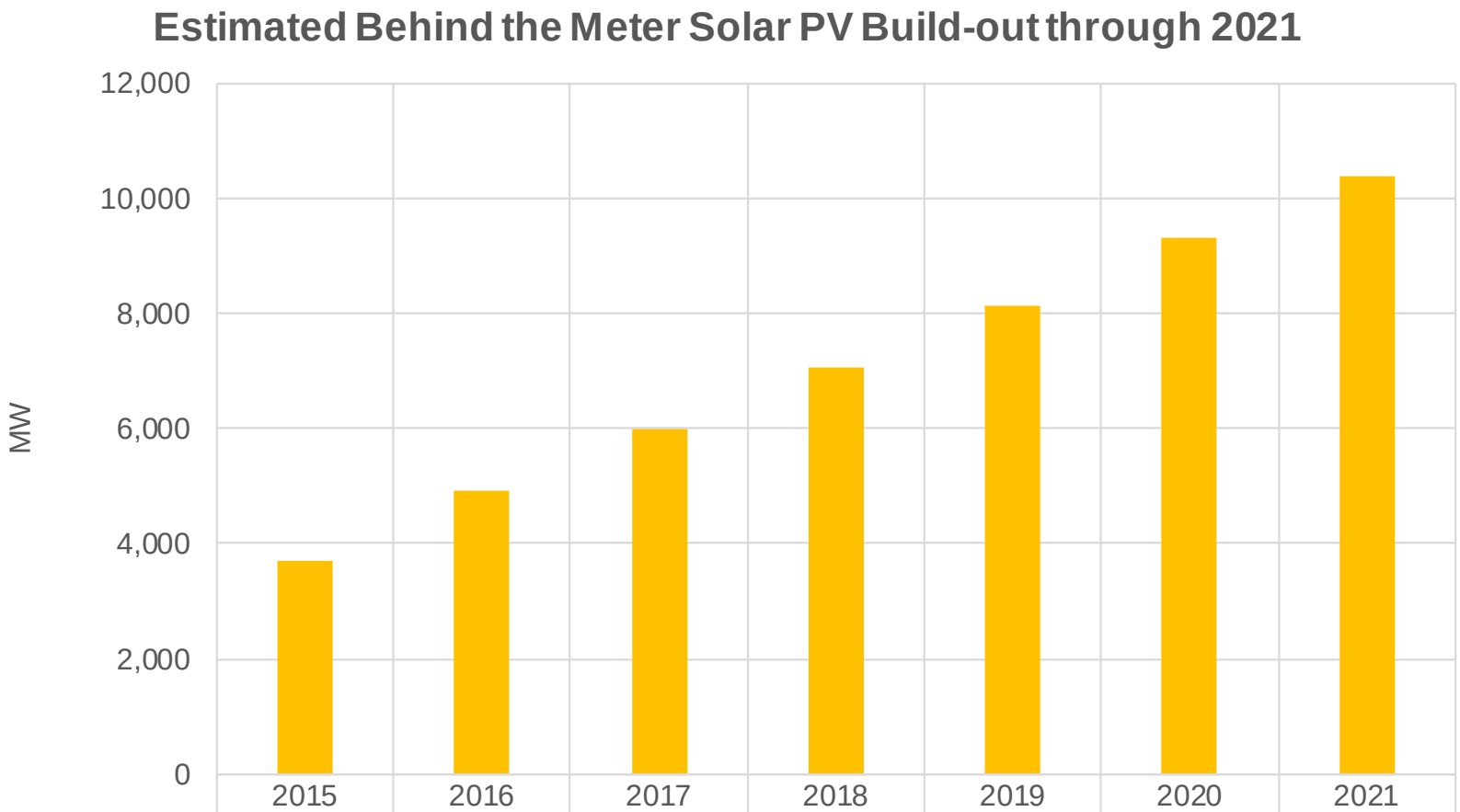

	2015	2016	2017	2018	2019	2020	2021
BTM Solar PV	3,695	4,903	5,976	7,054	8,146	9,309	10,385

Solar production varies from one day to the next --- first week of March 2014

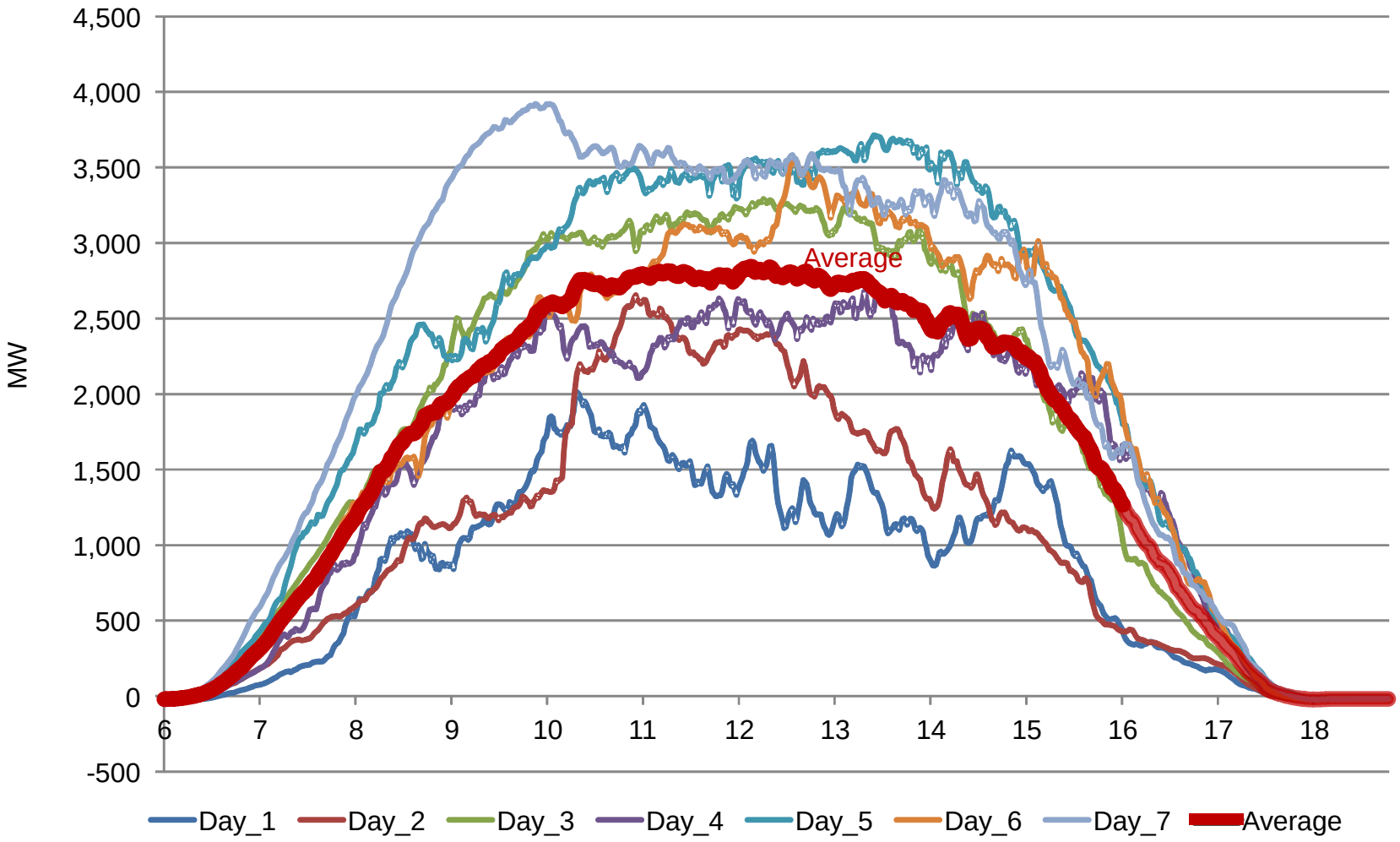

Wind production varies from one day to the next --- first week of March 2014

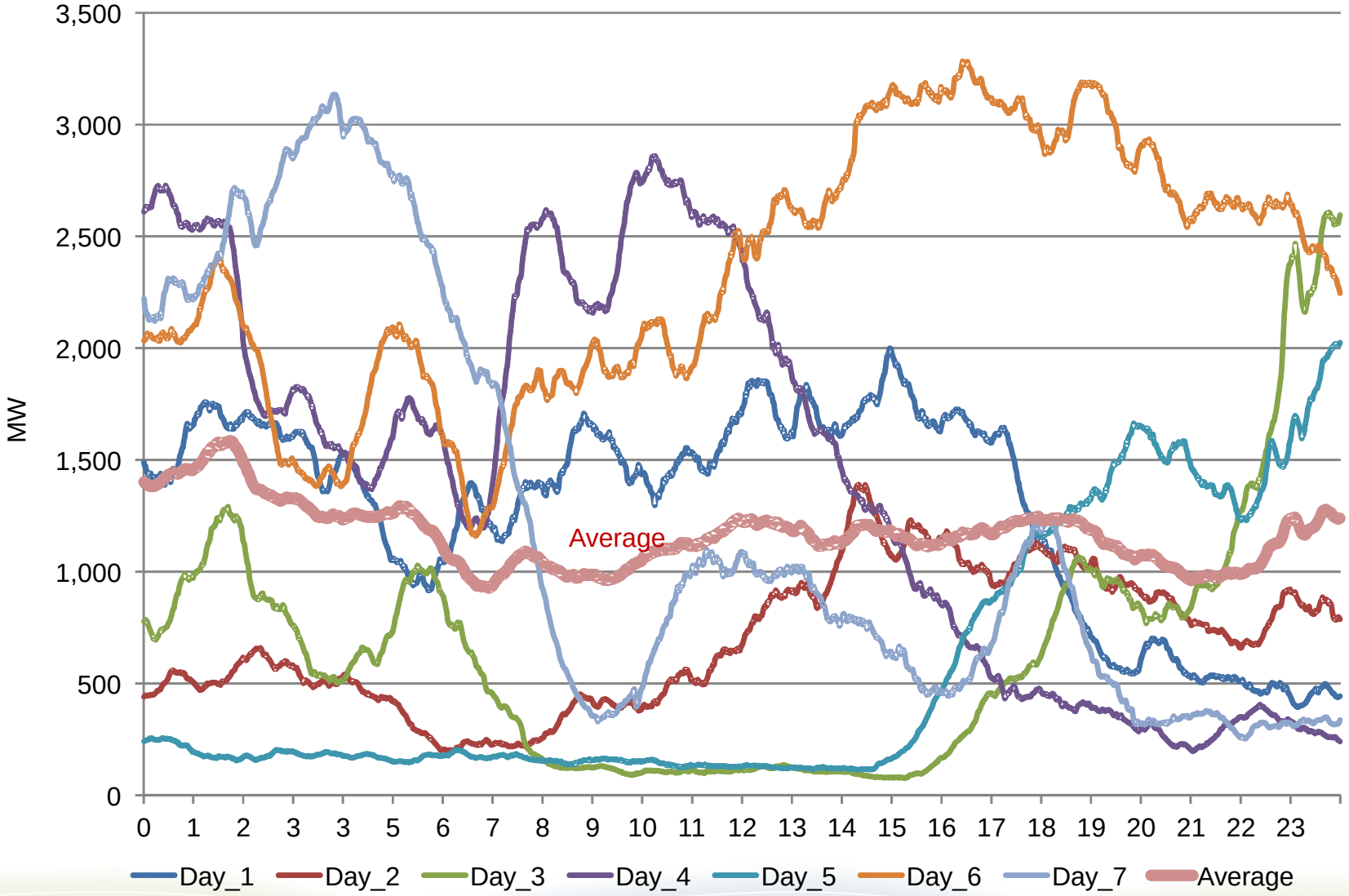

The ISO has already begun to experience the change on how flexible resources are used

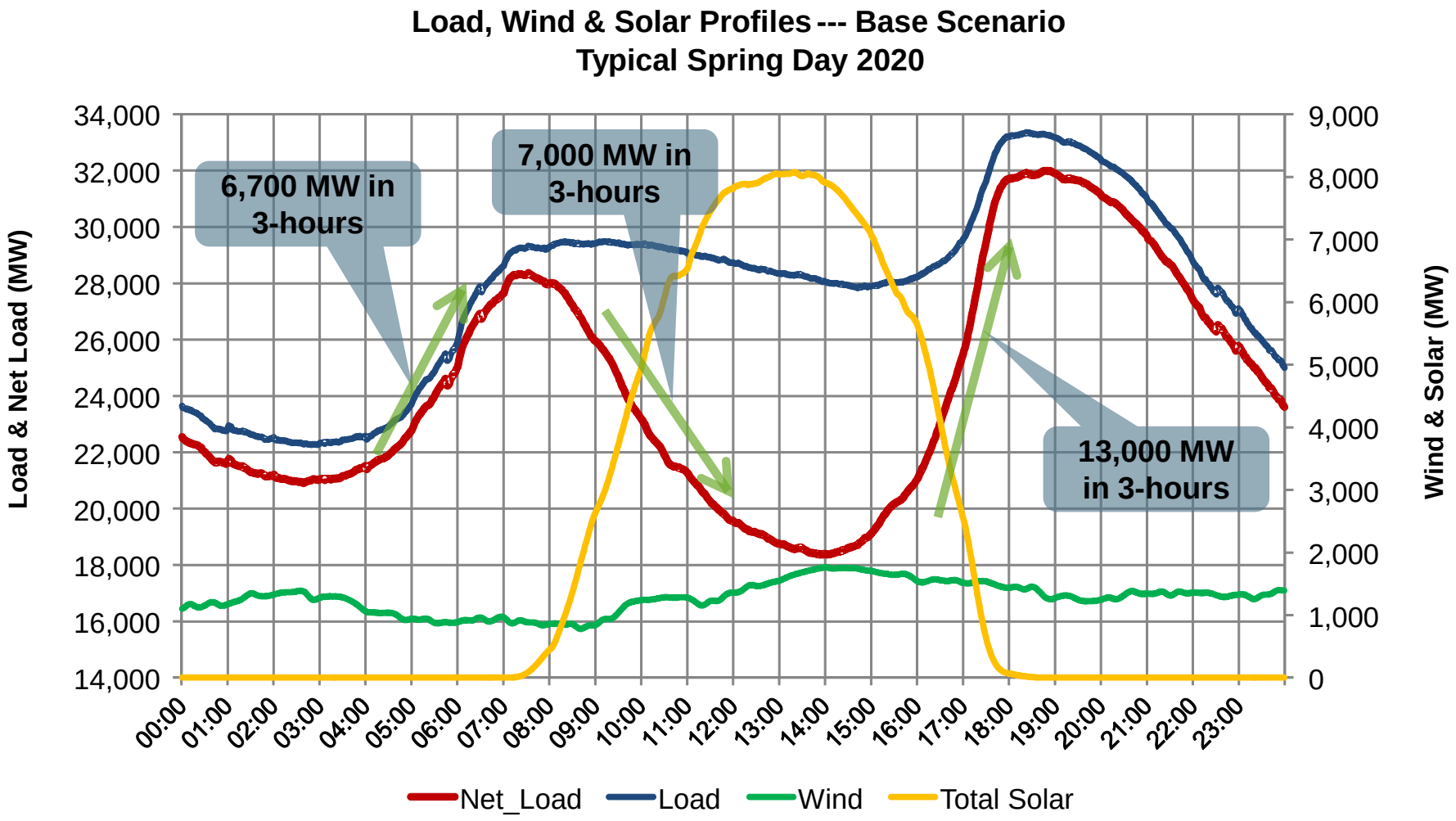

Net Load = Load - Wind - Solar

Original estimate of net-load as more renewables are integrated into the grid

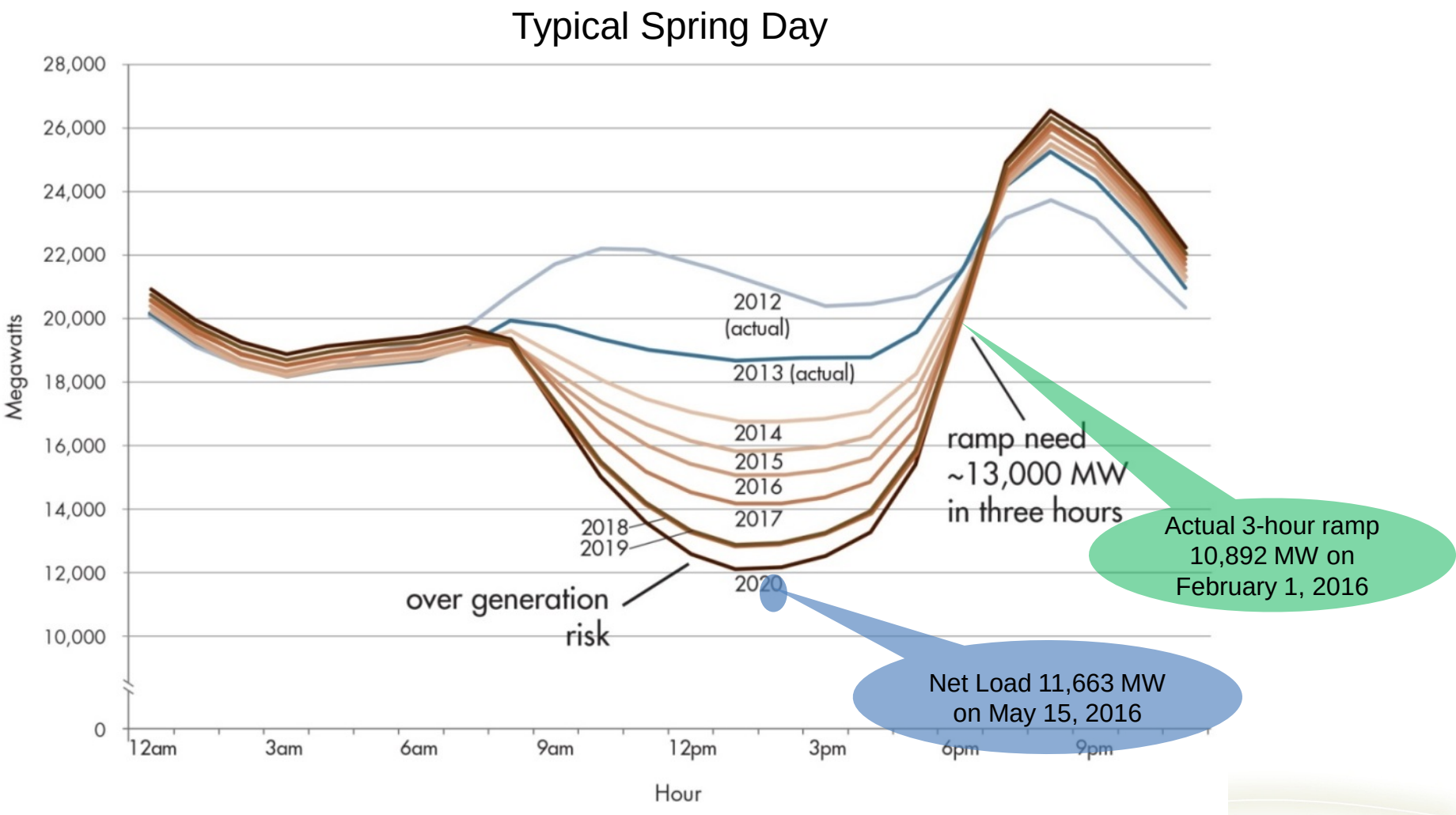

On May 15, 2016 the net-load dropped to 11,663 MW, which is four years ahead of the original "duck curve" estimate

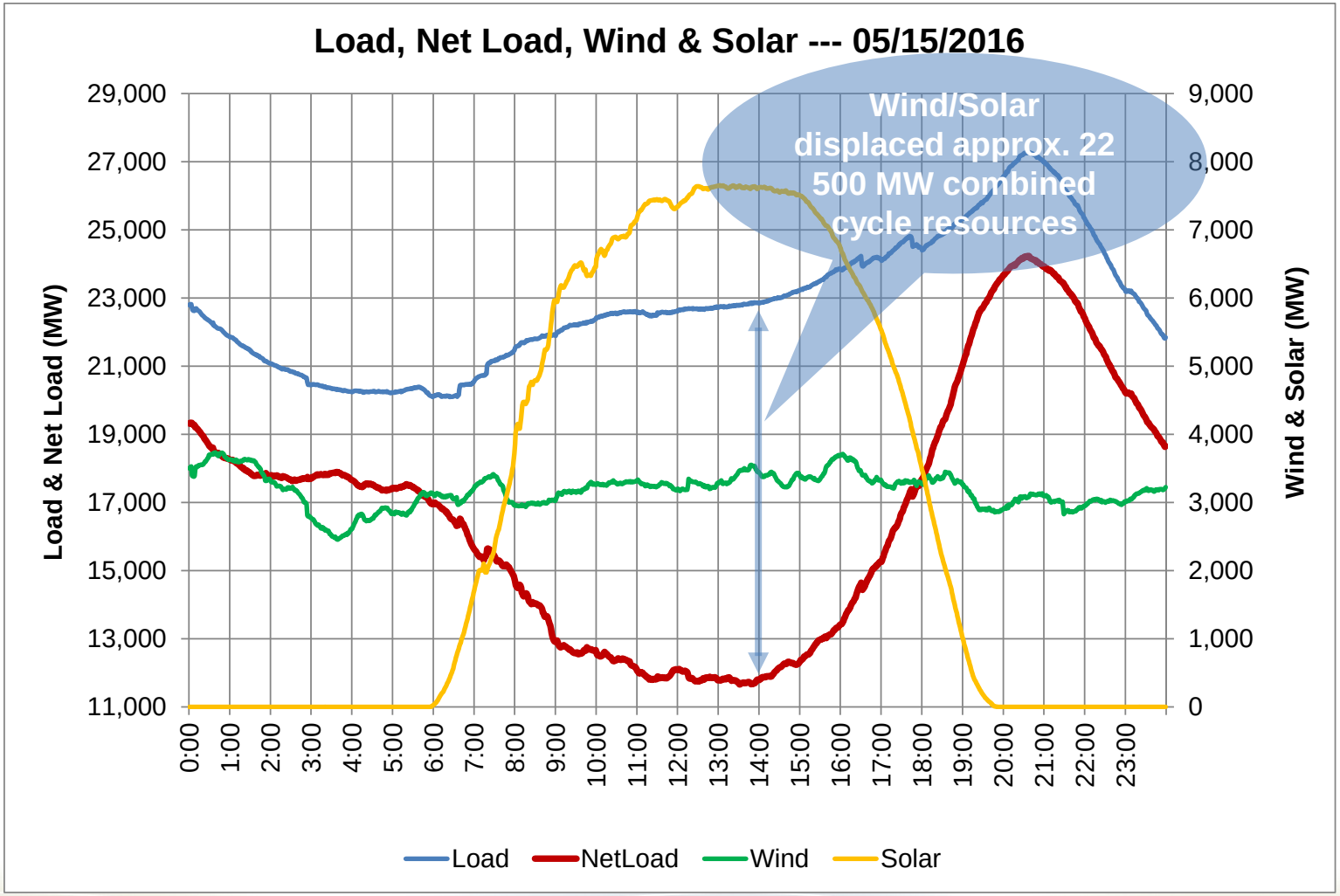

Wind and solar production vs. CPS1 --- 5/15/2016

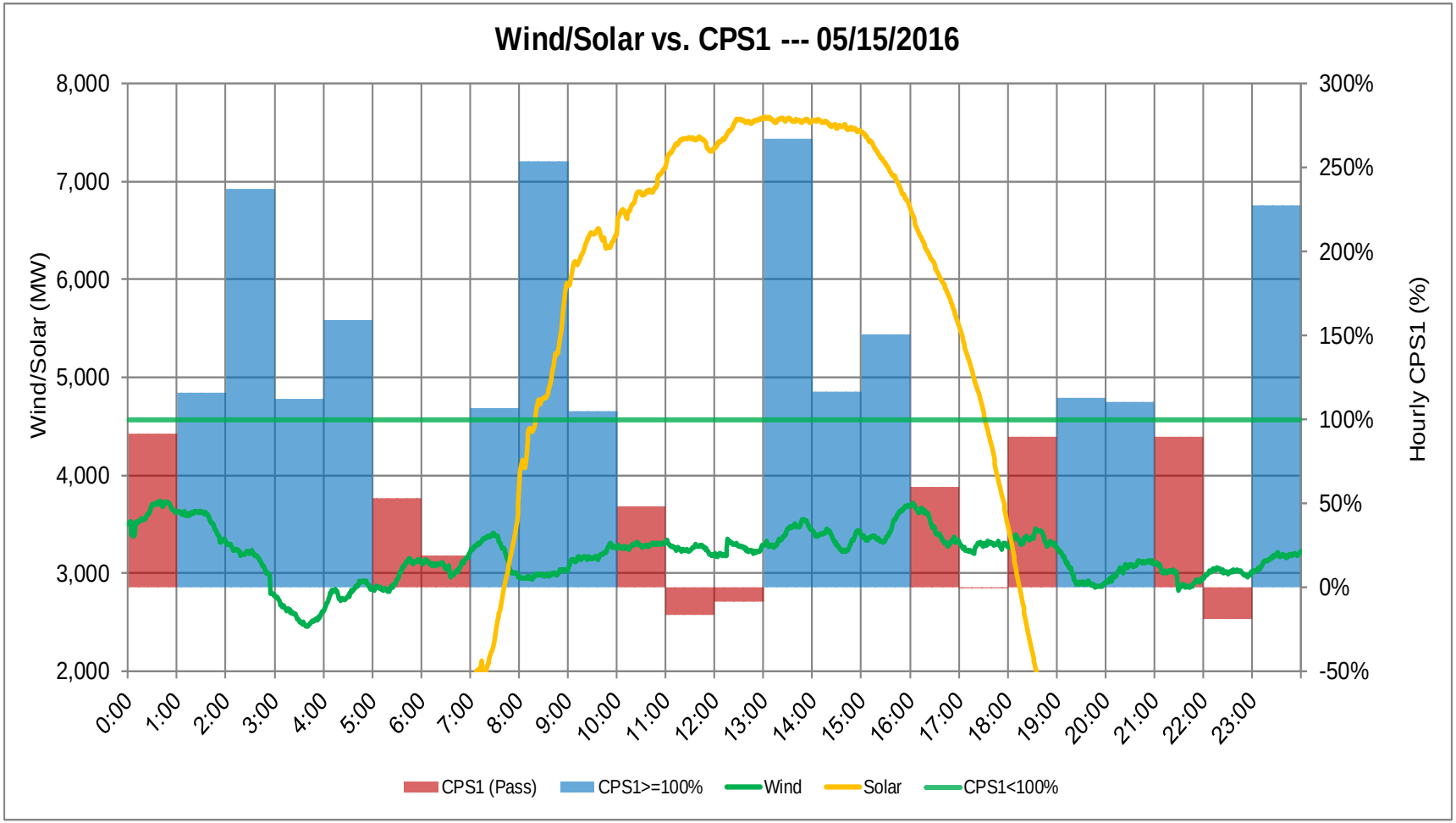

The CPS1 hourly score was below 100% for 11 hours, however the overall CPS1 score for the day was 103%

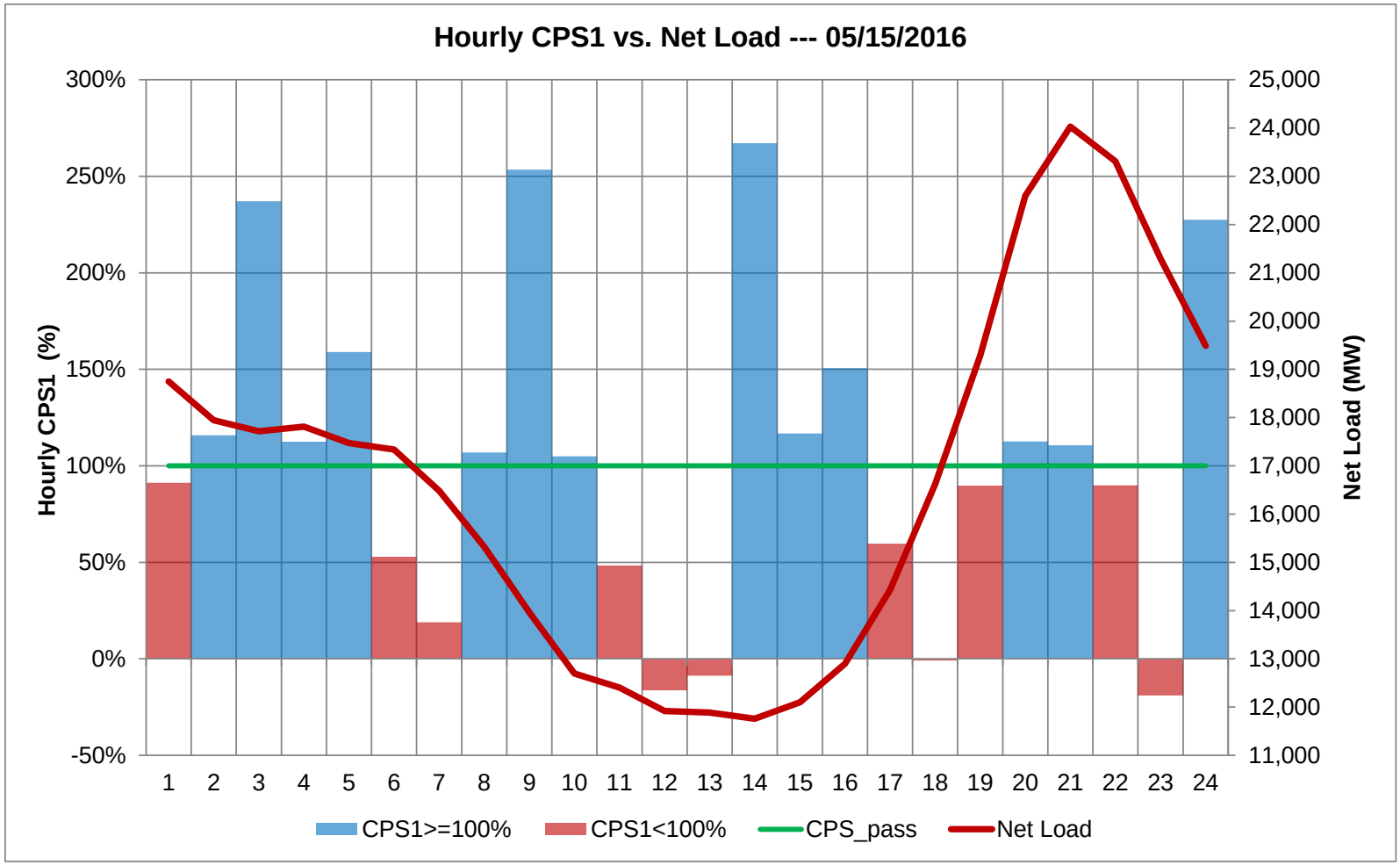

Resource breakdown --- 5/15/2016

- Max renewable curtailed 811 MW during HE10
- Wind/Solar 49% of Load
- RPS 56% of Load
- Non Carbon resources 69% of Load
- Max wind & Solar 11,177 MW
- Minimum Net Load 11,663 MW
- Max 3-hour upward ramp was 8,411 MW
- Max 1-hour upward ramp was 3,572 MW

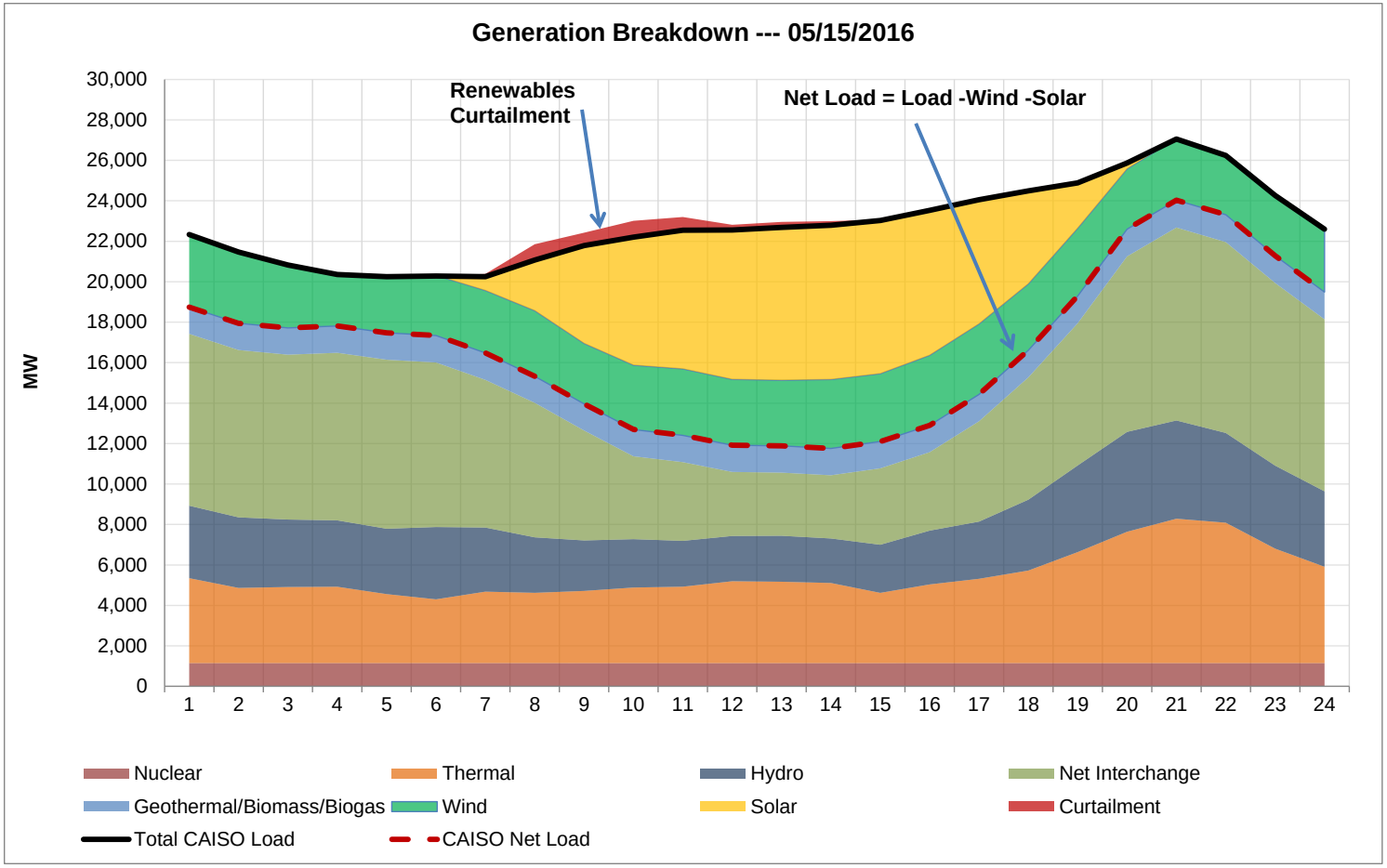

NERC
NORTH AMERICAN ELECTRIC RELIABILITY CORPORATION

NERC Resource Subcommittee: ERSWG Activities in support of Measures

Troy Blalock, PE
NERC RS Chairman
ERSWG
June 8 and 9, 2016

RELIABILITY | ACCOUNTABILITY




ERSWG

Ref Number	Title	ERS Recommendation	Ongoing Responsibility
1	Synch Inertia at Interconnection Level	Measure	RS & FWG
2	Initial Frequency Deviation	Measure	
3	Synch Inertia at BA Level	Measure	
4	Freq Response at Interconnection Level	Measure	
5	Real Time Inertial Model	Industry Practice	BA
6	Net Demand Ramping Variability	Measure	RAS
7	Reactive Capability on the System	Measure	PAS & SAMS
9	Overall System Reactive Performance	Industry Practice	EAS
10	System Strength	Industry Practice	PC

Measure 1

ERSWG Measure

1	Synch Inertia at Interconnection Level	Measure	

Data Collection

Reported by Interconnects and Bas				
	Measure 1&3			
Time Stamp in UTC	Total Interconnect inertia conribution, MVA*s	Interconnect Load, MW	Production from Non-Synch Gen, MW	Exports/Imports, MW
5/8/15 1:00	588244	32771.2		
5/8/15 1:15	582277	31480.0		
5/8/15 1:30	588244	30711.6		
5/8/15 1:45	588244	30740.7		

Periodicity:

- East 15 min
- West 1 min
- ERCOT and HQ 4 sec

Measure 2

ERSWG Measure

2	Initial Frequency Deviation	Measure

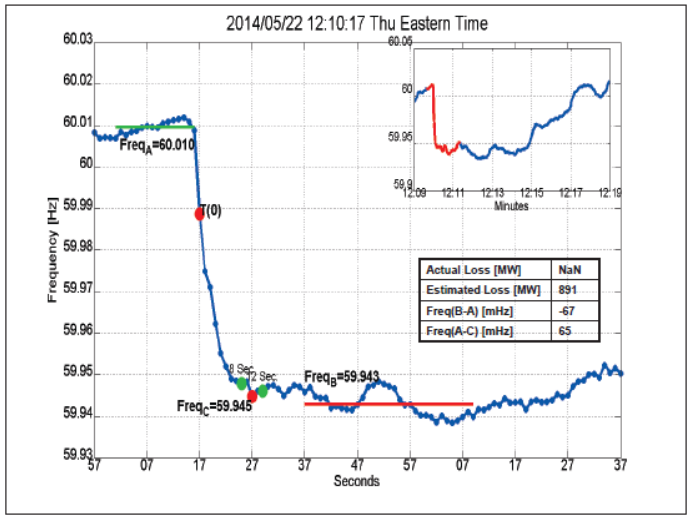

NERC anticipates using the Interconnection Inertia Data to calculate metrics post event.

Reported by Interconnects and Bas				
	Measure 1&3			
Time Stamp in UTC	Total Interconnect inertia conribution, MVA*s	Interconnect Load, MW	Production from Non-Synch Gen, MW	Exports/Imports, MW
5/8/15 1:00	588244	32771.2		
5/8/15 1:15	582277	31480.0		
5/8/15 1:30	588244	30711.6		
5/8/15 1:45	588244	30740.7		

Measure 3

ERSWG Measure

3	Synch Inertia at BA Level	Measure

Data Collection

Reported by Interconnects and Bas				
	Measure 1&3			
Time Stamp in UTC	Total Interconnect inertia conribution, MVA*s	Interconnect Load, MW	Production from Non-Synch Gen, MW	Exports/Imports, MW
5/8/15 1:00	588244	32771.2		
5/8/15 1:15	582277	31480.0		
5/8/15 1:30	588244	30711.6		
5/8/15 1:45	588244	30740.7		

NERC RS will reach out to BA' s that has or is expecting a large penetration of non-synchronous generation to work with their RC to submit data.

Measure 4

ERSWG Measure

4	Freq Response at Interconnection Level	Measure

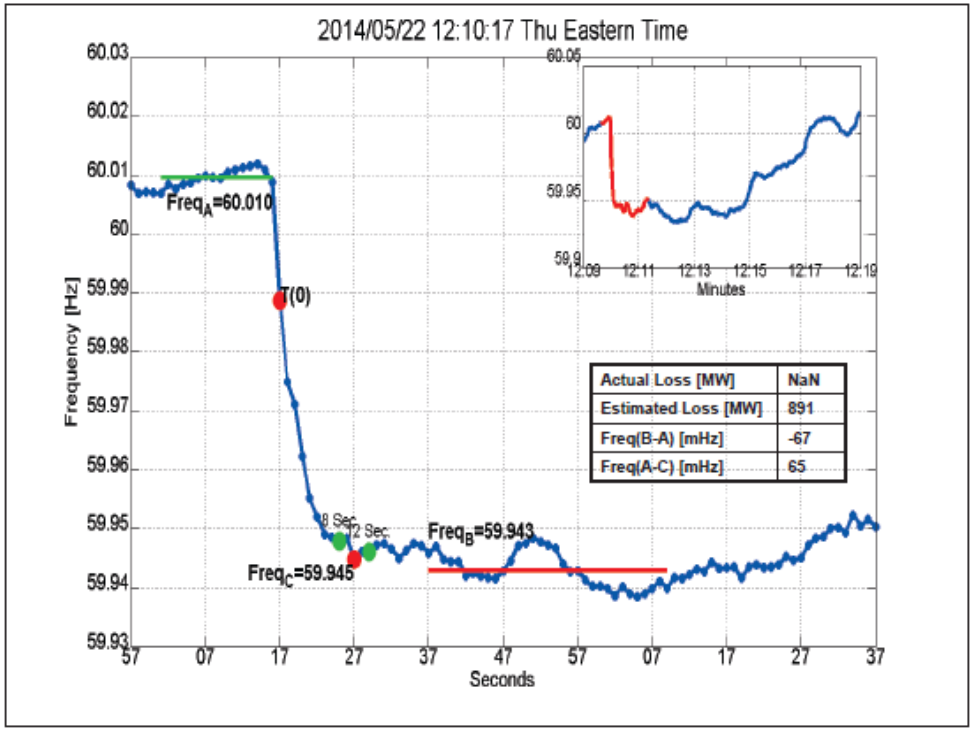

Quarterly, the RS selects events for BAL-003 as well as M-4 for all four interconnections

Measure 6

ERSWG Measure

6	Net Demand Ramping Variability	Measure

A BA CPS 1 hourly values can provide an indication of ramping challenges

Average of CPS1	BA Code																															
Hour of Day	[redacted]																															Grand Total
0.0	160.5	182.3	183.1	162.6	108.2	114.8	195.8	168.0	165.6	265.6	61.4	133.9	162.0	-47.6	120.6	182.4	138.2	174.3	69.4	140.1	223.8	138.6	72.3	178.1	155.9	209.9	13.5	114.0	73.5	171.3	195.8	135.6	143.4
1.0	207.5	182.8	185.1	158.7	185.9	156.9	175.6	196.7	193.4	197.5	199.8	146.4	152.3	136.2	112.9	178.1	128.8	194.2	177.2	188.8	210.9	204.3	220.4	196.3	168.6	188.1	113.9	164.0	133.4	174.5	168.9	153.4	173.4
2.0	197.6	169.0	128.9	176.7	164.1	168.6	150.7	188.2	178.7	182.8	173.2	186.2	152.9	122.5	136.8	163.8	148.2	131.7	60.3	166.4	190.6	187.9	178.5	194.4	149.3	195.1	166.3	150.1	140.1	180.2	111.6	144.3	163.0
3.0	185.8	157.3	173.7	169.6	152.6	161.9	149.4	194.1	178.9	179.7	175.1	63.3	186.9	176.5	106.0	198.9	116.5	186.0	217.4	168.5	139.4	139.2	189.4	199.3	119.9	218.8	221.2	152.0	167.7	181.8	162.1	136.8	165.3
4.0	231.8	176.7	194.1	163.9	151.2	175.3	195.8	195.1	147.9	177.5	126.7	188.3	162.3	69.9	164.0	209.6	147.0	183.1	34.7	168.4	289.6	112.7	187.2	197.7	142.7	202.8	56.3	157.0	153.5	135.1	125.1	149.3	164.9
5.0	208.6	181.4	188.7	189.1	166.7	187.2	173.9	194.1	181.8	209.0	136.2	169.7	186.5	122.7	134.4	205.2	163.3	175.6	147.9	187.2	310.0	232.3	190.9	197.7	173.6	193.2	139.9	164.8	157.5	172.9	156.8	171.0	181.0
6.0	206.8	171.4	69.3	111.8	104.9	147.9	-5.7	194.1	169.4	215.4	92.0	195.3	175.2	-139.9	93.5	169.2	103.3	170.8	-47.3	46.8	275.1	-6.9	205.8	192.5	126.5	214.2	66.9	135.3	124.4	173.9	118.4	94.0	127.8
7.0	222.8	166.2	55.3	203.3	171.4	140.2	136.5	200.2	193.5	183.3	292.4	153.0	183.0	-78.1	203.6	171.9	119.9	175.2	132.7	120.7	-173.6	38.9	194.2	213.1	135.2	192.4	75.5	116.6	26.8	180.3	94.5	117.9	136.3
8.0	173.8	158.9	50.8	82.9	289.4	165.5	140.6	169.2	134.0	156.7	126.4	-108.8	150.2	262.1	67.0	81.8	132.5	162.0	239.9	165.4	-136.1	200.2	128.8	155.4	58.9	201.4	241.6	86.4	138.9	151.4	162.1	108.5	131.4
9.0	184.6	237.2	184.5	89.5	253.4	145.5	171.6	191.7	201.1	179.4	91.6	117.4	157.6	247.4	145.0	101.3	133.5	171.8	191.5	180.4	-64.0	165.9	148.3	163.6	114.7	195.6	336.1	177.9	242.5	72.7	249.5	150.7	165.8
10.0	203.3	195.3	152.0	155.0	262.2	170.9	147.6	182.0	167.9	189.2	72.7	82.8	121.7	160.8	233.9	156.0	124.3	165.5	181.3	182.6	83.6	134.2	162.0	193.8	113.8	226.4	200.7	121.7	167.6	178.0	172.4	137.7	162.0
11.0	192.4	161.0	179.8	175.3	241.2	151.7	146.7	165.2	164.3	206.2	132.1	148.4	161.3	159.9	89.6	155.4	141.9	179.7	217.0	175.2	247.0	253.9	175.6	194.1	187.9	201.3	186.9	128.9	336.7	110.7	139.9	148.4	175.8
12.0	187.5	174.8	135.7	147.8	261.2	170.9	173.8	147.9	178.1	200.9	76.7	156.2	175.8	164.6	104.8	164.3	160.1	182.5	209.5	188.8	208.6	245.0	189.6	190.7	165.2	213.2	88.1	163.9	152.3	169.5	123.7	160.4	168.8
13.0	211.0	155.2	163.2	158.7	252.2	159.1	121.9	130.5	147.1	183.7	136.8	128.4	175.4	152.2	151.3	172.0	146.6	173.0	127.5	177.9	92.8	94.3	128.3	181.6	185.6	199.3	287.5	163.5	221.8	102.9	154.8	152.1	163.0
14.0	171.9	168.5	82.7	129.9	237.4	161.1	97.5	119.2	22.2	146.4	156.1	143.8	169.6	198.2	52.1	143.9	116.5	179.6	167.9	150.7	232.4	124.0	233.0	153.5	142.7	235.1	272.6	102.7	142.5	-118.6	214.8	125.5	145.6
15.0	192.2	169.3	20.9	161.8	244.6	133.0	96.7	203.9	143.8	151.3	154.0	13.7	205.0	225.9	133.2	163.6	131.3	163.3	164.7	166.3	319.6	178.5	196.9	200.3	184.4	217.5	69.0	150.2	213.6	157.3	170.5	143.0	163.7
16.0	186.6	171.2	155.6	141.6	241.7	148.2	105.6	176.9	166.5	182.7	191.8	82.2	177.0	187.8	177.7	156.9	108.5	170.3	199.6	156.9	210.6	93.8	138.4	212.5	140.7	245.6	148.9	132.0	253.7	188.6	128.9	130.2	165.1
17.0	186.3	159.7	114.7	184.5	195.0	182.8	156.9	182.8	181.3	183.4	139.7	170.3	165.3	198.3	186.1	177.7	125.7	195.8	179.9	180.0	176.3	167.1	215.1	208.7	145.1	210.4	70.8	107.9	165.0	180.2	141.8	147.2	167.9
18.0	196.7	159.4	141.0	217.0	138.9	178.1	174.7	117.2	168.3	181.2	147.5	118.2	162.3	206.8	168.9	194.6	148.0	180.9	121.1	162.9	110.1	131.4	191.2	208.6	141.1	223.5	277.9	167.2	135.3	153.3	134.3	149.8	166.9
19.0	193.7	169.8	191.4	148.3	194.2	176.4	178.9	171.9	167.9	173.8	178.9	161.8	172.3	187.6	170.7	184.3	161.0	173.9	162.3	169.1	226.5	168.0	186.6	203.4	165.2	181.0	86.8	146.5	154.1	177.5	145.3	154.9	171.6
20.0	202.6	107.5	138.3	163.4	212.6	173.5	105.9	123.1	160.2	177.4	114.5	144.7	205.5	155.9	220.5	125.8	154.1	193.9	63.3	170.6	237.3	58.8	162.2	196.4	167.2	211.1	107.0	41.2	191.2	178.6	137.8	141.7	156.9
21.0	156.4	114.6	302.7	161.8	71.9	139.8	272.0	-99.5	145.1	236.1	35.1	20.7	174.5	204.0	13.3	219.0	38.5	175.4	244.7	137.5	-394.3	-8.6	227.2	234.8	126.3	231.4	-85.1	155.9	119.6	172.7	205.1	99.9	117.6
22.0	224.9	183.0	135.4	168.0	69.7	115.6	83.6	146.2	117.1	160.7	81.3	129.6	147.7	184.6	120.5	186.9	101.8	163.9	153.7	140.9	-110.0	72.8	220.5	223.6	123.6	195.7	112.8	95.2	28.7	149.6	111.1	103.8	128.9
23.0	191.8	190.6	87.0	99.6	150.2	97.4	73.7	145.8	151.4	207.9	90.6	120.2	162.4	208.3	146.3	177.0	90.9	153.3	322.7	150.2	194.3	114.0	193.1	200.1	83.3	213.5	59.9	117.3	134.8	159.4	107.9	107.4	142.6
Grand Tota	**194.9**	**169.3**	**142.2**	**155.0**	**188.4**	**155.1**	**142.5**	**158.5**	**159.4**	**188.7**	**132.6**	**119.4**	**168.5**	**144.3**	**135.5**	**168.3**	**128.4**	**174.0**	**158.7**	**160.1**	**129.2**	**135.0**	**180.7**	**195.4**	**142.4**	**209.0**	**138.1**	**133.8**	**157.3**	**148.1**	**151.4**	**136.0**	**156.2**

Keeping Our Eye on the Ball

Queued Generation Fuel Mix – Requested Capacity Rights (December 31, 2015)

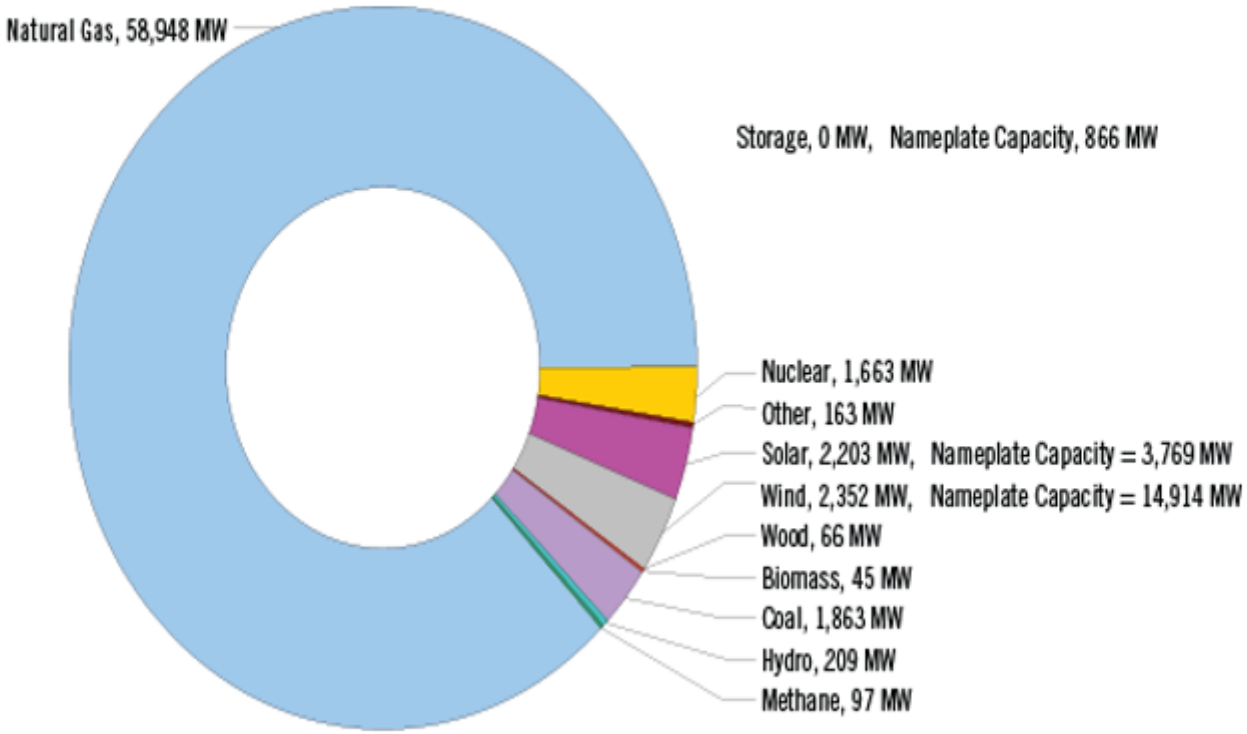

Questions

Voltage and Reactive Sub-area Concept Paper

ERSWG Voltage and Reactive Subgroup

Voltage regulation and reactive resource management is a critical part of planning and operating the Bulk Electric System (BES). Maintaining adequate voltage profiles across the BES both pre and post contingency is a function of the reactive resources available and their utilization. The ability to control the production and absorption of reactive power often becomes the driving force behind studying and operating the BES over a wide range of conditions, especially in those areas where weak transmission systems supply load and generation or the transmission network can be subjected to heavy power transfers.

So while engineers must consider voltage and reactive performance over a wide range of system conditions there is a significant justification for focusing the analysis on much smaller sub-areas of the BES. Due to the lack of transportability of reactive resources on the BES, planners and operators need to consider defining sub-areas of the BES within their footprint that have their own unique set of voltage / reactive performance issues which only lend themselves to local resources and remedial actions. The BES varies widely from area to area based on the specific topology and electrical characteristics. There has been a long held belief in many industry sectors that reactive resource reserves are the key to maintaining a robust system. While at a high level this is true, the reality is if those abundant reactive reserves are not electrically close to where they are needed, they will be totally ineffective in managing voltages on the system.

Therefore the Planning Coordinator and Transmission Planner, based on their knowledge of the unique characteristics of their system, should collaboratively develop criteria for defining sub-areas within their footprint. They should also include the Reliability Coordinator and Transmission Operator who may have useful insight into sub-area characteristics based on operational experience. Logical sub-areas can and most likely will cross company boundaries and jurisdictional boundaries; they should be developed solely on electrical characteristics and reactive performance.

Consider the inherent difference between a typical large urban area and that of a typical large rural area in such variables as load level and load power factor (LPF), various overhead and underground transmission network configurations, dynamic and static reactive resources and, the appropriate minimum and maximum voltage limits to adhere to. While these two areas may be within the same RC/BA/PC footprint the voltage and reactive performance of each can vary significantly. That difference will drive both the criteria and the type of planning studies required to meet the objective of developing a robust reliable system. Similarly those same differences may impact the way the real-time operations are managed. The determination of

appropriate sub-areas within the larger footprint becomes the primary and most critical first step in planning and operating the BES. Considerations in defining sub-areas of the system are:

- Reactive performance within the footprint both pre and post contingency
    - Insufficient reactive compensation in a single area can impact or cascade to neighboring areas and affect overall BES operation
    - The system can reach a state where even though voltages appear adequate, most available reactive resources are exhausted and the next contingency can degrade voltages and reactive performance pushing the BES quickly into unacceptable performance
    - The loss of high voltage BES facilities can load remaining facilities more heavily and resulting in significantly increased losses which will negatively impact the voltage profile and reactive resources
    - Outages of major reactive resources not only removes the reactive capability but can also result in large MW swings and increased losses which will negatively impact the voltage profile and reactive resources
- Real power import, export, and flow-through characteristics, e.g. large power transfers within or between sub-sets can significantly increase reactive power losses which will negatively impact the voltage profile and reactive resources
- Transmission topology and characteristic, e.g., high surge impedance loading where real power transfers can reach a point where reactive consumption of the transmission system exceeds available reactive supply which will negatively impact the voltage profile
- Charging from cables or long overhead lines during light load periods where these facilities may produce voltages so high that leading reactive capability is exhausted and circuits must be opened to reduce voltages
- Types of reactive resources available which will have different lead/lag characteristics:
    - Synchronous vs. nonsynchronous/inverter based resources,
    - Static devices, i.e., shunt capacitors, reactors, etc,
    - Dynamic devices, i.e., SVCs, STATCOMs, DVARS, etc,
    - HVDC terminals, such as Voltage Source Converters that can supply reactive capability,
    - Line compensation that can be switched in and out such as series compensation.
- Real and reactive load distribution, (while this is the distribution area of the system, real load and LPF can have both a positive and negative impact on the BES and that contribution must be accounted for).

Once appropriate ~~subarea~~sub-areas have been defined, the planners and operators must ensure compliance with all applicable NERC standards. More stringent regional or local criteria may also be utilized.~~This does not mean that more stringent regional or local criteria may also be utilized~~. The planners and operators would then need to develop appropriate sufficiency measures applicable to each unique sub-area. Sufficiency measures can and most likely will differ by sub-area based on the uniqueness of each. As an example a large urban area that has limited reactive resources and routinely imports large amounts of real power may have a more stringent min/max voltage limits. It may further have certain online dynamic reactive resources

and load power factor requirements. A rural sub-area with relatively light real power loads and long high impedance overhead lines may have more relaxed min/max voltage limits and may need to maintain a specific reactive reserve. The point to reinforce is sufficiency requirements by sub-area need to fit the reactive characteristics of the specific sub-area in order to ensure reliability is maintained and a certain degree of robustness is built into the system. Sufficiency measures therefore are not one size fits all.

In a general sense the ~~subarea~~sub-areas that are defined should be somewhat autonomous relative to their reactive and voltage performance for N-1-1 conditions. This construct negates one ~~subarea~~sub-area relying too heavily on adjacent ~~subarea~~sub-areas for reactive support thereby increasing the chance of a cascading event. This also inherently builds in reactive margin so that in real-time where N-k events may occur there is enough robustness to prevent a widespread event from occurring. The end result is to plan and operate each sub-area so that the reliability of the broader BES is maintained. There are numerous tried and true methods of studying, planning, building and operating the BES. At a high level those aspects are addressed in the accompanying NERC Reliability Guideline: Reactive Power Planning and Operations.

Synchronous inertia sufficiency guideline

The purpose of this guideline is to examine the system capability under low inertia condition to arrest frequency decay and avoid involuntary under-frequency load shedding after large generator trip based on each region's existing primary frequency control capabilities and practices. Once system inertia, based on historical data (Measure 1&3) starts approaching a critical value, as described in this document, each region should consider revising the existing frequency control practices and capabilities and introduce additional measures to ensure system frequency is arrested above the prevailing first stage of involuntary under-frequency load shedding after the largest contingency.

Keeping a minimum level of synchronous inertia may not be the most efficient way to operate the grid. Out of market unit commitment for inertia may have adverse effect on market prices. Generators committed for inertia will operate at least at their minimum stable production level affecting energy prices and potentially causing curtailments of non-synchronous generation. Thus, it is recommended that other frequency control measures to address decreasing inertia trend are implemented. Several examples are provided below:

1. In ERCOT Load Resources with under frequency relays are providing a portion of Responsive Reserve Service (Ancillary Service with a function to arrest, stabilize, and recover frequency after an event). These Load Resources trip offline, providing full response within 0.5 second[1] after system frequency falls at or below 59.7 Hz. This capability can be viewed as fast primary frequency response. This type of response, i.e. response to a frequency trigger, is very efficient at arresting frequency after an event. Battery storage can be used for the same purpose, i.e. to provide full response very quickly once the system frequency reaches a certain threshold. Time of response and frequency triggers can be optimized to meet particular system needs.

2. Hydro Quebec has adopted a different approach to address low synchronous inertia concern. In 2006 they have updated their grid code with specific requirement for emulated (or synthetic) inertia response requirement for wind power plants (WPPs). WPP frequency control must reduce large, short-term frequency deviations at least as much as the inertial response of a conventional generator whose inertia constant equals 3.5 s does [Ref to GC document]. Simulations have shown that this target performance is met, for instance, when the wind turbine generators vary their active power dynamically and rapidly by about 5% for 10 s when a large frequency deviation occurs. This requirement is still in effect. Synthetic inertia from wind generation is another means of very fast active power injection that can help address high initial rate of change of frequency (RoCoF) after a contingency.

[1] Underfrequency relays at the participating load resources in ERCOT have a time delay set at 0.33 seconds (or 20 cycles). The timer will start after triggering frequency is reached and will reset if the system frequency increases above triggering frequency during that period. This delay is introduced to avoid nuisance tripping, but the time can potentially be reduced. Additionally, about 0.17 second (or 10 cycles) is necessary for a breaker to open and disconnect a load resource. This time delay is based on physical capabilities of a breaker.

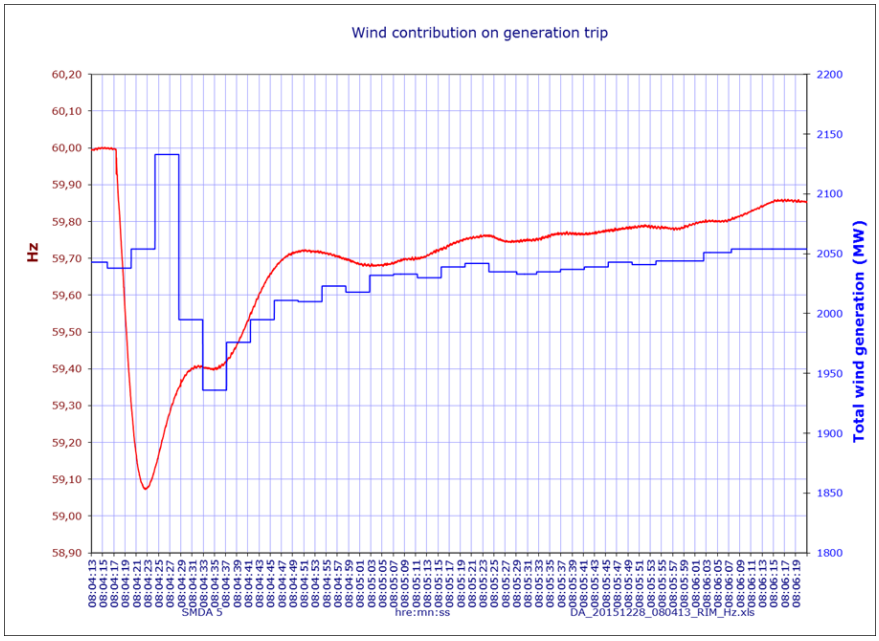

Figure 1: Synthetic inertia response from wind generators in Hydro Quebec after generator trip event.

The methodology for determining critical synchronous inertia under existing frequency control practices

The flowchart for the proposed methodology is shown in Figure 2.

1. Calculate system inertia for every hour in a year in MVA*seconds. This is calculated as a sum of individual inertial contributions from all online generators. Find the lowest inertia instance in a year. This is basically covered under Measures 1& 3 developed in ERSTF Framework Report.
2. At that lowest inertia condition, calculate Rate of Change of Frequency (RoCoF), Hz/s based on the Interconnection's resource contingency criteria (RCC), which is the largest identified simultaneous category C (N-2) event, except for the Eastern Interconnection, which uses the largest event in the last 10 years. This is a part of the Measure 2 calculation.
3. ~~Assume there are no other means of frequency response. This is not a realistic assumption, but the purpose is, with~~ With the RoCoF from the previous step, ~~to~~ calculate how long it takes to reach the first stage of under frequency load shedding (UFLS) after the RCC event. If this time is sufficient (e.g. ~~3~~1-1.5 seconds[2]) for the existing means of frequency response (fast frequency response,

Commented [MJ1]: There is no requirement in BAL-003 for the systems to remain above UFLS first stage for 2 unit trips… Should there be another criteria?

[2] The purpose here is to make sure the RoCoF does not result in UFLF within 1-1.5 s, i.e. before frequency response (fast and/or primary) can become effective. Times when fast and primary frequency response becomes affective may vary for different systems and different synchronous inertia conditions. Those could be verified from historic event analysis and dynamic simulations. For example in ERCOT Load Resources with under frequency relays are

primary frequency response) to start deploying and to help arrest frequency above the first stage of UFLS, then this RoCoF is not critical.

4. Gradually, scale down the inertia found in step 1, in steps of, say 10%. Repeat steps 2 and 3, until the resulting RoCoF is such that a Prevailing UFLS First Step is reached before the primary frequency response can become effective (1-1.5 second)[3]. Return to the last inertia value that still is sufficient. This is the first approximation of the critical system inertia.

   Note: *The Eastern Interconnection 59.5 Hz UFLS set point listed in BAL-003-1.1 is a compromise value set midway between the stable frequency minimum established in PRC-006-1 (59.3 Hz) and the local protection UFLS setting of 59.7 Hz used in Florida and Manitoba. Since it's possible that 59.7 Hz will lead to UFLS in Florida and Manitoba, this frequency threshold should be used for the calculation steps 1-4 above.*

providing a portion of Responsive Reserve Service (Ancillary Service with a function to arrest, stabilize, and recover frequency after an event). These load resources trip offline within 0.5 second after system frequency falls at or below 59.7 Hz. Therefore, in ERCOT, the RoCoF that leads to 59.7 Hz within few hundred milliseconds after an event and the then first stage of UFLS within the next 0.5 second, becomes important. If UFLS is not reached within this time frame, Load Resources would trip and would be very efficient at arresting frequency above the UFLS threshold.

[3] ~~The purpose here is to find the RoCoF resulting in UFLF within 1-1.5 s, i.e. before primary frequency response can become effective. For example in ERCOT Load Resources with under frequency relays are providing a portion of Responsive Reserve Service (Ancillary Service with a function to arrest, stabilize, and recover frequency after an event). These load resources trip offline within 0.5 second after system frequency falls at or below 59.7 Hz. Therefore, in ERCOT, the RoCoF that leads to 59.7 Hz within few hundred milliseconds after an event and the then first stage of UFLS within the next 0.5 second, becomes important. If UFLS is not reached within this time frame, Load Resources would trip and would be very efficient at arresting frequency above the UFLS threshold.~~

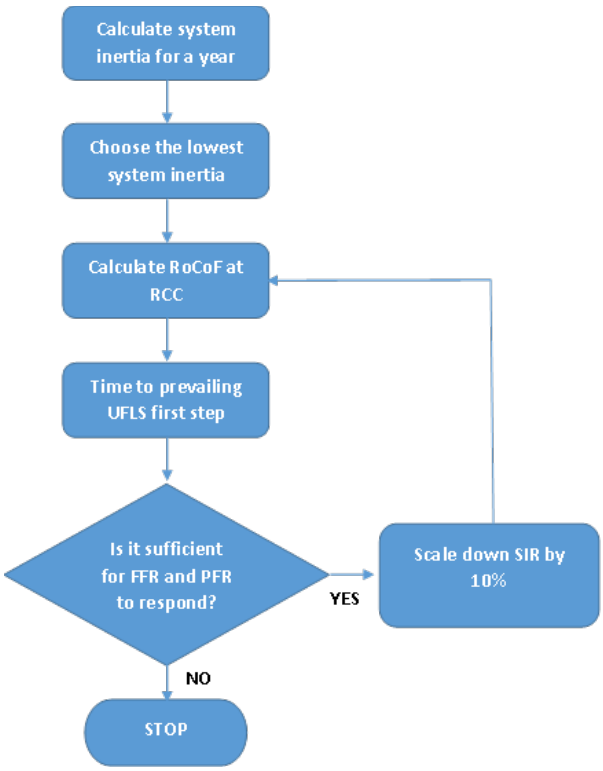

Figure 2: Top-down Approach to determine critical synchronous inertia

5. The system inertia value determined above is a **theoretical** top down approximation of critical inertia. It is possible that in reality there is always more synchronous generation online at any given time due to other considerations. In order to obtain a more accurate value, one can use bottom up approach. Start with minimum synchronous inertia that will always be online for a system. For example:
    i. Are there any reliability-must-run units (e.g. for voltage support or transmission reliability) that would need to be online in these conditions?
    ii. Are there any behind-the-meter industrial generators that are always online?
    iii. Are there nuclear units?
    iv. How many are synchronous generators online to provide required reserves, what are those generators (what are their typical inertia values)? Here it is important to consider if there are any physical limitations or regulatory restrictions on how much a single resource can or is allowed to contribute towards a reserve requirement. In ERCOT, for example, a generator is not allowed (by protocols) to offer more than 20% of its high sustainable limit

towards Responsive Reserve Service[4]. Calculate the total inertia contribution for all these "must run" units which need to be online to contribute to reliability, capacity or AS requirement.

6. Compare the inertia calculated in step 5 and the approximated critical inertia in step 4.
7. If Inertia from step 5 is higher or equal to the inertia in step 4, then the system will have sufficient synchronous inertia at all times, unless
    i. Any operations principles of the "must run" units change.
    ii. Reserve requirements decrease.
    iii. Contribution from a single resource towards any of the online reserve requirement changes.
    iv. New reserves are introduced or entry of new resources (not providing synchronous inertia) into Ancillary Services market becomes possible.
8. If inertia from step 5 is lower than one in step 4, then starting from the unit commitment and total "must-run" inertia value obtained in step 5 bring additional synchronous units online one by one, based on unit merit order. Stop once the total system inertia value is close to the critical value determined in step 4.

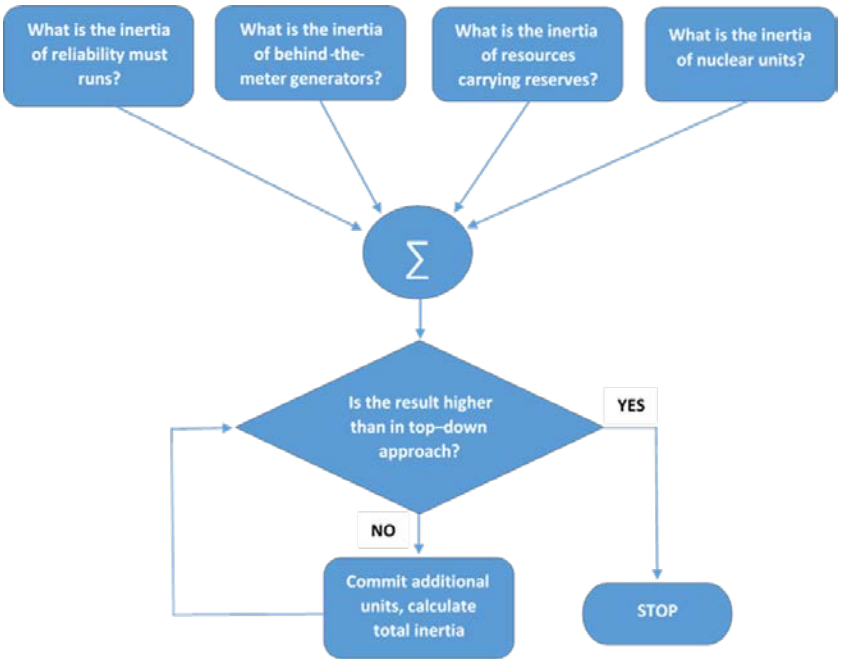

[4] This is because with 5% governor droop setting a generator is not able to provide more than 20% of its capacity in response to system frequency change of 0.6 Hz (i.e. from 60 to 59.4 Hz, with 0.1 Hz margin above first stage of UFLS).

Figure 2: Bottom-up Approach to verify minimum sufficient synchronous inertia determined via top-down approach

9. The result from step 8 can then be verified with dynamic simulations, using unit commitment from step 8 and simulating an RCC event. Since the above calculation does not take into account load damping and primary frequency response, it's possible that the actual, critical synchronous inertia value is slightly lower than this theoretical estimate. Note, however, that load damping and governor response do not significantly affect RoCoF in the first seconds of an event.

Once critical inertia value is identified, actual synchronous inertia of the system (Measure 1) has to be monitored against this value. However, is important to start planning ahead of time rather than waiting for synchronous inertia to reach critical value. For the systems that are nearing critical inertia value it would be practical to start forecasting future inertial conditions.

Commented [MJ2]: Here we can refer to the Framework report of have a section is this report detailing different methodologies for future inertia predictions…

As the synchronous inertia is approaching critical value, frequency control measures need to be revised and additional means of fast frequency support (e.g. from load resources, storage, synthetic inertia from wind turbines) put in place.

Note that fast frequency response may also be introduced to address other issues such as resource adequacy, need for flexibility and to improve energy market efficiency, i.e. to make generation resources available for energy production while allowing other resources, e.g. load or storage, provide frequency reserves. In this case, minimum sufficient synchronous inertia needs to be revised by repeating steps 1-9 and including fast frequency response characteristics into the analysis.

Case Study: Calculation of Critical inertia in ERCOT

This calculation example follows the same process as the sufficiency guideline above

1. Calculate system inertia for every hour in a year in MVA*seconds. Figure below shows box plots for system inertia in ERCOT.[5] Minimum inertia in each year and supporting data for the wind penetration record in each year are shown in the table blow.

[5] Note this values are somewhat higher than shown in the NERC ERSTF Framework Report. This is due to different accounting of inertia contribution from Private Use Networks (PUN). Private Use Network is an electric network connected to the ERCOT Transmission Grid that contains Load that is not directly metered by ERCOT (i.e., Load that is typically netted with internal generation). Previously PUN generation was only considered online if PUN net-production was above 5 MW, however, in reality, PUN generation can be online and producing power, while exporting 0 MW into ERCOT. In this situation PUN generation is still synchronously interconnected with ERCOT grid and will provide inertia during contingency events. After recognizing this PUN generators with gross-production above 5 MW were included in total system inertia calculation as shown in the box plots below.

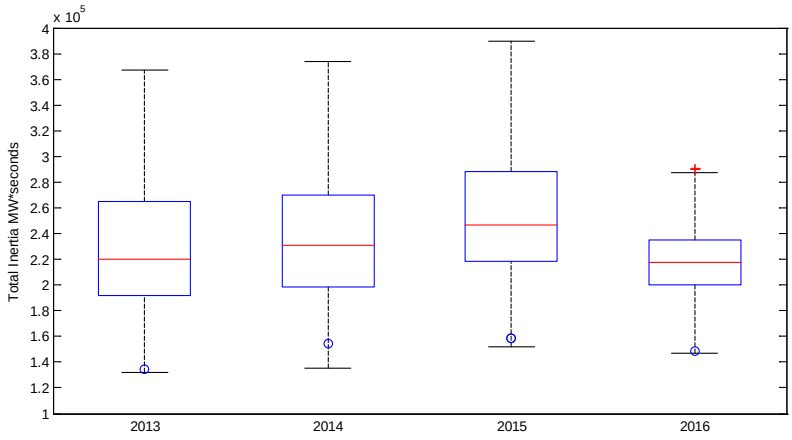

Fig. 5. Boxplot of the system inertia from 01/01/2013 to 3/31/2016

Table 3. Lowest inertia in different year (GW·s)

2013	**2014**	**2015**	**2016**
132	135	152	147

1.

Table 4. Wind generation power and load demand at the time of record of each year

	2013	**2014**	**2015**	**2016**
	3/9 3:15 am	11/3 2:28:56 am	12/20 3:05 am	3/23 1:10 am
Installed Capacity (P_{wind_inst}), MW	10,570	12,527	16,170	16,547
P_{wind}/P_{load}	35.8%	39.93%	44.71%	48.28%
P_{wind}, MW	8,773	9,882	13,058	13,154
P_{wind}/P_{wind_inst}	83%	78%	81%	79%
Net Load, (P_{load}-P_{wind}), MW	15,716	14,868	16,150	14,091
Inertia, MW*seconds	134,196	154,599	158,970	148,798
Installed Capacity (P_{wind_inst}), MW	10,570	12,527	16,170	16,547

2. Minimum system inertia for the past three years in ERCOT reached 132 GWs in 2013. Using the expression below it is possible to calculate Rate of Change of Frequency based on ERCOT's RCC which is loss of two nuclear units with total capacity of 2750 MW.

$$RoCoF = \Delta P_{MW}/(2 * (KE_{min} - KE_{RCC}))*60 \quad [Hz/s]$$

At 132 GWs inertia, the RoCoF will be 0.69 Hz/s and it will take slightly over a second to get to the first stage of underfrequency load shedding at 59.3 Hz.

3. ERCOT has load resources with underfrequency relays providing up to 50% of Responsive Reserve Service requirement. These load resources will trip in 0.5 seconds after frequency reaches 59.7 Hz. With RoCoF as calculated above, 59.7 Hz[6] will be reached in 0.43 seconds after the event, which means load resources will trip in about 0.93 seconds after an event, and system frequency will be at about 59.35 Hz at the time and therefore will be arrested before involuntarily underfrequency load shedding.
4. Gradually scaling down system inertia and performing same analysis as in the previous step shows that at about 105 GW s of inertia 59.7 Hz is reached at 0.35 seconds and 59.3 Hz is reached at 0.85 second therefore this inertia value can be considered theoretical critical inertia for ERCOT considering current frequency control practices.
5. Following bottom up approach described in the previous section, we need to establish if, theoretically, system inertia can fall below the critical value found in step 4 or is there always sufficient inertia online from the generation units that are always online:
   i. Currently there are no reliability must run units in ERCOT.
   ii. Private Use Networks (PUN), see Table 2 detailing min and max of their inertia contribution for the past 3 years, minimum in the past 3 years was 31.5 GW·s.

Table 2. Inertia contribution from PUN

Year	Min inertia from PUN, GW·s	Max inertia from PUNs, GW·s
2013	31.5	53.7
2014	48	52
2015	36	58

   iii. At least 3 nuclear units are normally online with total inertia of at least 18.4 GW·s.
   iv. NERC IFRO requirement is currently 1130 MW, minimally this will be procured as Responsive Reserve Service (RRS) from generation. According to ERCOT Nodal Protocols, there is 20% limit on how much capacity a single resource can offer towards RRS. Thus, 1130 MW will be distributed between generators with total installed capacity of at least 5650 MW. Assuming total MVA of these generators as 5650/0.9=6278 MVA and H=4.97 seconds[7], the inertia contribution for generation resources providing RRS will be at least about 30 GW·s. If 1130 MW is provided by smallest qualified for RRS coal or gas-steam units, then the inertia contribution for generation resources providing RRS will be about

Commented [MJ3]: I plan to expand this analysis and show a range of inertia from resources providing Responsive Reserve Service based on unit type

[6] In reality the load resources are separated in two groups with trigger points at and slightly above 59.7 Hz to avoid frequency overshoot. The calculation shown in this section is therefore somewhat simplified and shows more pessimistic results than in reality.

[7] In 2014 about 68% of generation RRS was provided from Combined Cycle (CC) generation, in ERCOT average CC has inertia constant of 4.97 seconds on 600 MVA base

18 GWs. At the very minimum if RRS is provided by hydro units in synchronous condenser mode (to its full capacity) and the rest is provided by qualified and participating gas steam units with the lowest inertia then the inertial contribution from RRS resources would be 14 GWs

Note that neither PUNs nor nuclear units are qualified to provide RRS in ERCOT. Therefore there is no double counting of these units in "must run" inertia calculation.

We can assume that at the worst case, Regulation Reserve are carried by the same units that are providing RRS and no additional unit commitment will be necessary to provide Regulation.

If ERCOT system has sufficient non-synchronous, renewable generation to serve system load, then nuclear units, PUNs and units providing RRS will be the only ones supplying synchronous inertia to the system. Based on the considerations above, this total synchronous inertia will always be 64-80 GW·s, unless PUNs significantly change their operating strategies, e.g. due to frequent negative energy prices at nighttime during winter/spring.

6. Theoretical critical inertia obtained in step 4 is 105 GWs,
7. "Must run" units will only provide about 68-80 GWs of inertia, which is less than critical sufficient inertia of 105 GWs.
8. Currently due to low gas prices Combine Cycle units are displacing Coal units in unit commitment. To provide 25 GWs of inertial response additional 9 CC units (600 MVA, H=4.97s) would be required online.
9. Dynamic studies conducted in 2014 also showed that when the inertia of the ERCOT system is less than 100 GW·s, loss of two largest units will cause voltage oscillations and voltage control issues in the Panhandle area.

Note, however, that currently Combined Cycle units are running more often and not turning offline during low load hours. Typical Combined Cycle in ERCOT has higher inertia contribution compared to the same MVA coal unit. This is why ERCOT's inertia is trending up in 2015-2016 even though renewable generation share keeps growing.

Calculation of Critical inertia in WECC

WECC operates as set of island at certain times in a year. In this case each island's critical inertia needs to be monitored.

Commented [MJ4]: Can somebody contribute here describing the islands and how often the system is operating that way. What would be the largest N-2 contingency for each island?

Calculation of Critical inertia in EI

Should we study parts of EI system assuming only other parts are not contributing to system inertia and this way finding critical inertia for each area in isolation?

Commented [MJ5]: Could anyone elaborate this idea?

How should the issue of varying frequency throughout the system during an event be addressed?

Future projections of system inertia

This section will describe methodologies for projecting synchronous inertia conditions for the future years.

Monitoring and forecasting synchronous inertia in the day-ahead and real time~~, ERCOT example~~

As the operation of conventional generation resources and the continuous growth of wind and solar generation bring more uncertainties to how the grid is operated, there emerges is a need to monitor

system inertia in real-time and also to help operators to predict it for the near future. The system inertia will be added as key indicator for the system operating conditions alongside voltage and frequency.

Monitoring of synchronous inertia and frequency deviation based on Resource Contingency Criteria was recommended as Measure 5 by ERSTF.

ERCOT Tools to Monitor and Predict System Inertia

Inertia Monitoring Tool and Dashboard

In order to streamline monitoring and analysis of the system inertia as well as contribution by individual generation types, ERCOT staff set up various data points to calculate synchronous inertia once a minute[8] by resource type and system total.

Additionally a real time inertia dashboard was experimentally set up to monitor the inertia in real-time as shown in Fig. 12. The dashboard also shows last 24 hours inertia contributions by generator type WHY IS IT IMPORTANT TO MONITOR BY TYEP?

Fig. 6. A dashboard to monitor inertia in real-time

Inertia Prediction Tool

The system inertia can be predicted using the current operation plan (COP) information submitted by the generators to provide some foresight into what the actual condition will be. The probability

[8] Currently being updated to calculate every 4 seconds to align with Measure 1 and 2 data collection process recommended by ERSWG

distribution function of 3-hour-ahead inertia estimation error using COP data in 2015 is shown in Fig. 13 (a). This prediction will open up an opportunity for operators to evaluate the sufficiency of procured Responsive Reserves as well as recognize the risk for extremely low inertia condition ahead of time and prepare a mitigation plan if needed. The performance of 3-hour-ahead RRS estimation is evaluated in 2015, with 3.78% of time for under-estimation (3-hour-ahead RRS estimation is less than the actual RRS requirement) and 10.1% of time for over-estimation – see Fig. 13 (b). One example of under-estimation of the RRS requirement is depicted in Fig. 14. On Nov. 4 2015, the system lambda (the dot line) dropped below 10$/MWh in the earlier morning. In response to this, some generation units which submitted "online" status in COP ahead of time were eventually running offline in real time, which resulted in an under-estimation of the system inertia. When the energy price was recovered, the generation units came back online so that 3-hour-ahead estimation of the system inertia matched well with the actual system inertia after H600.

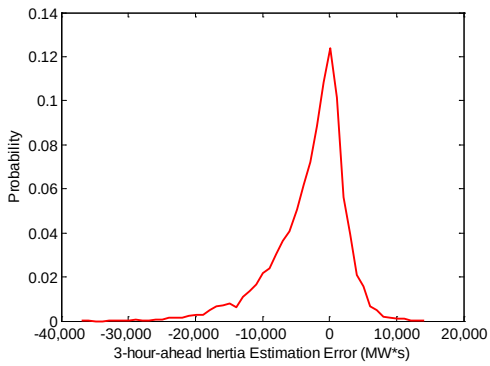

(a) error in 3-hour-ahead inertia estimation

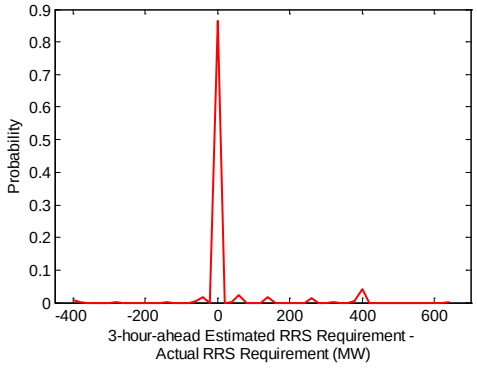

(b) error in 3-hour RRS requirement estimation

Fig. 13. 3-hour-ahead estimation error of inertia and RRS requirement

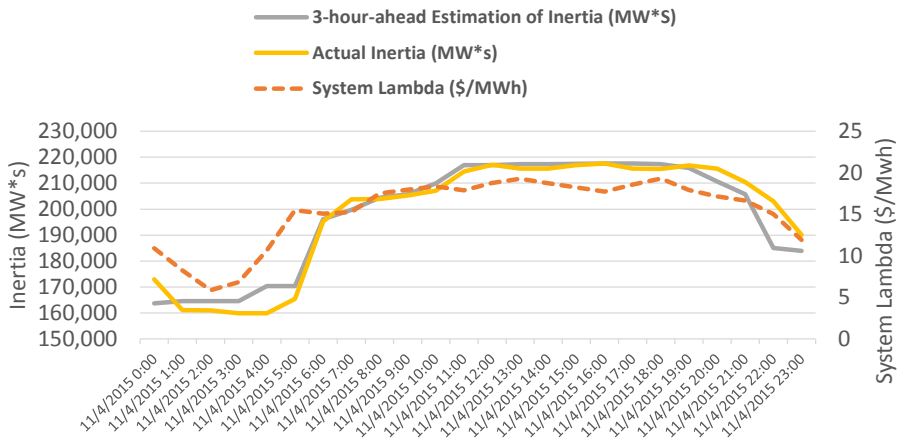

Fig. 14. System lambda and inertia on Nov. 4, 2015

DRAFT

Net Load ramping variability sufficiency guideline

The purpose of this guideline is to provide a methodology for BAs expecting high levels of changes in load patterns or non-dispatchable generation (e.g., renewable) mix that could change ramping needs over time, to examine their system ramping capabilities under various operating conditions, especially during light load conditions. Having sufficient ramping capability is now a critical component in planning and operating the bulk electric system, so it is prudent for BAs to evaluate their system to identify any increase in ramping needs. Ramping needs vary among BAs and depend on many factors such as the BA's existing fleet make-up, dispatch practices and, among other factors, expected renewable addition on a look ahead horizon. BAs should examine their fleet make-up to determine if changes are needed in their unit commitment practice to adequately balance generation and load in real-time and help meet their shared responsibility of supporting the interconnection steady state frequency control as well as meeting their frequency response obligation following a contingency. It is therefore important for BAs to identify any potential ramping deficiencies ahead of time to meet expected as well as unexpected intra hour and multiple hour ramping needs.

Insufficient ramping capability at the system level can impact neighboring BAs and affect overall BES operation when a ramp deficient BA leans on the interconnection. Leaning on the interconnection at times is permissible; however, a BA should not be leaning on the interconnection during the same hours each day. Knowing/Predicting the intra-hour ramping needs ahead of time assures adequate ramping capacity is available for dispatch in real-time.

For some BAs, balancing generation and load in real-time is becoming more of a challenge because of the significant increase in net-load ramping magnitude and variability. Any BA can get early indications whether it is prepared to integrate higher levels of renewables by evaluating its historical ramps against its real-time control performance standard (CPS1[1]) on a more granular level, such as hourly or daily. Keeping sufficient minimum levels of fast ramping resources may not be the most efficient way to address higher ramping needs. Exceptional dispatch or out-of-market unit commitment for faster ramping capability may unnecessarily raise the operating cost as generators committed for ramping capability through exceptional dispatches would have to be compensated for the services they provide.

Similarly, three-hour ramp capacity needs can be an indicator and are driven by BAs expecting higher penetration of solar generation. The BA must ensure adequate downward ramping capability is available as the solar production increases during sunrise and adequate upward ramping capability is available to meet the drop off in solar production during sunset.

BAs can also ensure adequate ramping capabilities are available when needed by recommending that renewable resources install smart inverters with the capability to provide

[1] CPS1 is a statistical measure of a BA's area control error (ACE) variability in combination with the interconnection frequency error from scheduled frequency. It measures the covariance between the ACE of a BA and the frequency deviation of the interconnection, which is equal to the sum of the ACEs of all of the BAs. CPS1 assigns each BA a share of the responsibility for controlling the interconnection's steady-state frequency. The CPS1 score is reported to NERC on a monthly basis and averaged over a 12-month moving window. A violation of CPS1 occurs whenever a BA's CPS1 score for the 12-month moving window falls below 100 percent.

active power control during the interconnection process so that renewable resources could be a part of the solution and avoid excessive curtailment due to ramping deficiencies.

The CAISO is experiencing rapid growth of solar energy. Their experience has informed the development of these recommendations in the following ways:

> As CAISO has seen increased solar generation penetration, these guidelines have been a valuable tool for CAISO. With over 12,000 MW of transmission and distributed connected solar resources within its footprint, the CAISO evaluates its net-load ramping needs on a monthly basis to evaluate the adequacy of its fleet make-up and recommend changes as necessary.
>
> Additionally, CAISO monitors its CPS1 scores on an hourly basis to ensure it does not unnecessarily lean on the interconnection during hours of greatest ramping needs. By evaluating its CPS1 score on an hourly basis, the CAISO was able to identify a strong correlation between significant intra-hour and multi-hour ramps and CPS1 excursions below 100 percent across the same time frame. As demonstrated by data, the CAISO maximum three-hour upward ramping need was approximately 6,000 MW in 2012. However, in 2016, the CAISO's three-hour upward ramping needs have already exceeded 10,800 MW.

The following section provides a guideline for evaluating ramping demands within a BA.

Recommended methodology for determining sufficient net demand ramping variability:

1. Calculate hourly and three-hour net-load upward and downward ramping magnitude to insure committed resources have the ramping capability to meet expected and unexpected changes within an operating hour. Multiple three-hour ramps are important for BAs with high penetrations of solar generation because of the higher ramping needs of the system during sunrise and sunset.
2. Determine the level of non-dispatchable resources within a BA's fleet, which can limit the amount of flexible resources that can be committed. Non-dispatchable resources can also be jointly owned resources, such as based loaded nuclear facility, which resides in another BA,
3. Evaluate the added impact of DER on ramping needs. High levels of DER can offset demand from the transmission system during sunrise and increase demand on the system during sunset.
4. Identify any bottlenecks on the transmission network that could result in congestion, which may require resources with adequate ramping capability on both sides of the congested path. If resources are needed as based-loaded resources, then ramping capability could be compromised.
5. Determine the impact of tracking vs. non tracking solar PV on ramping needs. This is required because faster ramping resources may have to be committed to deal with the higher ramping needs on the system from tracking solar PV resources,
6. Identify the headroom needed on "must run" resources to meet other real-time standards such as BAL-001, BAL-002 and BAL-003. Sufficient ramping capability has to be procured separately from this needed headroom. Ensure the ramp-rate of committed

DRAFT

resources are not double counted. For example, a resource providing energy and contingency reserve must be able to deliver both awarded contingency reserve and energy simultaneously.

~~6.~~

7. Evaluate the fleet ramping capability against ramping needs of the system to ensure the unit commitment software takes into consideration the speed of needed intra hour ramping capability as well as inter hour ramps. If ramping capability is always more than ramping needs, then the BA does not have a ramping concern.

~~8. Ensure the ramp-rate of committed resources are not double counted. For example, a resource providing energy and contingency reserve must be able to deliver both awarded contingency reserve and energy simultaneously.~~

~~9.~~8. Identify must run resources for local reliability requirement. For example, if based-loaded resources are needed to offset a transmission upgrade, then flexible capacity could be compromised,

~~10.~~9. BAs with unique operating characteristics, such as spring snow-melt resulting in high levels of hydro production, could result in hydro units operating close to their maximum capability because of the abundance of water or risk spilling water to maintain headroom on resources. During such operating conditions available flexible capacity could be compromised,

~~11.~~10. Commitment and dispatch may no longer be based solely on economics, since some level of ramps, inertia, and frequency response obligation (FRO) may need to be taken into consideration during the commitment and dispatch process.

BA Screening Test to determine if net ramping variability assessment should be done

1. Determine the amount of solar PV that's scheduled to be operational in a given year (Y_{SPV}),
2. Determine the expected Load (Y_{Load}) during sunset in a given year,
3. Determine the amount of wind production that's is expected during sunset in the given year (Y_{Wind}),
4. Determine expected minimum net-load for a given year (Y_{MNL}),
5. Determine the amount of non-dispatchable resources (Y_{ND}) that's expected to be operational on any given day,
6. Determine the maximum amount regulation up (Ru) requirement,
7. Determine the contingency reserve (CR) that's needed to cover the BA's MSSC,
8. Determine the minimum headroom ($Y_{Headroom}$) needed to meet BAL-003
9. Determine the maximum expected load increase ($Y_{Load\_Increase}$) that is expected to occur during sunset in the given year,

~~8.~~

Formatted: Font: (Default) Arial

Formatted: Normal, No bullets or numbering

DRAFT

Screening Tests to determine if a BA needs to submit data to NERC

Screen 1 (Y_{SPV} ≤ 10% of $Y_{\cancel{L}MNL\cancel{oad}}$) [10% is a placeholder at this time]

Where:

Y_{SPV} is the amount of solar PV that's scheduled to be operational in a given year, and

Y_{Load} is the expected load increase during sunset in a given year,

RS analysis of historical CPS1 hourly scores of a BA

a) CPS1 tends provided by the RS do not show any operational concerns for the BA,

   Action: The BA does not have to submit any data to NERC,

b) CPS1 trends provided by the RS reveal operational concerns such as a BA is experiencing low CPS1 scores below 100% on a consistent basis during certain hours,

   Action: The BA does not have to submit any data to NERC. However, the BA would have to take a closer look at its performance during the hours in question and take mitigating measures as necessary.

Screen 2 (Y_{SPV} > 10% of $Y_{\cancel{L}MNL\cancel{oad}}$)

If $Y_{SPV} + Y_{Load\text{-}Increase} \leq Y_{MNL} + Ru + CR + Y_{Headroom}$

Formatted: Subscript

$Y_{MNL} = Y_{Load} - Y_{SPV} - Y_{Wind} - Y_{ND}$

Where:

Y_{MNL} is the expected minimum net-load in a given year (Y_{ML})

$Y_{Load\text{-}increase}$ is the expected load increase during sunset in a given year,

Y_{SPV} is the amount of solar PV that's scheduled to be operational in a given year,

Y_{Wind} is the amount of wind production that's is expected during sunset in the given year (Y_{Wind}),

Y_{ND} is the amount of non-dispatchable resources ~~(Y_{ND})~~ that's expected to be operational on any given day,

RS analysis of historical CPS1 hourly scores of a BA

a) CPS1 tends provided by the RS do not show any operational concerns for the BA,
   Action: The BA does not have to submit any data to NERC,

DRAFT

b) CPS1 trends provided by the RS reveal operational concerns such as low CPS1 scores below 100% on a consistent basis during certain hours,

Action: The BA does not have to submit any data to NERC. However, the BA would have to take a closer look at its operational performance during the hours in question and take mitigating measures as necessary.

If $Y_{SPV} + Y_{Load\text{-}Increase} > Y_{MNL} + Ru + CR + Y_{Headroom}$

Formatted: Subscript

Action: The BA ~~, then the BA~~ has to submit expected ramping needs to NERC

Flowchart

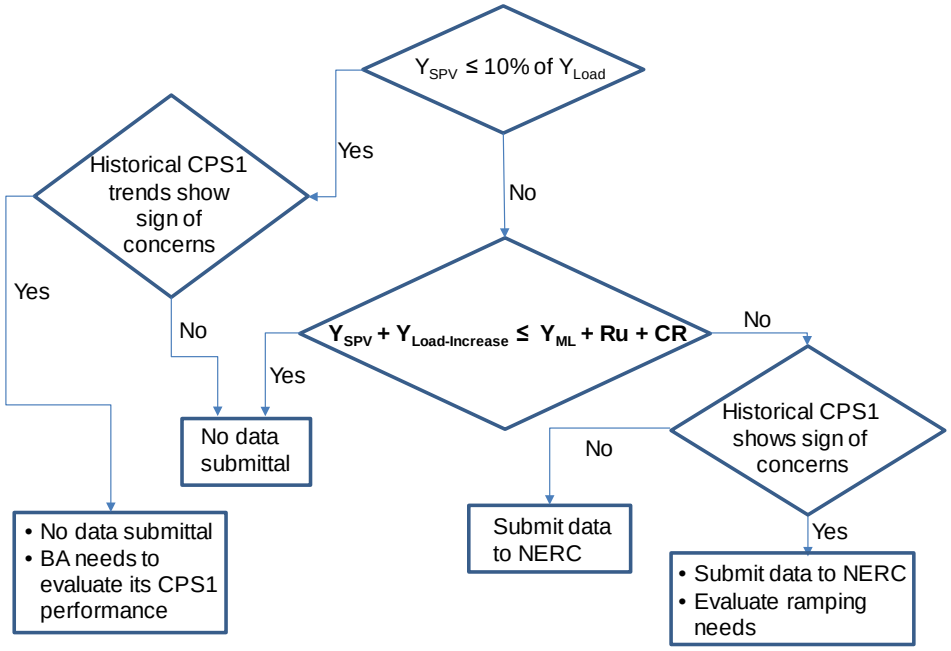

NERC
NORTH AMERICAN ELECTRIC RELIABILITY CORPORATION

Agenda
Distributed Energy Resources Workshop
Integrating Distributed Energy Resources while maintaining Bulk Power System Reliability

August 2, 2016 | 12:00 p.m. – 5:00 p.m. Eastern
August 3, 2016 | 8:00 a.m. – 12:00 p.m. Eastern

Some Hotel, Buckhead
XXXX Peachtree Road NE
Atlanta, GA 30326

Tuesday, August 2, 2016

12:00 – 1:00 Lunch

Day 1 | 1:00 – 5:00

1:00 – 1:10 Logistics and Safety

- Hotel Staff

1:10 – 1:25 Welcome Address

- Gerry Cauley, *NERC, President and CEO*

1:25 – 1:45 Keynote Speaker

Introduction: NERC/Industry Speaker?

- Technical justification for reliability of the BPS, don't focus on standards, net metering, etc.
- Trends in the industry
- Why do we care?

Topics for Panel

1) Aligning the Definition of DER – Panelist needed for expertise on NERC's Functional Model – Brian Evans-Mongeon Facilitator [DESCRIBE IN ONE SENTENCE THE PURPOSE OF THE PANEL]
   a. What is NERC's role? As ERO – considerations for this transition beyond 5-10 years? Projections. Acknowledge the transition we project – with DERs, modeling, etc. Start the discussion from technical perspective on what each function of DP, DOP will be like in future
   b. PUC/State perspectives
2) Load and Generation Modeling – How does the DER penetration impact transmission systems – Jason MacDowell, GE
   a. Dynamics Modeling
   b. Forecasting

   c. Planning Horizons
   d. Operating Horizons

3) Voltage and Frequency Performance & Essential Reliability Services – Pooja Shah Facilitator
4) Observability and Control – Charlie Smith Facilitator
   a. Operating Forecasting – dispatch of DERs, day ahead, real-time