Western Electricity Coordinating Council

Generating Facility Model Validation Requirements

Dynamic response validation

The essential principle of dynamic response validation is that the chosen model of the generating facility in the PSS/E or PSLF program must reproduce the results of tests or reproduce recorded disturbances within normally acceptable levels of accuracy.

This principle must be met by executing simulations of the tests or recorded system events in the PSS/E or PSLF program so as to demonstrate that:

- signals from the tests or recorded events are used as reference data
- clearly identifiable variations of input variables are presented to the model to impose the test or recorded disturbance on the model
- the result signals obtained from the simulation are compared to and agree with the reference data

The measure of success of the validation is the quality of the agreement between the recorded and simulated results. Important response characteristics include the following:

- general shape of the curves, including magnitude and rate of the response;
- rise time, overshoot and bandwidth;
- dead-bands and delays;
- initial and final values.

Option 1. Validation using Recordings taken at the Point of Interconnection of the Generating Facility.

Validation is performed using disturbance recordings taken at the Point Of Interconnection (POI) of the Generating Facility (see Figure 1).

The dynamic response of the Generating Facility is driven by the voltage and frequency at the POI and the control inputs (e.g. due to voltage and power schedules from the Control Area Operator).

The POI voltage (V), POI frequency (f), and the unit control signals are used as the model inputs. The real (P) and reactive (Q) power are the measures of the model performance. The validation shall be done for events of voltage and frequency deviations and oscillations at the point of interconnection.

The minimum sampling rate is 20 samples per second. The minimum disturbance record length is 30 seconds.

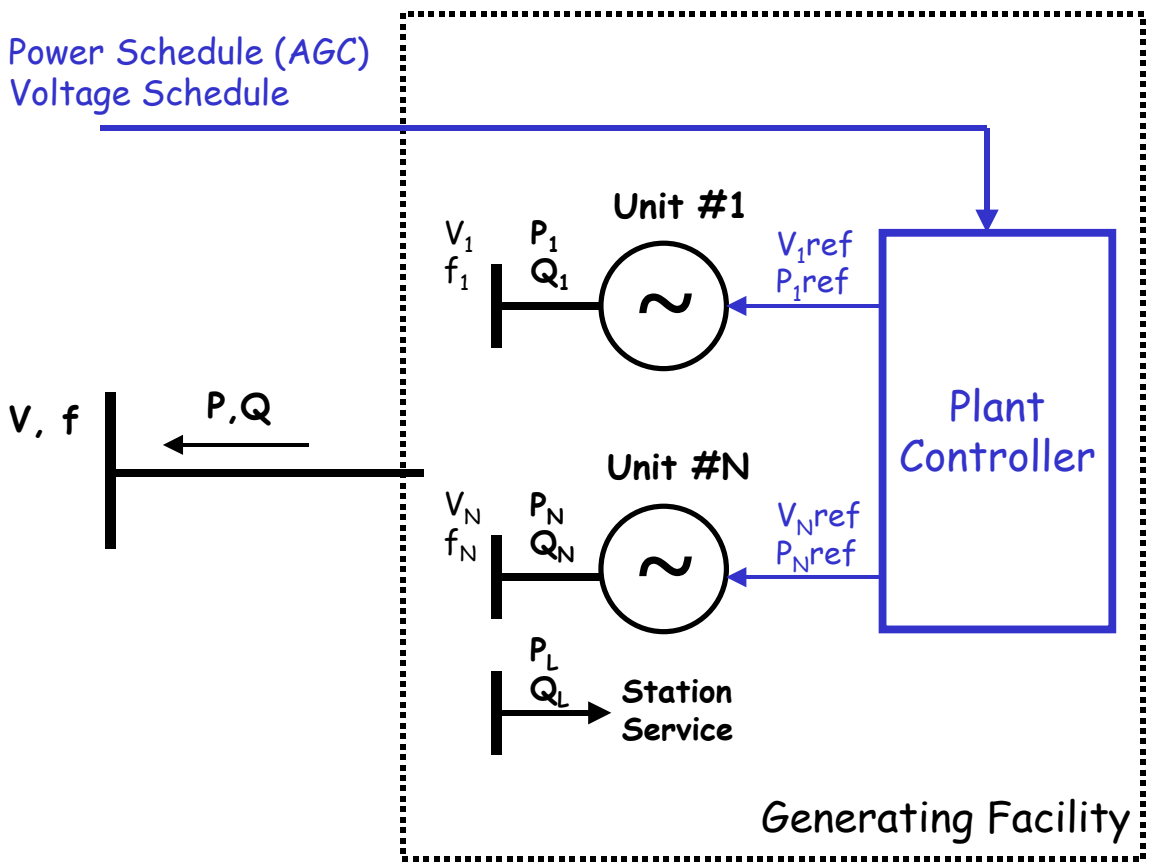

Figure 1: validation performed using disturbance recordings taken at the Generating Facility POI

Acceptable validation methods for generator – excitation models:

Event	Input to Model	Validation Signal
(i) Sudden change in voltage at point of interconnection (greater than 2%) due to a disturbance	- voltage at point of interconnection - frequency at point of interconnection - control signals	- power at point of interconnection - reactive power at point of interconnection
(ii) Sudden change in Generator reactive power (greater than 10% of rated MVA) due to a disturbance	- voltage at point of interconnection - frequency at point of interconnection - control signals	- power at point of interconnection - reactive power at point of interconnection

Acceptable validation methods for governor-turbine models:

Event	Input to Model	Validation Signal
(i) Sudden frequency changes (greater than 0.05 Hz) due to disturbance	- frequency at point of interconnection - control signals	- power at point of interconnection

Examples of governor response validation are described in the following IEEE papers:

1. Les Pereira, John Undrill, Dmitry Kosterev, Donald Davies and Shawn Patterson, “A New Thermal Governor Modeling in WECC,” *IEEE Transactions on Power Systems*, vol.18, no.2, pp.819-829, May 2003.

2. Les Pereira, Dmitry Kosterev, Donald Davies and Shawn Patterson, “New Thermal Governor Model Selection and Validation in the WECC,” *IEEE Transactions on Power Systems*, vol.19, no.1, pp.517-523, February 2004.

3. Dmitry Kosterev, “Hydro Turbine-Governor Model Validation in Pacific Northwest,” IEEE Transactions on Power Systems, vol.19, no.2, pp.1144-1149, May 2004.

Option 2. Validation using Recordings taken at the Generating Unit.

Validation is performed using disturbance and/or test recordings taken at the Generator (see Figure 2). This should be done for every Generator in the Generating Facility.

The dynamic response of the Generator is driven by the stator voltage and frequency (or real and reactive load). The response can be also initiated by the control inputs such as voltage reference and speed reference.

Validation shall be done for the following events:
a) disturbances or tests that result in generator stator voltage and reactive power changes.
b) disturbances that result in generator frequency changes or tests that result in generator real power changes.

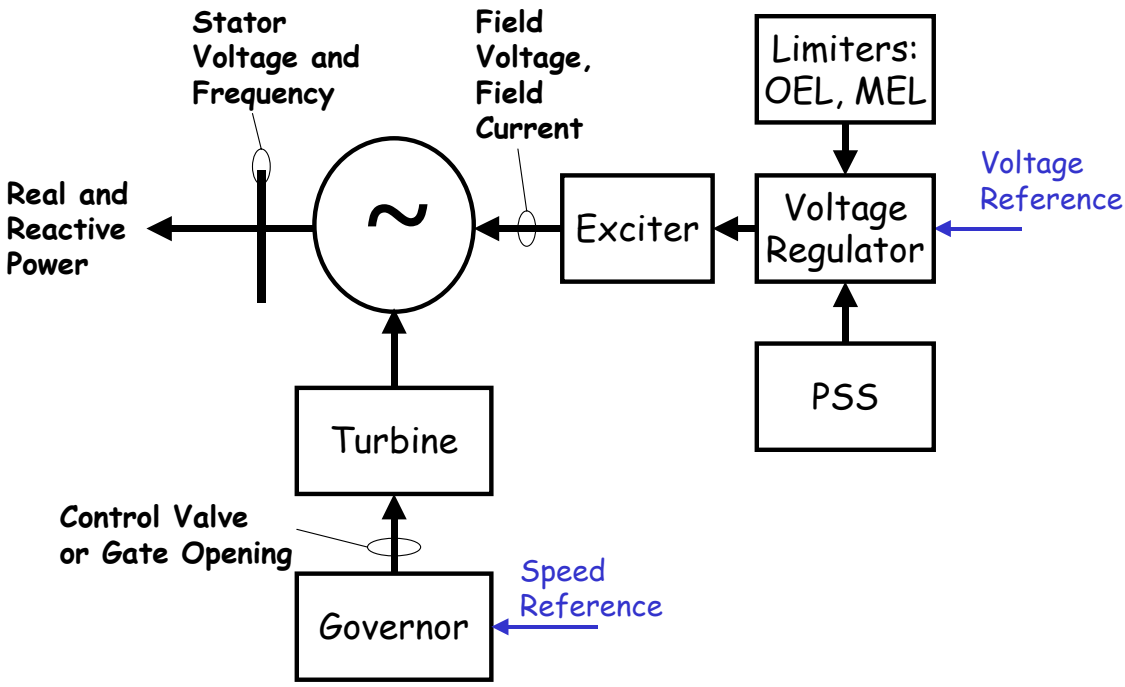

Figure 2: Validation is performed using disturbance and test recordings taken at the Generator

Acceptable validation methods for generator – excitation models:

Event	Input to Model	Validation Signal
(i) Voltage Reference step (typically 2%) with Generator on-line	- Voltage reference step - Generator real power - Generator reactive power	- Stator Voltage - Field Voltage (or Exciter Field Current for rotating exciters)
(ii) Voltage Reference step (typically 2%) with Generator off-line	- Voltage reference step	- Stator Voltage - Field Voltage (or Exciter Field Current for rotating exciters)
(iii) Sudden change in Generator reactive power (greater than 10% of rated MVA) due to a disturbance with Generator on-line	- Generator real power - Generator reactive power	- Stator Voltage - Field Voltage (or Exciter Field Current for rotating exciters)
(iv) reactive load rejection	- Generator reactive power	- Stator Voltage - Field Voltage (or Exciter Field Current for rotating exciters)
(v) Frequency response of Vt/ Vref	- Voltage reference swept sine	- Stator Voltage

The minimum sampling rate is 20 samples per second.

Acceptable validation methods for governor-turbine models:

Event	Input to Model	Validation Signal
(i) Speed Reference steps with generator on-line	- Speed Reference - Frequency	- Generator real power
(ii) Sudden frequency changes (greater than 0.05 Hz) due to disturbance with Generator on-line	- Frequency	- Generator real power

The maximum sampling period is 4 seconds – data available from SCADA or plant DCS.